Satellite Systems Design/Simulation Environment: A Systems Approach to Pre-Phase A Design

Melvin J. Ferebee, Jr., Patrick A. Troutman, Donald W. Monell
NASA Langley Research Center, Hampton, Virginia

AIAA Paper No. 97-0231

34th AIAA Aerospace Sciences Meeting and Exhibit

January 6-9, 1997, Reno, Nevada

Abstract

A toolset for the rapid development of small satellite systems has been created. The objective of this tool is to support the definition of spacecraft mission concepts to satisfy a given set of mission and instrument requirements. The toolset will perform the following functions:

- Using instrument performance and mission requirements as input, a design and sizing module will define a concept for a satellite configuration, including all subsystems, which will satisfy those requirements. Each subsystem will be defined to component levels consisting of estimated technical characteristics and resource requirements. Actual components may then be identified using a component level database or design output may go directly to the simulation module for analysis. This module is developed in Microsoft Excel, thus enhancing portability of the module.

- Given the design/sizing data generated, a simulation module will analyze the operational system by simulating resource interaction as a function of time. This will be accomplished by creating a virtual spacecraft environment in which to operate the spacecraft. This tool will identify operational interaction conflicts among subsystems. The simulation module also has the capability to simulate failure modes. The simulation module is developed using object-oriented system modeling tool, MATLAB Simulink.

- Using the satellite definition, a costing model will determine Rough Order of Magnitude (ROM) subsystem costs based on component level costs and will allow comparison of relative costs of different designs and different technologies.

The primary function of the Spacecraft Systems Design & Simulation Environment (SSDSE) is to assist in designing, sizing, simulating, and costing satellite systems based on mission/payload requirements and current/advanced satellite systems data. There are four core modules to SSDSE, as shown in Figure 1. The System Design and Sizing Module is where the concept definition begins. Given a set of mission/payload requirements and constraints the System Design and Sizing Module synthesizes subsystem characteristics. The System Resource Simulation Module utilizes the newly generated subsystem characteristics parameters to perform an integrated timed simulation of the spacecraft systems to identify resource bottlenecks or inadequacies resulting from simple assumptions in the System Design and Sizing Module. Adjustments are then made in the subsystem characteristics to eliminate the problems identified in the simulation. The Component Level Database can then be used to identify actual candidate system components based on the subsystem characteristics definition or to flag areas where there may be technology tall poles or where components with the required characteristics do not exist or for which the data is not available. The Component Level Database could, alternately, be used as a starting template for the design process based on historical mission/system data. Once a detailed satellite description has been generated, the Costing Module is then utilized to determine funding requirements for the concept. Adjustments in mission requirements and technology assumptions can then be changed and the cycle repeated. Once a spacecraft concept has been designed/sized and then evaluated with the system simulation module, a cost analysis will be required. Cost analysis output should include development, manufacturing, and operational phases of the spacecraft. The basis of the cost estimating should be derived directly from the output of the design/sizing module and/or the component level database. The ability to assess the effect of different bus or sensor technologies, changes in procurement and launch schedules as well as operational strategies should be included in the costing capabilities.

The objective of this report is to provide an introduction to understanding and using the SMALLSAT Model. SMALLSAT is a computer-aided Phase A design and technology evaluation tool for small satellites. SMALLSAT enables satellite designers, mission planners, and technology program managers to observe the likely consequences of their decisions in terms of satellite configuration, non-recurring and recurring cost, and mission life cycle costs and availability statistics. It was developed by Princeton Synergetics, Inc. and User Systems, Inc. as a revision of the previous TECHSAT Phase A design tool, which modeled medium-sized Earth observation satellites. Both TECHSAT and SMALLSAT were developed for NASA.

SMALLSAT: The Design and Sizing tool. In SMALLSAT, a satellite is configured in terms of sensor attributes, such as dynamic mass, dimensions, data and power profiles, and pointing and stabilization requirements, and bus subsystem technology. SMALLSAT models the satellite in terms of nine subsystems: attitude reference and control, power, thermal, orbital maintenance, propulsion, data handling, on-board computer, TT&C, and structure. The design of these subsystems is iterated so as to take into account their mass and power interactions.

SMALLSAT contains sensor, launch vehicle, and bus subsystem technology databases. The user can select input from these databases during satellite configuration. The user can also selectively override this input to model new technology developments. This enables analysis of technology impacts on satellite configuration and costing. For example, launch vehicles can either be selected from the database, in which case they place constraints on satellite configuration, or they can be selected based upon the resulting satellite configuration. Modifying launch vehicle attributes allows the effect of new launch capability to be ascertained in terms of satellite configuration and cost, and mission life cycle cost. In addition, bus subsystem technology levels, such as solar cell efficiency, can be selectively altered to reflect likely technology advances or the technology advance that is sought through a specific technology program. This will allow the likely effects of technology programs to be observed in terms of satellite configuration, cost, and the ability to switch launch vehicles.

The impact of the resulting satellite configuration on mission life cycle cost and sensor availability statistics may also be determined using SMALLSAT. A set of cost estimating relationships (specifically developed for small satellites by the Aerospace Corp.) contained within SMALLSAT is utilized to provide estimates of both non-recurring and unit recurring costs at the subsystem level. The estimated costs may be selectively overridden by specifying expected values or standard deviation, or both. This allows the uncertainty of costing associated with the introduction of new technology to be explicitly and quantitatively considered. An integrated Monte Carlo simulation model determines the resulting life cycle cost and availability statistics based on user-specified mission parameters such as

number of satellites required, their desired launch dates, satellite sparing and replacement strategies, and cost spreading functions.

The SMALLSAT Model is an integration of Microsoft Excel and FORTRAN (compiled code) software operating within the Microsoft Windows environment on personal computers. For satellite designers, SMALLSAT can be used to provide preliminary configuration and cost estimates and can provide information for launch vehicle selection. It can provide a rapid and flexible approach for assessing the implication of different combinations of sensors on satellite configuration and cost.

For technology program planners, SMALLSAT provides the ability to assess the potential impacts of investments in sensor and spacecraft bus technology development programs. The impacts of the technology programs can be measured in terms of resulting spacecraft configuration and cost changes, changes in launch vehicle requirements (for example, the ability to utilize a smaller launch vehicle), and changes in mission life cycle cost and sensor availability statistics.

For mission planners, SMALLSAT provides the ability to rapidly configure Earth observation satellites and missions utilizing satellites with different combinations of sensors. SMALLSAT can provide estimates of satellite configuration and cost and mission life cycle cost and sensor availability statistics.

The SMALLSAT Model. SMALLSAT is a computer-aided Phase A design and technology evaluation tool for small satellites. "Small" refers to satellites ranging from those in the 200 kg class, to those that can be manifested on vehicles less than the capability of a Delta. SMALLSAT enables satellite designers, mission planners, and technology program managers to observe the likely consequences of their decisions in terms of satellite configuration, non-recurring and recurring cost, and mission life cycle costs and availability statistics.

SMALLSAT employs a pull-down menu structure to lead the user through the system. The starting point is specification of mission parameters beginning with the launch vehicle destination (parking orbit, inclination and altitude) and the final location and lifetime that the satellite subsystems are to achieve. The next step is the specification of the payload which is accomplished by selecting (and modifying as deemed to be necessary) a mix of sensors from the payload (sensor) database. Up to five sensors may be selected having attributes such as electronics mass, aperture mass and dynamics, physical dimensions, pointing accuracy, data and power operating profiles, as well as other attributes. These attributes may be used as provided or altered to reflect a new sensor configuration. The satellite is then configured in terms of these sensor attributes which impose a set of requirements upon the satellite bus. In other words, the bus is configured to fly the identified sensors.

SMALLSAT models the satellite in terms of eight subsystems: attitude reference and control, power, thermal, orbital maintenance & propulsion, command & data handling, TT&C, and structure. Each of these subsystems is characterized as a set of design equations. A combination of sensor requirements, user-input data provided in response to computer generated queries and user overrides of database data and results of model calculations, and database data serve as the source of information used in the design equations.

SMALLSAT contains sensor, satellite, launch vehicle, and subsystem technology databases. The user can select input from these databases during satellite configuration. The user can also selectively override this input to model new technology developments. This enables analysis of technology impacts on satellite configuration and costing. Modifying launch vehicle attributes allows the effect of new launch capability to be ascertained in terms of satellite configuration and cost, and mission life cycle cost. In addition, subsystem technology levels, such as solar cell efficiency, can be selectively altered to reflect likely technology advances or the technology advance that is sought through a specific technology program. This will allow the likely effects of technology programs to be observed in terms of satellite configuration, cost, and the ability to switch launch vehicles.

The impact of the resulting satellite configuration on mission life cycle cost and sensor availability statistics may also be determined using SMALLSAT. A set of cost estimating relationships (specifically developed for small satellites by the Aerospace Corp.) contained within SMALLSAT is utilized to provide estimates of both non-recurring and unit recurring costs at the subsystem level. SMALLSAT calculates the variables that are used in the cost estimating relationships (CERs). The estimated costs may be selectively overridden by specifying expected values or standard deviation, or both. This allows the uncertainty of costing associated with the introduction of new technology to be explicitly and quantitatively considered. The approach for considering uncertainty is described in detail in Appendix G.

An integrated Monte Carlo simulation model, SATCAV,[1] determines the resulting life cycle cost and availability statistics based on user-specified mission parameters such as number of satellites required, their desired launch dates, satellite sparing and replacement strategies, and cost spreading functions. Satellite non-recurring and recurring cost data and launch vehicle cost data are provided over a seamless interface to the life cycle costing model that develops annual cost and present value of life cycle cost statistics, annual event statistics, sensor availability statistics and other related information.

SMALLSAT contains a number of databases. These include databases that relate to sensors (i.e., payloads), satellites, power, atmospheric density, fuel, attitude reference and control, and launch vehicle performance. The sensor database contains information on over 100 sensors. Up to five of these may be selected to form the specific payload for the small satellite that is being designed. As these sensors are selected, the values of the associated sensor attributes (i.e., power, data rate, dimensions, etc.) are input into the input stream. Each of the attributes may be over-ridden (i.e., changed) to reflect sensor design changes or to simulate technology changes. Almost everywhere in the model, input and output values can and may be overridden. This is an essential feature of the model. The ability to override values enables the engineers and scientists to

---

[1] **SMALLSAT** includes Princeton Synergetics, Inc. (PSI) proprietary software, denoted as **SATCAV**, that is used for performing life cycle cost and sensor availability analyses. **SATCAV** is not to be copied without express written authorization from Princeton Synergetics, Inc. **SMALLSAT** is configured so that the satellite design and costing functions can be performed without having **SATCAV**. **SATCAV** (in the form of compiled FORTRAN code) is commercially available and can be obtained from PSI with instructions for its installation into **SMALLSAT.**

be innovative as well as customize the system to further satisfy their requirements.

Spacecraft Subsystem Models The SMALLSAT Model contains eight integrated subsystem design models (Propulsion & Orbit maintenance, Attitude Reference & Control, Power, Thermal, Data Handling, On-Board Computer, TT&C, and Structure) and associated databases (see above). The mission specification, in the form of launch vehicle destination and satellite life, and payload specification, in the form of data and power operating profiles, dynamic mass, pointing accuracy, stability, etc., place requirements upon the various subsystems that comprise the satellite that is to be configured with SMALLSAT.

The Attitude Reference and Control System (ARC) model establishes the stabilization methods that may be appropriate based upon mission and payload inputs. The selected stabilization method identifies the number of reaction wheels, momentum wheels, magnetic torquers, IRUs, sun sensors, star sensors, Earth sensors and magnetometers that are required. As in most instances, the model developed results may be over-ridden by user inputs. The final result is the determination of the ARC actuators and sensors and attitude sensor mass, attitude control mass, and overall subsystem mass.

The Power subsystem supplies electrical power to the satellite, then store, regulates and distributes the power. SMALLSAT calculates the subsystem mass by taking the satellites end-of-life (EOL) power and works backward to determine the satellites beginning-of-life (BOL) power requirements. When the BOL power is known, SMALLSAT sizes the solar array, batteries and power distribution system. Solar cell BOL watts/area and watts/mass are selected from tables which lists average values for solar cell types. These values may be over-ridden when desired. Solar array sizing takes into account sun incidence angle, battery type, eclipse cycle, power duty cycle, stabilization method, and other related factors. The final result is the determination of BOL and EOL power and power subsystem mass.

The spacecraft thermal subsystem is used to heat and cool the spacecraft and payload components. A combination of active and passive methods may be used to achieve thermal requirements. The Thermal subsystem mass is calculated as a percentage of spacecraft dry mass and is based upon historic satellite data. Special thermal systems such as cryogenic coolers are not accounted for and should be added as payload if required.

The satellite propulsion subsystem is used to take the spacecraft from a parking orbit to a final orbit. The spacecraft design may integrate the propulsion subsystem with the orbital maintenance subsystem or may choose a "stand-alone" stage for the perigee kick from a transfer orbit. The propulsion subsystem calculates the fuel mass (based upon a selection of fuel type and associated specific impulse) required to transfer from an initial parking orbit to the final satellite orbit and propellant tank and thruster mass.

The Orbital Maintenance subsystem calculates the amount of propellant needed to keep the satellite in the desired orbit. Propellant mass takes into account the specific impulse of the propellant (selected from a database or over-ridden). Atmospheric density (a function of solar state and satellite altitude) is taken into account as is the satellite ballistic coefficient. For GEO missions, North/South and East/West stationkeeping requirements are considered and are the result of Sun and Moon gravitational effects as well as non-uniformity of the Earth's gravitational field.

The Data Handling subsystem collects data from the sensors and sends the data to the ground. The collected data may be transmitted as it is collected or recorded for later transmission. Data transmission may be either direct to a ground station and/or to a ground station via a communication satellite, such as TDRSS. Based upon a selected downlink method and frequencies and the use of on-board recorders, SMALLSAT calculates the downlink rate (Kbps) and establishes downlink options from which the user may select. SMALLSAT then calculates the subsystem weight and power requirements using a database of historic transponder, antenna and recorder weights.

The Tracking, Telemetry and Control (TT&C) subsystem usually has a low data rate (1 - 2 Kbps) with the data sent using the same downlinks as the sensor data. If the composite sensor data rate is low, SMALLSAT recognizes that it can be accommodated by the TT&C subsystem. If the composite data rate is high, SMALLSAT recognizes that another channel is required in the data handling subsystem. User input data relating to frequency band is used in conjunction with a look-up table to establish estimates of subsystem mass and power.

Finally, SMALLSAT calculates the mass of the satellite structure as a percentage of the satellite wet mass. The structure mass is also influenced by payload dynamics and operating power level.

Since the determination of the mass of a spacecraft subsystem depends upon the mass of each of the other subsystems (for example, ARC mass will depend upon sensor requirements as well as the mass of all other subsystems), SMALLSAT employs an iterative approach for establishing subsystem masses. In other words, as each subsystem is designed, all known masses are taken into account. Upon completion of the design of all subsystems, an iteration process may be initiated whereby the mass of each subsystem is recalculated taking into account updated knowledge of the masses of all other subsystems. This cycle is repeated until the mass computations converge.

Cost Estimating Relationships. The cost estimating relationships utilized in the SMALLSAT Model are based upon those developed by the Aerospace Corporation.[2]

The basic concept underlying the development of cost estimating relationships is that cost is a function of one or more physical attributes of the item being costed and that this relationship is similar to or the same as that of other similar items. For example, the cost of a new satellite's attitude control subsystem is related to its mass in the same way that previously developed spacecraft attitude control subsystem costs are related to their mass. The development of CERs requires the development of a database of comparable costs for a number (hopefully large) of previously developed satellites and associated subsystems. A regression analysis is performed on the data to identify explanatory variables and to then develop a functional relationship between these variables and non-recurring and unit recurring cost.

2 Subsystem-level small satellite CERs provided to Princeton Synergetics, Inc. by the Aerospace Corporation on February 7, 1995.

Care must be taken with the use of the CERs since they are based upon historical data which may not be appropriate for use in estimating the cost of subsystems utilizing new technology. For example, the CERs predict that mass reduction will lead to cost reduction; this may not always be the case. In order to allow for this possibility, the CER derived cost results may be overridden and estimates provided (at the subsystem level) of its expected cost and its associated standard deviation.

Valid ranges of all variables (as developed by the Aerospace Corp. based upon their database) are indicated for each of the developed CERs. Because the developed CERs are based upon the lower end of the small satellite range (as considered by SMALLSAT), there is a distinct possibility that SMALLSAT will calculate values for one or more variables that are outside of the valid ranges considered by the CERs. When this occurs, SMALLSAT calculates the cost according to the CERs but indicates to the user that a potential problem may exist by changing the color of the cell containing the computed cost from green (indicating that no problem exists) to red.

The results of the CERs are a set of estimates of non-recurring and recurring costs, by subsystem. Revisions may be made to these expected value estimates and standard deviations may be added. The total expected S/C bus non-recurring and recurring costs are the sums of the subsystem costs. Payload and payload integration costs are added to arrive at total expected satellite costs and standard deviations that may then be used in the life cycle cost analysis.

The CERs are mostly based on the mass of subsystems. As subsystems associated with smaller and smaller spacecraft are created. The CERs quickly become invalid. The Aerospace Corporation is currently developing CERs based of subsystem performance and not its mass.

Life Cycle Cost Analysis. A life cycle cost and availability model, SATCAV, is seamlessly linked to the Excel spreadsheet design model. This provides the user with the ability to observe the likely consequences of design choices and technology assumptions on mission life cycle costs and sensor availability statistics. SATCAV[3] is a dynamic stochastic life cycle cost and availability model that simulates the launch and on-orbit operations associated with the initiation and continuing operation of a generalized space mission comprising multiple satellites with multiple sensors.

SPASIM: The Spacecraft Resource Simulator. The primary function of the SPAcecraft SIMulation (SPASIM) software is to simulate over time the utilization of resources during the operation of a spacecraft. SPASIM presents this virtual environment to the user in a graphical, object-oriented interface geared to enhance usability and integration.

SPASIM can be used to validate spacecraft design and sizing estimates by performing an integrated time simulation of the spacecraft systems using three primary resources: power, data and propellant. This simulation can be used to identify resource bottlenecks or inadequacies resulting from assumptions made in the operational scenario of the spacecraft. Since SPASIM is a time-based simulation, discrete events and duty cycles can be modeled and assessed across all spacecraft systems. Failure modes and operational contingencies can be evaluated allowing the analyst to optimize the spacecraft performance for a range of mission scenarios. The SPASIM interface allows the analyst to easily change system functional architectures via block diagrams and to easily update performance characteristics of system components with parameter input menus. SPASIM defines a set of system functional/architecture block diagrams wired together along with parameters that describe operational and performance characteristics that yields a well documented functional spacecraft model.

Each block within a GUI window defines a function through a hierarchy of lower level blocks. Blocks at the lowest level invoke MATLAB® code or externally-defined functions. The GUI presents a dialog box to the user that allows changes to be made to a block's parameters before simulation starts. By changing appropriate parameters in a model, the user can assess the impacts of using different technologies. Lines connecting the blocks represent the flow of resources such as power, data, and thermal energy and propellant.

The user can analyze subsystem interactions during a simulation by displaying real-time plots of any block's input or output values. A large selection of predefined plots are included in the simulator. Using the scope block in Simulink, additional graphs may be displayed in order to gain further insight into the subsystems.

SPASIM includes a small library of models of spacecraft subsystems and components. SPASIM's system resource simulation has six subsystem models: Power, Thermal, Propulsion, Guidance Navigation and Control (GN&C), Communication and Tracking (C&T), and Command and Data Handling (C&DH). Payload instruments are modeled based on their resource usage requirements and duty cycles. They communicate resource requests to the spacecraft through a standard interface.

Usage Requirements SPASIM is composed of two types of programs: user interface programs and external routines. The user interface programs are MATLAB® scripts that include MATLAB® commands and SIMULINK® files. Both the internal MATLAB® code and the MATLAB® scripting language are hardware independent, available on various platforms such as SGI, PC, Mac, and Sun. The external routines are written in ANSI standard C and must be compiled each time SPASIM is moved to a different platform.

Technical Description SPASIM is a collection of MATLAB User Interface Programs and External Routines (ANSI C procedures compiled into MATLAB EXecutible "MEX" files) that run under the standard MATLAB environment. The SIMULINK Tool box is required to run SPASIM.

There are seven systems described in the following subsections. Each section describes the default input values and the architecture of the schematic design for a system.

1. Payload
2. Power System
3. Thermal System
4. Propulsion System
5. Guidance Navigation and Control System
6. Communications and Tracking System
7. Command and Data Handling System

[3] SATCAV, developed by Princeton Synergetics, Inc., is a proprietary software product of PSI. For inclusion in SMALLSAT, SATCAV has been modified so as to eliminate a number of unnecessary operational modes (such as on-orbit servicing and repair at a transportation node). Basically, all other features remain intact.

The system schematic for the spacecraft bus can be seen in Figure 2.

The Payload Block serves as an interface between the payloads and the Bus. The default spacecraft modeled in SPASIM is a spacecraft in development by the US Government. There are four payloads on this spacecraft represented by the block diagram in Figure 3. Spacecraft Bus requirements from the Bus flow in from the left. The resource requirements are filtered through the four payloads which add and subtract from the flow. Finally the resource stream is concatenated and fed back to the spacecraft bus as payload resource requirements.

Payload Description. Each of the four instruments in the block share a common type of interface with the spacecraft. The block diagram a typical payload is shown Figure 4. This is a typical functional schematic for a spacecraft resource model of an instrument. The spacecraft bus requirements flow in from the left into a demultiplexer and resources are deconvolved to be available for the instrument to use. The altimeter has a nominal power rating of 75.5 watts. This is modeled as a constant block which feeds into the power port on the resource multiplexer. Also, the nominal data stream is modeled as 152 bit word plus a Vehicle Time Code Word divided by the number of samples per second to yield a bit per second rate for the Altimeter. A second mode of operation is modeled directly below, but it is not implemented. Thus an alternate data generation is available to be connected to simulate a major calibration period. The power and data resource streams are modeled and feed into the Combination Multiplexer, which in turn feeds these resource requirements back to the spacecraft bus.

Power Subsystem. The power subsystem is a graphical model of a generic power system. Power is a managed resource within this model, and it includes the following components:

Solar Array
Charge Unit
Battery
Spacecraft Power Requirements
Internal Power Consumption
Logic to Evaluate Power Levels
Other Power Subsystem Requirements

Error! Reference source not found. is a top-level schematic of the power subsystem hierarchy, containing each of the above components. The following sections describe the contents and functions of these components, as well as the interactions between them.

The Power System is initialized by values from a default file which the user can modify through the power parameters menu or by editing the defaults file directly.

These variables are set at the beginning of the simulation. The values of the variables are constant during the simulation. Calculated values are dependent on the model of the system.

Solar Arrays. The schematic of the solar array, Figure 6, includes five functional components:

- Orbital Information
- Default Parameters
- Solar Array Pointing Program
- Solar Array Shadow Table
- Other Default Values

The Orbit Parameters enter via an input port on the left. The instantaneous orbital radius, true anomaly, and eccentricity are combined with default initial parameters for the solar array and are passed to the Array Pointing Algorithm in the "Array Power" function block. This algorithm uses default initial parameters (Argument of Perigee, Right Ascension, Inclination, Start Date, Epoch Date, and Inertial Attitude) along with time-varying parameters to point the solar array normal vector as close as possible toward the sun. The algorithm uses the current position and attitude of the spacecraft to point the array, subject to the number of degrees of freedom that the user has specified in the Power Defaults Menu. The output of the function is a three component vector that includes: the cosine of the angle between the solar array normal and the spacecraft-sun direction, and the alpha and beta angles from the spacecraft to the sun (Kumar and Heck). The alpha and beta angles are used as inputs for the Shadow Table. The Shadow Table is an ASCII file, loaded before the start of the simulation, and used by a two-dimensional look-up function in SIMULINK. This look-up function linearly interpolates the fraction (0.0 to 1.0) of the solar array area available at specific alpha and beta angles for the spacecraft in a nominal LVLH flight attitude. The maximum current power is calculated from the following: array area, solar cell efficiency, user-entered Solar Flux (default is yearly average flux: 1327 W/m^2), solar cell degradation, radiation, atomic oxygen, etc., and an initial on-orbit power factor.

The calculated array pointing values and the results of the shadow table lookup are combined with the value of the maximum current power calculation, which results in total instantaneous power of the solar array. This value is the output of the Solar Array block.

9. Other Power Systems Requirements of Bus

The Power system manages the Power for the spacecraft. The Power System is currently adding to the power resource stream and the data resource stream. The previous stream is discussed above. The latter is a single constant place holder for data that could be generated by the charging unit as an example.

In all, each of the subsystems has been implemented in the simulation. Output is that of time-based simulations of the resource (data, power and/or propellant) as it is either created or utilized during the mission.

System Outputs. SPASIM's outputs are those of a series of time-histories of spacecraft events. A sample of these events are: Thruster firings, propellant usage, battery depth of discharge, communication slant range, data buffer usage, attitude euler angles and orbital ground track. There are over 30 standard outputs that can be menu-selected. In addition, one can place "scopes", pre-formatted output plots, at any output port in any subsystem thus allowing flexibility in the simulator for the user to exploit.

An Example Case

The spacecraft and sensors branch at NASA Langley performed a phase A study of an electronically scanning thinned-array radiometer (ESTAR)

Table 1 shows the following inputs provided by ESTAR for SMALLSAT.
The results of these inputs are compared with the results of the Phase A study in Table 2.

Although the mass and power values are within 15% of the Phase A Estimate, a further investigation of the subsystem mass and power values show that there are fluctuations of greater than 30%. This can be explained due to the design methods of the group. By this, SMALLSAT is NOT meant to be an all-in-all program that produces a spacecraft point design given mission and subsystem requirements. Both the simulator and the design and sizing routines presented here a but a tool to reduce the time and effort spent in this particular design phase. Ingenuity can not be captured in algorithms nor should it be. The innovativeness of the designers and the design team is what is necessary for a feasible and attractive design.

Summary

The primary function of the SSDSE is to assist in designing, sizing and simulating satellite systems based on mission and payload requirements and current/advanced satellite systems data. There are three core SSDSE modules.

The System Design and Sizing Module is where the concept definition begins. Given a set of mission/payload requirements and constraints the System Design and Sizing Module synthesizes subsystem characteristics.

The System Resource Simulation Module utilizes the newly generated subsystem characteristics parameters to perform an integrated timed simulation of the spacecraft systems to identify resource bottlenecks or inadequacies resulting from simple assumptions in the System Design and Sizing Module. Adjustments are then made in the subsystem characteristics to eliminate the problems identified in the simulation.

The Component Level Database is then used to identify actual candidate system components based on the subsystem characteristics definition or to flag technology tall polls if components with the required characteristics do not exist. The Component Level Database could also be used as a starting template for the design process based on historical mission/system data.

Once a detailed satellite description has been generated, the Costing Module is utilized to assess whether the concept design falls within funding allocations. Adjustments in mission requirements and technology assumptions can then be changed and the cycle repeated.

Given an actual Phase A analysis, the design and sizing module can estimate spacecraft mass and power to within 15%. As with any tool, this is not an expert system. The designers are the experts. The tool is merely an instrument to perform the interdisciplinary analyses in an organized and timely fashion. Innovation and Ingenuity are left to the designer.

Table 1. ESTAR Mission Parameters Input into SMALLSAT

SMALLSAT Inputs provided by ESTAR	
Operational Altitude	402 km
Inclination	sunsynch. (97.03 deg)
Launch Vehicle	Taurus
Pointing Accuracy	0.3 deg
Launch Year	1998
Mission Lifetime	3 years
Payload	L-Band Radiometer
Pointing Knowledge	0.02 deg, continuous
Momentum Device	Momentum Wheel
Solar Cell	GaAs
Payload Data Rate	2.5 GBit/orbit

Table 2. Comparison between SMALLSAT and Phase A Study

	SMALLSAT Mass, kg	Default Mass, kg	SMALLSAT Power, W	Default Power, W
Experiment	**178.0**	**178.43**	**249**	**248.21**
Spacecraft				
Data Management	**31.2**	**33.76**	**93**	**106.59**
Orbit Determination	**11.2**	**2.41**	**27.76**	**4.18**
Structure	**55**	**51.87**	**0.00**	**0.00**
Ordinance	**0.00**	**9.29**	**0.00**	**0.00**
Thermal	**15**	**6.01**	**31.57**	**16.5**
Communications	**16.2**	**13.65**	**38.0**	**39.88**
Propulsion	**9**	**17.43**	**4**	**3.99**
Electrical Power	**162**	**99.67**	**30.6**	**28.70**
Attitude Control	**21.83**	**20.20**	**52.0**	**25.15**
Expendables	**98.3**	**102.45**		**0.00**
Totals	**597.73**	**535.17**	**525.93**	**473.20**

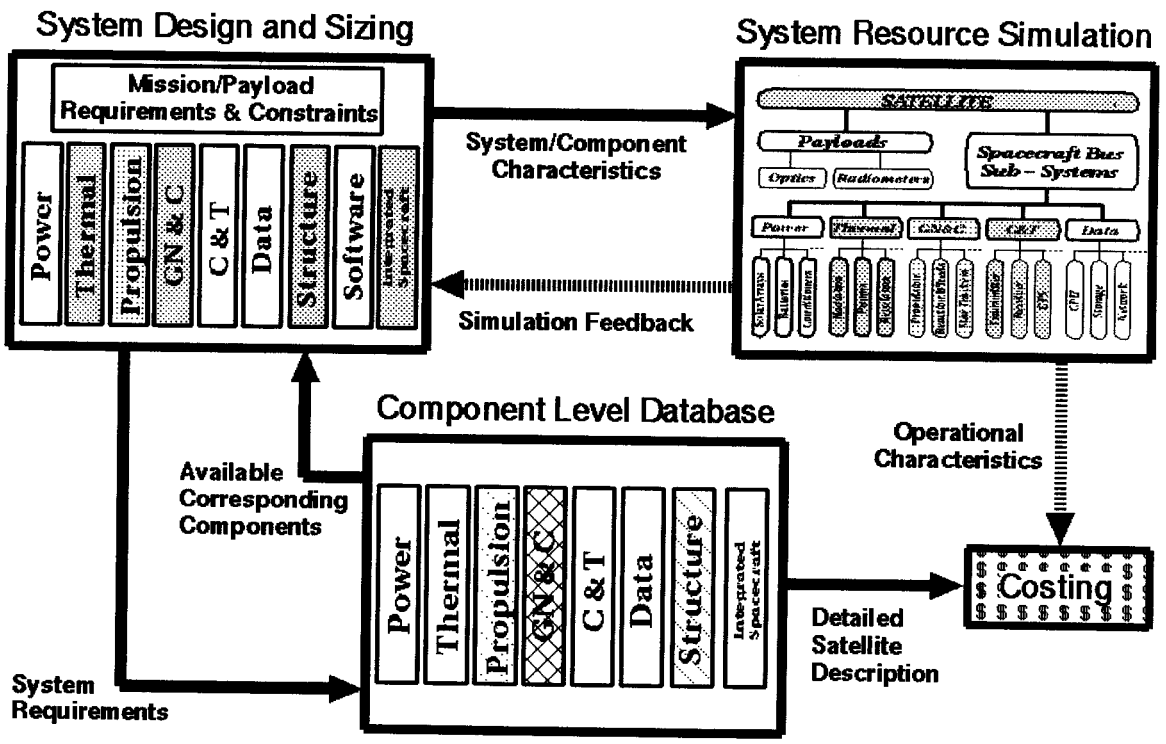

Figure 1. SSDSE General Structure

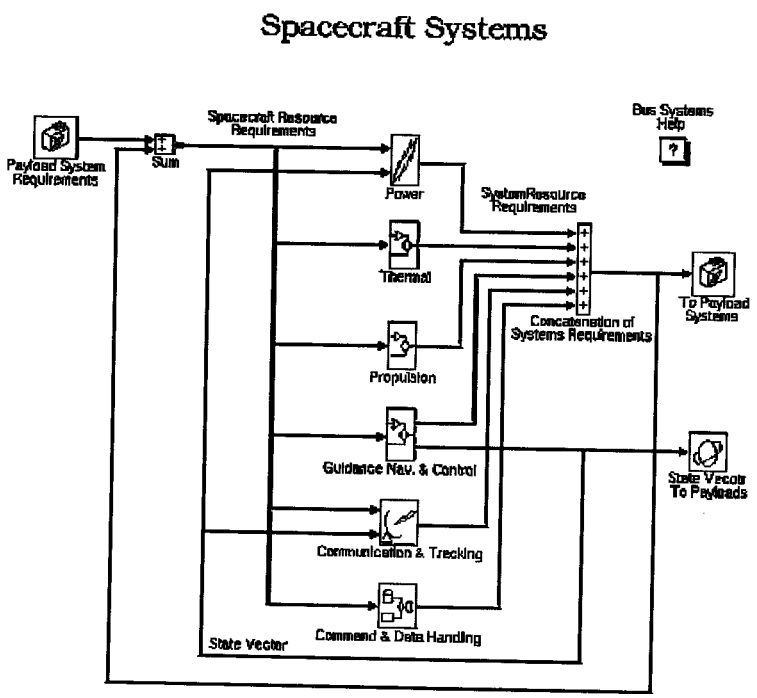

Figure 2. SPASIM Spacecraft Block Diagram

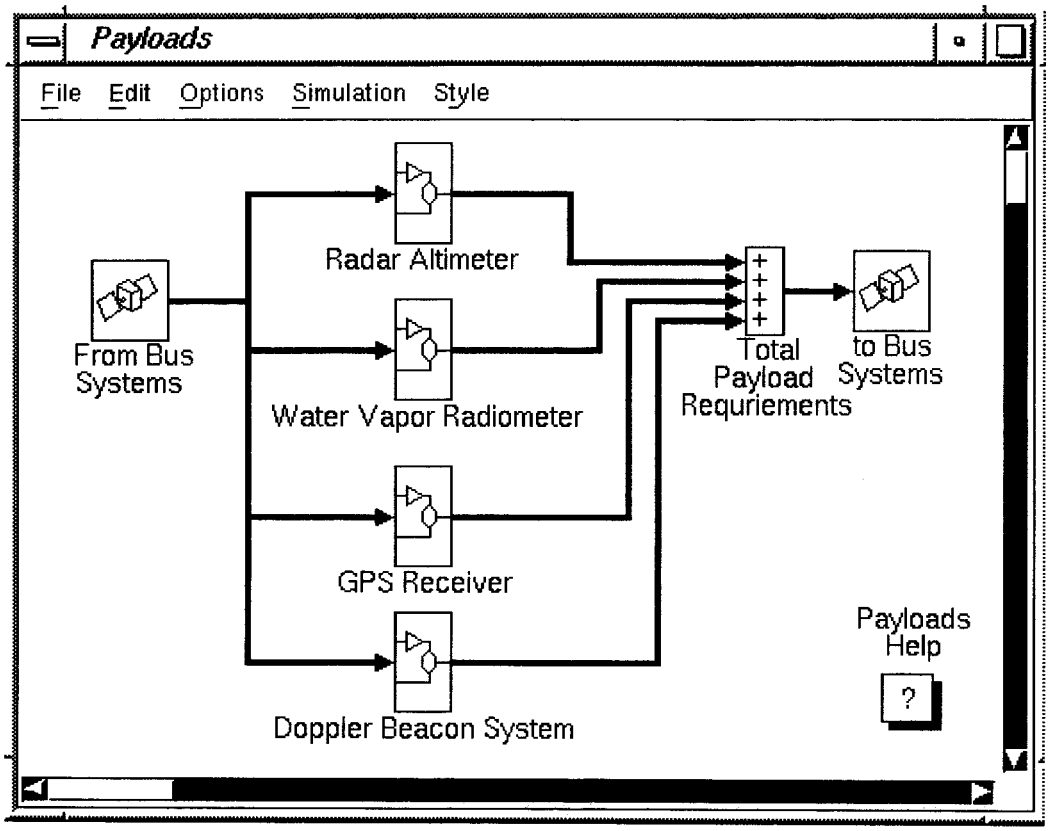

Figure 3. Payload Subsystem Default Block Diagram

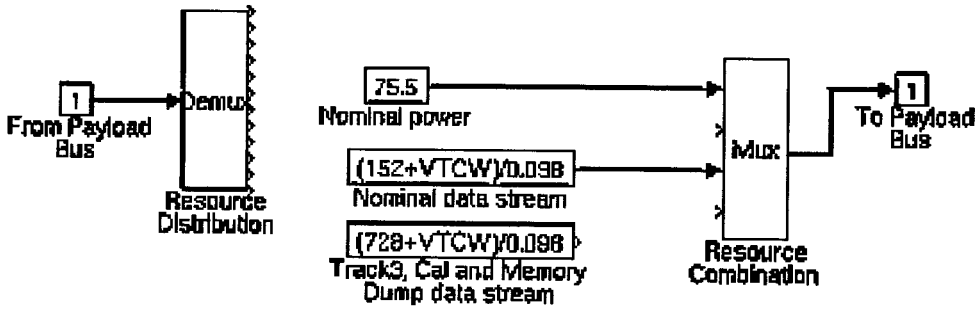

Figure 4. Payload Resource Usage Diagram

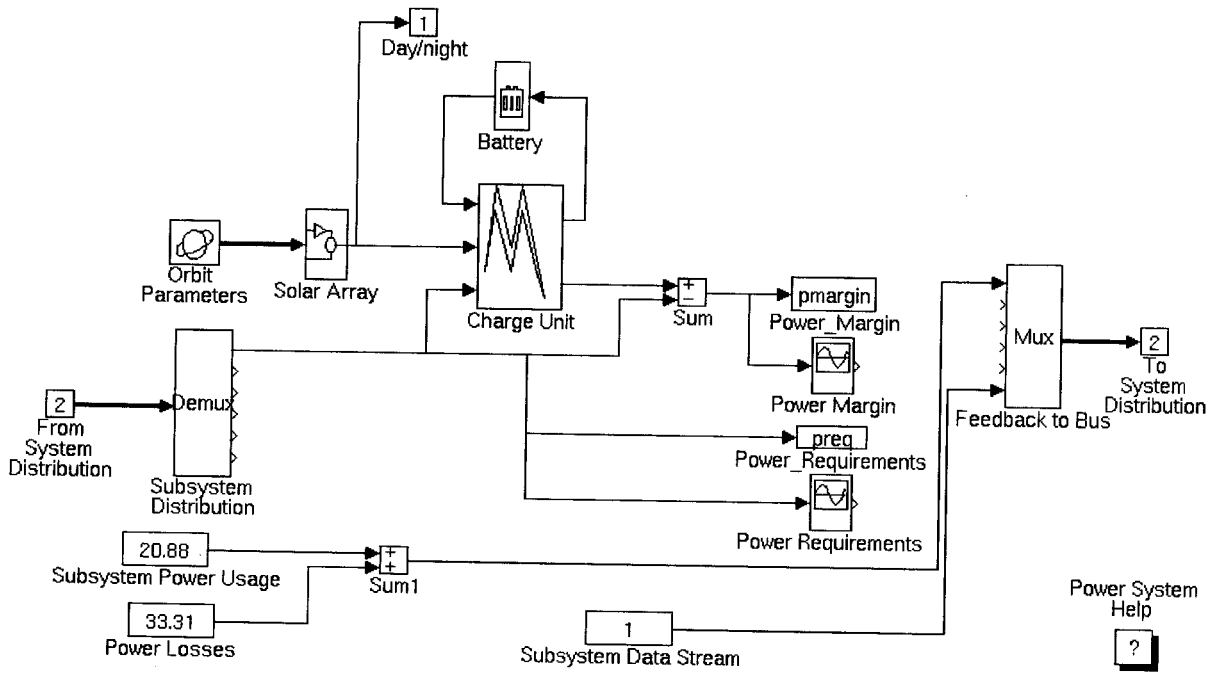

Figure 5. SPASIM Power Subsystem Block Diagram

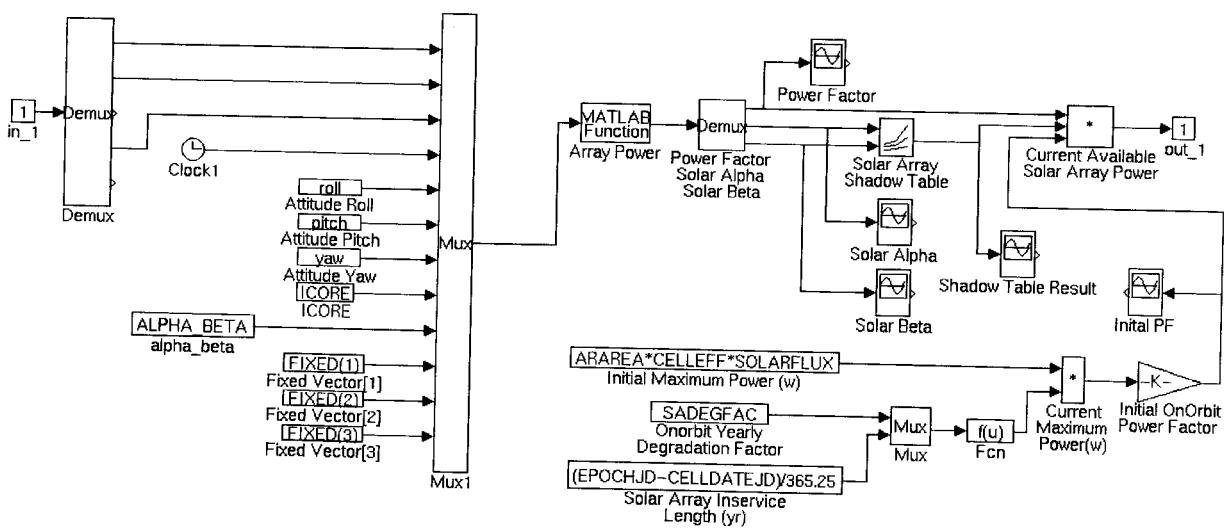

Figure 6. SPASIM Default Solar Array Model