NASA Contractor Report 4730

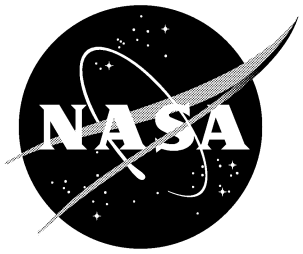

Global Cost and Weight Evaluation of Fuselage Side Panel Design Concepts

D. R. Polland, S. R. Finn, K. H. Griess, J. L. Hafenrichter, C. T. Hanson, L. B. Ilcewicz, S. L. Metschan, D. B. Scholz, and P. J. Smith

Contracts NAS1-18889 and NAS1-20013
Prepared for Langley Research Center

April 1997

NASA Contractor Report 4730

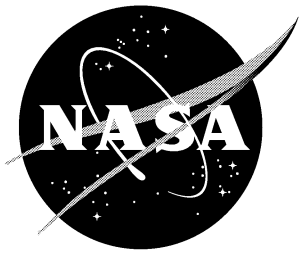

Global Cost and Weight Evaluation of Fuselage Side Panel Design Concepts

D. R. Polland, S. R. Finn, K. H. Griess, J. L. Hafenrichter, C. T. Hanson, L. B. Ilcewicz, S. L. Metschan, D. B. Scholz, and P. J. Smith
The Boeing Company • Seattle, Washington

National Aeronautics and Space Administration
Langley Research Center • Hampton, Virginia 23681-0001

Prepared for Langley Research Center
under Contracts NAS1-18889 and NAS1-20013

April 1997

Printed copies available from the following:

NASA Center for AeroSpace Information
800 Elkridge Landing Road
Linthicum Heights, MD 21090-2934
(301) 621-0390

FOREWORD

This contractor report was prepared by the Boeing Commercial Airplane Group, Renton Washington under contracts NAS1-18889 and NAS1-20013 (Task 2). It documents the global evaluation of fuselage side panel design concepts performed between September 1992 and February 1994. The contracts funding this effort were NAS1-18889 and NAS1-19349 (Task 3), sponsored by the National Aeronautics and Space Administration, Langley Research Center (NASA-LaRC) as part of the Advanced Composite Technology (ACT) program. William T. Freeman, John G. Davis, Mark J. Shuart, and James Starnes were the NASA-LaRC ACT Boeing Contract Monitors.

Use of commercial products or names of manufacturers in this report does not constitute official endorsement of such products or manufacturers, either expressly or implied, by The Boeing Company or the National Aeronautics and Space Administration.

The Boeing program team was led by Jordan T. Olson (Program Manager) and Peter J. Smith (Technical Manager). Authors listed for this contractor report prepared portions of the document. The members of the Boeing ACT contract team who contributed to the work described herein are listed on the following page.

BOEING TEAM MEMBERS

Program Management:
Ray Horton
Jordan Olson

Technical Management:
Peter Smith

Principal Investigator:
Larry Ilcewicz

Business Management:
Marge Apeles

Materiel:
Maureen Hughes[1]
Mark Jones[1]
Doug Wood[1]

Structural Design:
Chris Hanson
Ken Griess
Stephen Metschan
Mike Morris

Technical Support:
Bill Waltari
Tuan Le

Structural Analysis:
Tom Walker
Ernie Dost
Gary Swanson
Blake Flynn
Gerry Mabson
Dave Carbery
David Polland
Scott Finn
Doug Graesser
Adam Sawicki[1]

Materials and Processes:
David Scholz
Karl Nelson[1]
Mark Fedro[1]

Operations Technology:
Kurtis Willden
Tim Davies
Mark Gessel
Joe Hafenrichter[1]
Bob Matetich

Cost Estimating:
Kent Ventors
David Tervo
Len Witonsky
Robert Humphrey
Mike Proctor
Hans Fredrikson

Developmental Engineering:
Jose Valdez
Ponci Puzon
Bonnie Luck
Robert Hawkins

QC and NDE Development:
Ken Mackey

Weight Engineering:
Glenn Parkan

INDUSTRY TEAM MEMBERS

Lockheed Aeronautical Systems[2]:
Lowell Adams
Ron Barrie
Bob Chu
Tony Jackson
Lisa Ott
Bharat Shah
Jay Shukla
Dan Skolnik

Northrop Grumman Corp.:
Ravi Deo
Chris Hussman
Bob Ley
Ram Ramkumar
Steve Russell
Ram Vastava

Sikorsky Aircraft:
Christos Kassapouglou

[1] Boeing Defense & Space Group.
[2] Lockheed activities described herein were funded under Contract NAS1-18888.

TABLE OF CONTENTS

1.0 SUMMARY **1-1**

2.0 INTRODUCTION **2-1**

3.0 TRADE STUDY GROUND RULES **3-1**

3.1 SIDE PANEL DEFINITION 3-1

3.2 LOADS 3-2

3.3 MANUFACTURING CONSIDERATIONS 3-4

3.4 MATERIAL CONSIDERATIONS 3-5

3.5 STRUCTURAL CRITERIA 3-7

3.6 COST ESTIMATING GROUNRULES 3-9

4.0 DESIGN STUDIES **4-1**

4.1 FAMILY B DESIGN 4-1

4.1.1 Family B - Design Description 4-1

4.1.2 Family B - Manufacturing Approach 4-3

4.1.3 Family B - Critical Issues Identified 4-13

4.2 FAMILY D DESIGN 4-14

4.2.1 Family D - Design Description 4-14

4.2.2 Family D - Manufacturing Approach 4-16

4.2.3 Family D - Critical Issues Identified 4-23

4.3 BASELINE ALUMINUM DESIGN 4-24

4.4 TRADE STUDY RESULTS 4-24

5.0 DESIGN COMPARISONS **5-1**

5.1 GLOBAL OPTIMIZATION 5-1

5.2 LOCAL OPTIMIZATION POTENTIAL 5-3

5.3 DESIGN TRADES ASSESSMENT 5-5

5.4 CONCEPT SELECTION RATIONALE 5-9

5.5 RISK REDUCTION 5-17

6.0 CONCLUSIONS **6-1**

7.0 REFERENCES **7-1**

TABLE OF CONTENTS

APPENDIX A: DESIGN FAMILIES **A-1**

APPENDIX B: FAMILY B DESIGN DRAWINGS **B-1**

APPENDIX C: COST AND WEIGHT DATA **C-1**

APPENDIX D: FAMILY D DESIGN DRAWINGS **D-1**

1.0 SUMMARY

This report documents preliminary design trades conducted for a subsonic wide body commercial aircraft fuselage side panel section utilizing composite materials. This work was performed during the time period from September 1992 to February 1994 under NASA contracts NAS1-18889 (Advanced Technology Composite Aircraft Structures, ATCAS) and NAS1-19349 (Task 3, Pathfinder Shell Design).

Included in this effort were (a) development of two complete design concepts, (b) generation of thorough cost and weight estimates for both designs, (c) identification of technical issues and potential design enhancements, and (d) selection of a single design to be further developed during subsequent structural and manufacturing process optimization. The first design concept featured an open-section stringer stiffened skin configuration while the second was based on honeycomb core sandwich construction. To provide a reference for the composite designs, a comparable metallic fuselage structure was also developed.

The trade study cost and weight results were generated from comprehensive assessment of each structural component comprising the fuselage side panel section from detail fabrication through airplane final assembly. ACT program groundrules were followed to assure consistency with past work performed. Results were obtained in three phases: (1) for the baseline designs, (2) after global optimization of the designs, and (3) the results anticipated after detailed design optimization. The estimated cost and weight for each concept considered after this final step are provided in Table 1-1 relative to the metallic baseline.

	Cost ($M, per 300 shipsets)	Weight (lbs, per shipset)
Composite Skin-Stringer	0.77	0.77
Composite Sandwich	0.59	0.71
Metallic Baseline	1.00	1.00

Table 1-1. Side Panel Global Cost and Weight Evaluation Results

In addition to the various cost and weight estimates, a critical assessment of both designs was performed to determine the risk associated with each concept, that is the relative probability of achieving the cost and weight projections. Based upon this assessment, the sandwich design was selected as having the greatest potential to meet the ACT program goals of greater than 20 percent cost savings and more than 30 percent weight savings relative to comparable metallic aircraft structure. Finally, as the first step towards side panel detailed design optimization, seven critical technical issues were identified as listed in Table 1-2. Successful resolution of these issues will be the prime focus of the remainder of Boeing's ACT Phase B program, scheduled for completion in September 1995.

- Keel & Side Panel Detailed Design Development
- Keel Manufacturing & Structural Scaleup
- Side Manufacturing & Structural Scaleup
- Sandwich Panel Repair
- Liquid Ingression Analysis & Test Evaluation
- Cost-Effective, Light-Weight Sandwich Closeouts
- Sandwich Damage Tolerance & Bonded Frame Integrity

Table 1-2. Critical Technical Issues to be Resolved for Successful Demonstration of Composite Honeycomb Sandwich Fuselage Side Panel Structure

2.0 INTRODUCTION

Boeing's Advanced Technology Composite Aircraft Structure (ATCAS) program, initiated in May 1989 under NASA contract NAS1-18889, is an integral part of the NASA Advanced Composite Technology (ACT) program. Reducing the cost and weight of conventional metallic commercial aircraft primary structures by more than 20 percent and 30 percent, respectively, is the goal of the ACT program. (These reduction goals are for a resized aircraft which may achieve as much as 10 percent weight reduction due to synergism of the individual structural components.) Innovative structural concepts utilizing advanced composite materials are being pursued to realize these efficiencies. The specific objective of the ATCAS program is to develop and demonstrate the integrated technology base required to make cost- and weight-effective use of advanced composite materials in pressurized fuselage primary structure.

The ATCAS team has adopted a three-step process to meet the program objective. This approach, applied in an environment integrating all pertinent functional disciplines, is depicted schematically in Figure 2-1 and is fully described in Reference 1. The first step consists of selection of a baseline "design family" for each area of the fuselage: crown, keel, and side panel regions. (As illustrated in Appendix A, a family of design concepts share common geometric configuration, structural performance, and manufacturing process characteristics.) The baseline concepts are those judged a priori to have the greatest potential for cost and weight savings, combined with acceptable development risk.

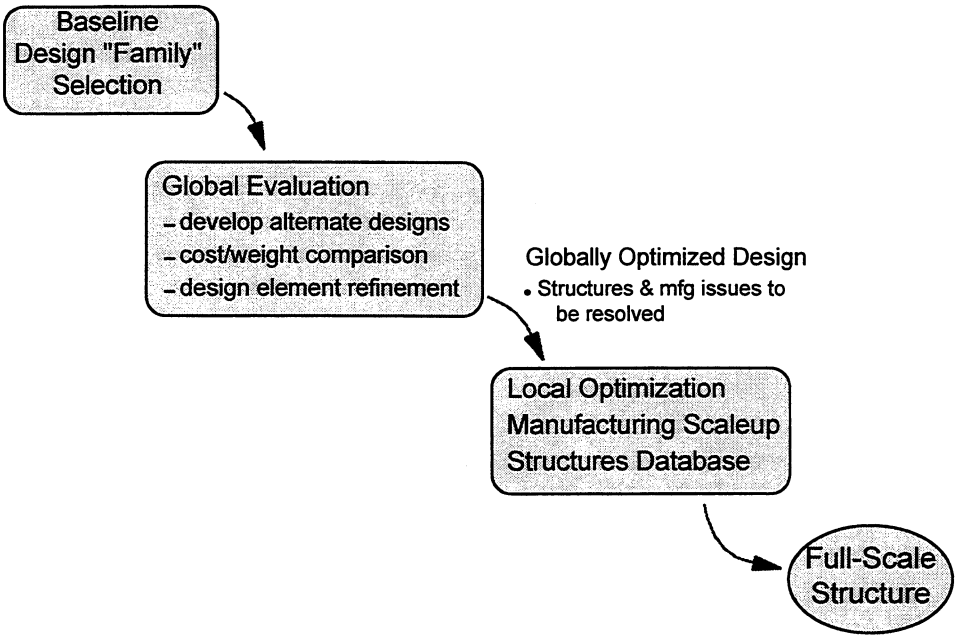

Figure 2-1. ATCAS Approach to Integrated Composite Fuselage Technology Database Development & Demonstration

During the second step, referred to as "global evaluation", preliminary designs are developed in sufficient detail to quantify significant cost and weight discriminators between the baseline

concepts and other potentially low-cost/low-weight concepts. Thorough cost and weight analyses are performed for each concept. New concepts are then generated within each design family by trading design variables in different combinations, leading to identification of an optimum design for each family and an understanding of the design details most significantly influencing its cost and weight. This step culminates with selection of a globally optimized design based on the cost and weight results, as well as an assessment of the risks associated with each concept.

The third step, termed "local optimization", takes the most attractive design identified in the second step and optimizes individual design elements (e.g., skin, core, frames, etc.) within the context of the design's total cost/weight efficiency. Significant attention is directed towards manufacturing scaleup and demonstration in addition to design refinement and structural evaluation.

This report documents global evaluation of the side panel region of a wide body commercial fuselage structure. (References 1 and 2 describe similar studies of the crown and keel regions conducted under the ATCAS program.) Structural concepts considered for the side panel included a skin/stringer design and a honeycomb core sandwich design. Manufacturing preplans were developed in conjunction with the design concepts as fabrication and assembly process assumptions have been shown to significantly influence cost results (Ref. 1). Major cost centers were evaluated to identify the "best" design details thereby improving the efficiency of each concept. Cost and weight results of these modified concepts were compared to a state-of-the-art metallic side panel structure. In addition, a risk assessment of each concept was performed which considered the value of potential weight savings. Finally, these results provided focus for the side panel local optimization activity which began immediately following completion of the side panel global evaluation.

3.0 TRADE STUDY GROUND RULES

3.1 Side Panel Definition

The subject of this global evaluation design study is the side panel of a wide body commercial transport fuselage. As depicted in Figure 3-1, the area of focus for this study was the fuselage barrel section located just aft of the main landing gear wheel well. This region of the fuselage, referred to as Section 46 on Boeing aircraft, has a constant diameter of 244 inches throughout the 398 inch length. The design parameters (i.e., geometric envelope, loads, and configuration constraints) are characteristic of an aircraft approximately 80 percent the size of a Boeing 747.

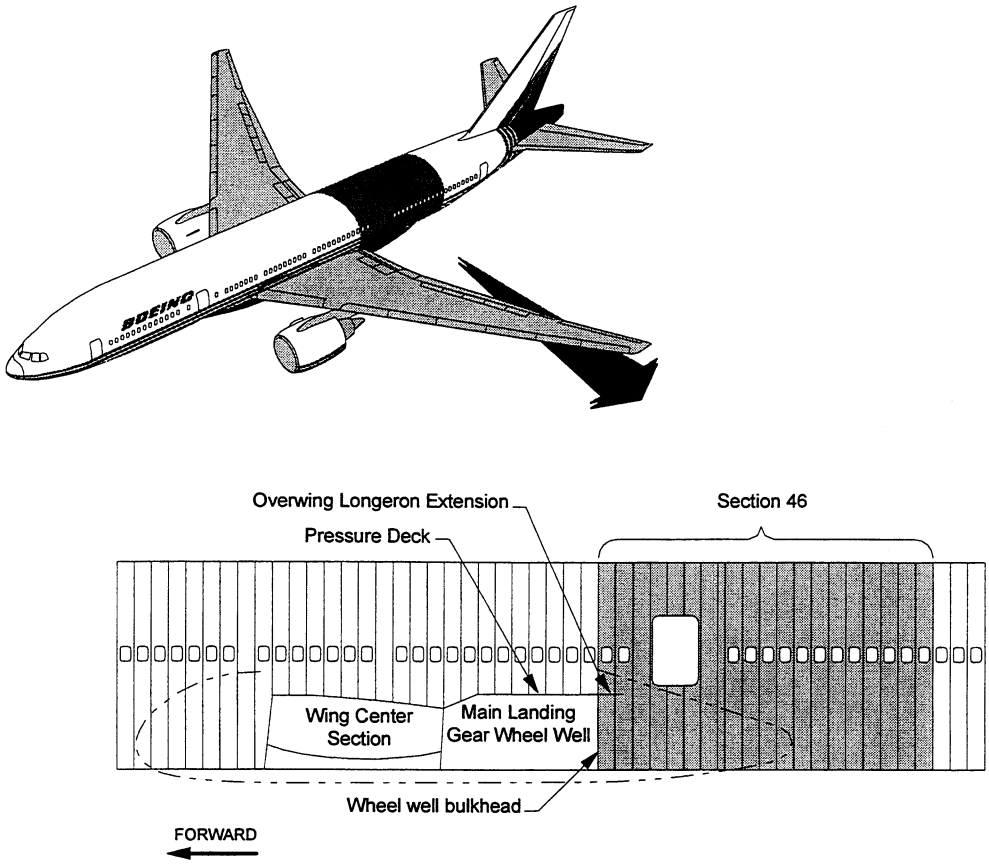

Figure 3-1. Location of Fuselage Section Considered in Trade Study

The ATCAS program baseline fuselage configuration is divided into four panels as illustrated in Figure 3-2. This definition resulted from balancing the manufacturing risk of building large cocured/cobonded assemblies with the cost efficiencies associated with larger panel sizes and reduced number of splices as compared to conventional metallic fuselage structure. Trade studies similar to that described herein have been performed on the crown and keel panels (Ref. 1, 2). Design features unique to the side panel are passenger doors, windows, a large cargo door,

and passenger floor structure. With the exception of the cargo door located on the right side panel, the two side panels share a common structural configuration. The ATCAS design development focused on the left side panel; however, issues associated with the cargo door were addressed through design of the passenger door structure. The design studies described herein encompass the side panel structural details (stiffened skin, circumferential frames, splices, cutout reinforcements, and passenger floor structure) only. Systems and interiors are assumed to be unchanged from those found on current transport aircraft.

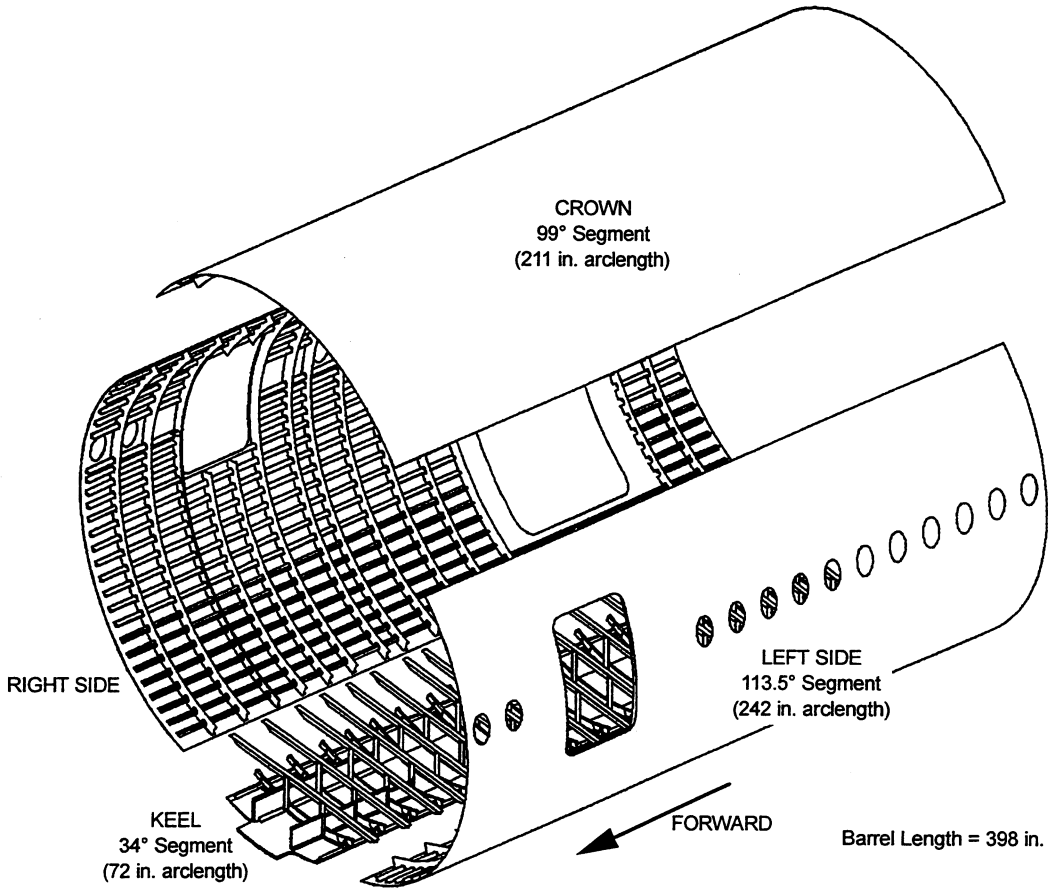

Figure 3-2. Exploded View of ATCAS Baseline Fuselage Panel Definition

3.2 Loads

Critical loads result from several flight and ground maneuvers. In general, maximum shear loads result from overall fuselage bending induced by pitch maneuvers while maximum axial tension and compression loads are induced by yaw maneuvers such as rudder, engine-out, or ground turn conditions. Furthermore, the aircraft configuration subjects the side panel to locally intensified load levels in several areas. As can be seen from the envelope contour plot of maximum axial load resulting from all flight conditions (Figure 3-3), the wheel well creates a load shadow in the lower forward area, with load intensity increasing as load is sheared in from the keel. Also, the

passenger door cutout and overwing longeron extension cause severe local load concentrations. Similar trends are observed for the maximum shear loads (Figure 3-4).

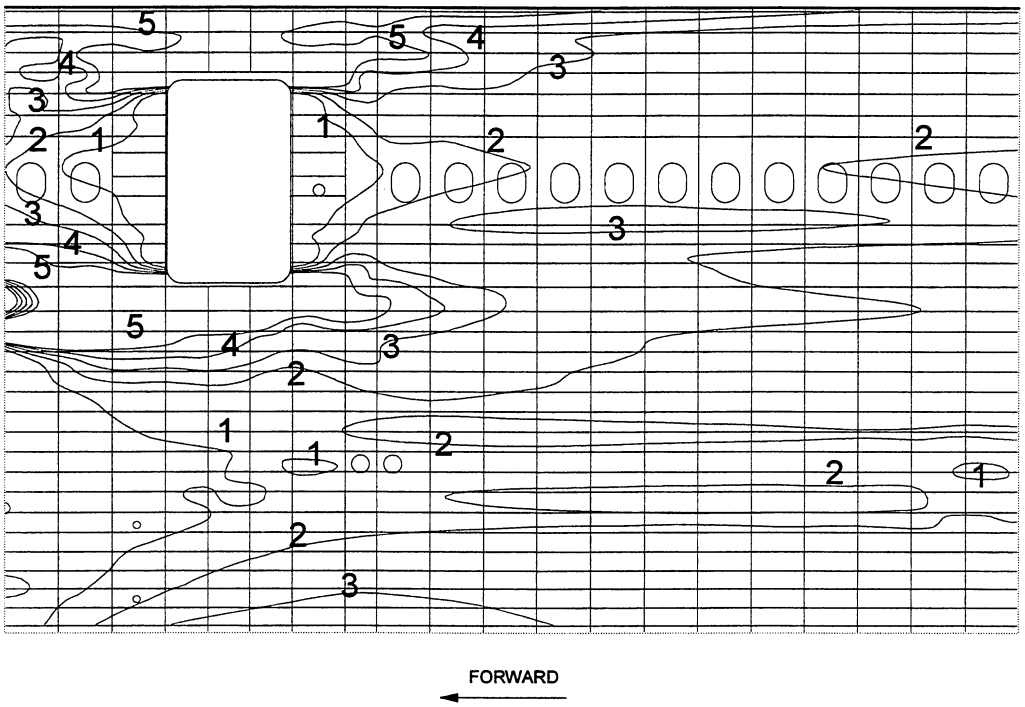

Figure 3-3. Side Panel Maximum Envelope Ultimate Axial Loads (kip/in)

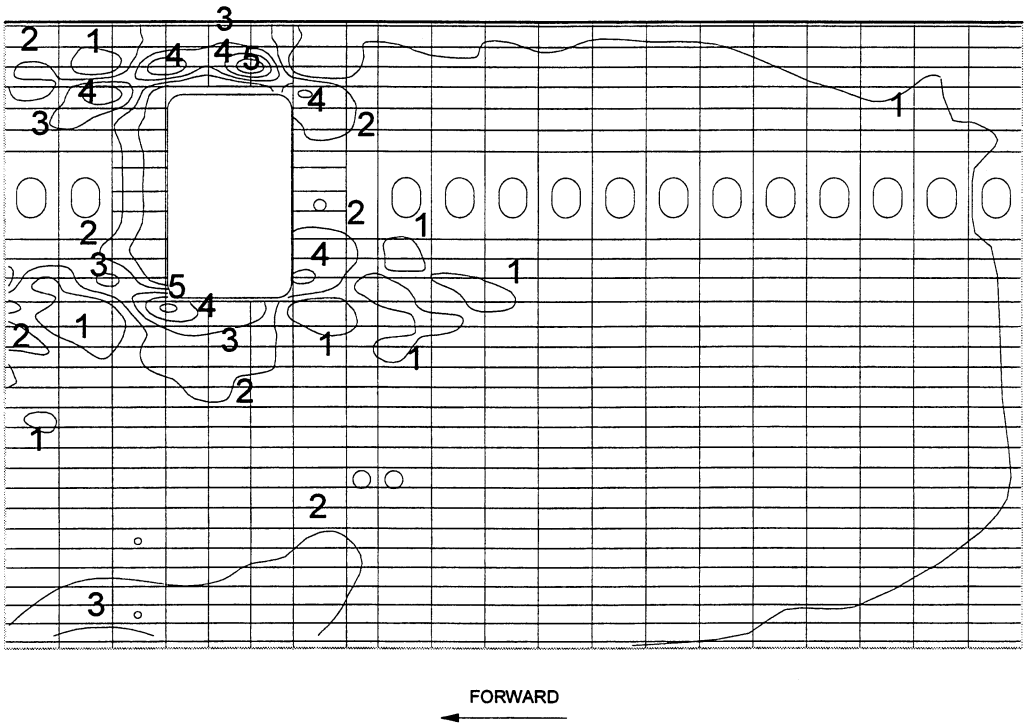

Figure 3-4. Side Panel Maximum Envelope Ultimate Shear Loads (kip/in)

Three ultimate load cases were used to size the semi-monocoque structure for strength and stability. The first includes flight loads combined with cabin pressure (9.1 psi, representing the maximum positive pressure differential), both factored by 1.5. The second consists of flight loads (multiplied by a factor of 1.5) acting alone. The third considers cabin pressure (18.2 psi, representing twice the maximum positive pressure differential) acting alone.

Several load cases were considered in sizing the circumferential frames, including ultimate pressure (18.2 psi), flight and ground loads, and crash loads. In addition, each of the flight load cases was evaluated in concert with cabin pressure. Similar conditions were used to design the passenger floor structure.

The side panel designs were also checked for two residual strength requirements under severe damage scenarios. The first requires limit axial load carrying capability in a panel with a transverse through-penetration severing one stringer and a length of skin up to twice the stringer spacing (or the equivalent thereof for sandwich configurations). The second condition consists of a 10.35 psi (1.15 times the normal operating pressure differential plus external aerodynamic pressure) pressure load acting on a panel with a through-penetration (oriented perpendicular to the hoop loading direction) severing a frame and up to two skin bays.

3.3 Manufacturing Considerations

Fabrication processes assumed for the side panel global evaluation study were characterized by a high degree of automation and integration of structural elements into cocured/cobonded assemblies. These trends were based on the results of the ATCAS crown and keel global evaluation studies which identified manual processes and high part count as significant cost drivers. Furthermore, it was assumed that a factory would be capitalized specifically for the selected manufacturing processes. This produced additional efficiencies due to optimum layout and utilization of automated equipment; these efficiencies were reflected in the cost estimating approach. The fuselage panel sizes (identified in Figure 3-2) were defined to maximize automated fabrication process efficiencies while minimizing the amount of assembly required. The individual panel configurations were also selected for optimum manufacturing efficiency and payoff. In the crown, for instance, a hat-stiffened skin design was selected. However, instead of attaching the stringer to the skin at the center of the middle segment of the hat as is common in hat-stiffened metallic structure, the cross-section was inverted and the two outer flanges used for skin attachment. This approach was much easier to tool and to achieve the required tolerances in the cured part. Similarly, the side panel sandwich design assumed that the honeycomb core could be machined to account for all facesheet thickness variations so that the inner skin surface had a constant radius. This greatly simplified fabrication and assembly of the circumferential fuselage frames to the skin panel, resulting in large cost savings over a non-tailored core design.

Four basic manufacturing processes were assumed for side panel fabrication. The skin panels, whether skin-stringer or sandwich, utilized automated fiber placement of individual plies directly onto the cure tool. Braided textile preforms consolidated using resin transfer molding (RTM) in matched metal tooling was identified as the most efficient process for large numbers of curved elements such as circumferential fuselage frames and window frames. Hot drape forming was

identified for thin to moderately thick straight parts such as stringers, floor beams, and stanchions. And finally, pultrusion was identified as a highly economical process for fabricating straight, constant cross-section elements required in large quantities such as stringers, floor beams, and intercostals.

3.4 Material Considerations

Material systems considered for the ATCAS side panel global evaluation were chosen based on availability, cost, performance, and compatibility with the selected manufacturing processes. In addition, those material systems considered for fabrication of ATCAS crown and keel panels were selected where possible to make use of previously developed technology and to minimize inventory in the theoretical production environment. The material systems considered in the trade study are summarized in Table 3-1 for the major side panel structural elements. Costs associated with each material were developed based on vendor data for projected production quantities for a wide body composite fuselage in the 1995 to 2005 time frame.

The baseline material for side panel fuselage skins consisted of a standard modulus fiber (Hercules' AS4) in a moderately toughened epoxy matrix (Hercules' 8552). Higher modulus fibers were not expected to be cost or weight efficient based on previous studies of the crown and keel panels (Ref. 1, 2). The toughened resin system was desired due to relatively high compression and shear loads. However, this desire was tempered by tension loads which dominate some regions of the side panel. For compatibility with the fiber placement process, a homogeneous (i.e., not interlayer particulate toughened) system was selected. As previous ATCAS efforts had observed superior large notch tension fracture performance in untoughened systems (Ref. 3), the lower cost Fiberite 938 untoughened resin system selected for crown panel skins was also evaluated in the side panel trade study. A nominal fiber areal weight of 190 g/m^2 provided economical layup of material in thick regions while retaining design flexibility in minimum gage areas.

Intermediate modulus carbon fiber (Hercules' IM6) in a toughened epoxy matrix was desired for stiffening elements, floor beams, and passenger floor stanchions due to high strength and stiffness requirements. Lower cost AS4 fiber was also evaluated for these elements and incorporated where appropriate. Straight elements such as stringers and sills were proposed to be drape formed from 8552 resin prepreg tape and fabric although pultrusion was also considered for elements with constant cross-section. Both pultrusion and drape forming processes were considered for the floor beams and intercostals. Curved elements such as circumferential frames were assumed to be braided and resin transfer molded. 3M's high performance PR-500 and Shell's low cost RSL 1895 resin systems were considered for resin transfer molding with PR-500 selected by Lockheed for fabrication of circumferential frames under their ACT contract (Ref. 4).

Lockheed selected woven AS4/AMD-0036 powder prepreg tow as the baseline material system for window frames (Ref. 5). Braided textile preforms consolidated using resin transfer molding (RTM) was retained as an optional process for these elements. Aluminum window frames typical of current production aircraft were also considered with the requisite isolation from the carbon/epoxy skin for galvanic corrosion protection.

Skins	AS4/938 (35% resin content) 12k tow AS4/938 (38% resin content) fabric AS4/8552 (35% resin content) 12k tow AS4/8552 (38% resin content) fabric
Stringers & Stanchions	IM6/8552 (35% resin content) 12k tape IM6/8552 (38% resin content) fabric
Core	8 pcf glass/phenolic HRP, 3/16" cell size
Core Closeouts	Injection molded epoxy filled w/ chopped graphite fibers AS4/RSL1895 triaxial braid T300/934 fabric
Fuselage Frames	AS4/RSL1895 triaxial braid AS4/PR-500 triaxial braid
Edge Frames	IM6/RSL1895 triaxial braid
Aux. Frames	AS4/RSL1895 triaxial braid IM6/RSL1895 triaxial braid
Sills	AS4/8552 (38% resin content) fabric
Intercostals	AS4/Epoxy (pultrusion compatible) IM6/8552 tape & fabric
Window Frames	AS4/AMD-0036 towpreg AS4/PR-500 triaxial braid 7075-T73 Aluminum
Floor Beams	IM6/Epoxy (pultrusion compatible) IM6/8552 (35% resin content) 12k tape IM6/8552 (38% resin content) fabric
Fasteners	Titanium Eddie bolts & Hilocks
Miscellaneous Fittings	6Al-4V Titanium

Table 3-1. Materials Considered in Side Panel Global Evaluation

Hexcel's HRP (0°/90° fiberglass-reinforced phenolic) honeycomb was chosen as the baseline core material for sandwich design concepts. The selection was based on keel panel cost/weight trade studies and impact damage resistance testing (Ref. 6). DuPont's Korex (aramid fiber reinforced phenolic) honeycomb which offers significant potential weight savings (at a cost penalty) was included in the design optimization trades discussed in Section 5.1.

Several materials and processes were considered for fabrication of sandwich core closeouts. Longitudinal panel splice closeouts were assumed to be braided and resin transfer molded tubular elements utilizing AS4 fiber and the RTM resin systems described above. Injection molding was chosen for circumferential splice and window closeouts. A chopped carbon fiber-filled epoxy was assumed to provide adequate stiffness to maintain fastener clampup for these applications. AS4/938 prepreg tape was selected for passenger door core closeouts due to their thin gage and large surface area.

Other materials included in the trade study included Narmco's Metalbond 1515-3M epoxy film adhesive (0.05 psf) for all bonded joints, selected due to Boeing's extensive experience with this

system for bonding 350°F cure composite structure. Due to complex attachment requirements in several locations, both titanium (6Al-4V) and aluminum (7075) were considered for various fittings. Use of the more expensive titanium avoided galvanic corrosion protection schemes required for aluminum.

3.5 Structural Criteria

The side panel design guidelines are related to structural requirements for ultimate strength, residual strength, stability, and warpage. While the side panel criteria were generally consistent with that used for the crown and keel global evaluation studies, advantage was taken of recent data generated under the ATCAS program on the materials of interest. Table 3-2 summarizes these guidelines.

Ultimate Strength	basic: 0.0042 in/in ≤ e^{tu} ≤ 0.0062 in/in (material and laminate dependent) 0.0031 in/in ≤ e^{cu} ≤ 0.0036 in/in (material and laminate dependent) near stress concentrations: 0.0054 in/in ≤ e^{tu} ≤ 0.0106 in/in (material and laminate dependent) 0.0046 in/in ≤ e^{cu} ≤ 0.0053 in/in (material and laminate dependent)
Damage Tolerance	one structural unit failed to LIMIT load one cutout reinforcement element failed to LIMIT load axial skin stiffness 40% to 60% of configured panel axial stiffness laminates must contain at least 10% each of 0°, 45°, -45°, and 90° plies no more than four plies of same orientation grouped together
Stability	minimum wide column stability margin of 0.25 minimum stringer crippling margin of 0.25 skin buckling between stringers allowed at: 33% of ULTIMATE for skin thickness less than 0.11" 40% of ULTIMATE for skin thickness between 0.11" and 0.14" 100% of ULTIMATE for skin thickness greater than 0.14" minimum skin/stringer separation margin of 0.25
Joints and Splices	bearing/bypass requirements fastener countersink depth < 2/3 of skin thickness
Panel Warpage	cocured/cobonded element Poisson's ratio mismatch < 0.15 laminates must be balanced; any unsymmetry minimized and kept near laminate midplane

Table 3-2. Side Panel Design Guidelines

The basic cutoff strain values for ultimate tensile and compressive strength, e^{tu} and e^{cu}, represent 0.25-inch diameter filled hole and open hole data at extreme environments, respectively, as a function of the material and laminate modulus, E_{lam}. The cutoff strain value for ultimate shear strength, e^{su}, was assumed to equal twice the tensile cutoff strain. A quadratic interaction criterion was used to account for combined loading. Isotropic stress concentration factors applied to ultimate panel loads were used to determine window and passenger door doubler

requirements. The strain limits for areas of stress concentration, such as at cutouts, are based on ultimate unnotched material capability under extreme environments. Properties for textile elements were assumed similar to those developed under the ATCAS crown frame development effort (Ref. 7).

Sizing for damage tolerance requirements was based on data generated for several material systems over a range of damage scenarios and structural configurations (Ref. 3, 8, 9) as part of the ATCAS crown study. This data was used to develop an empirical expression for residual strength of configured structure as a function of material, laminate stiffness, and damage size. This expression is

$$\varepsilon_{all} = C_1 + C_2(2a) + C_3(E_{lam}) + C_4(2a)(E_{lam})$$

where ε_{all} is the allowable strain, C_1 through C_4 are empirically-determined material constants, 2a is the notch length, and E_{lam} is the laminate modulus (in Msi) perpendicular to the crack. This allowable strain is compared to the strain in the undamaged structure multiplied by a correction factor (Y) to account for load redistribution effects. For longitudinal notches (i.e., along the length of the cylinder), Y was assumed to equal one. For circumferential notches, Y was assumed to be 1.1 for skin-stringer designs as predicted in References 10 and 11 for sandwich designs.

Skin stability analyses utilized a curved orthotropic plate solution (Ref. 12) for compressive loading; for shear loading, an approximate flat plate orthotropic solution was employed with correction factors to account for curvature. An elliptic interaction equation accounted for effects of combined shear-compression loading (Ref. 13). No buckling of sandwich skins was allowed below design ultimate load, while post-buckled skins were allowed for the skin-stringer designs as indicated in Table 3-2.

For skin-stringer designs, an effective width approach was used to determine the strains in the skin and stringers at loads above the skin buckling load. The approach was developed for implementation in the COSTADE computer program (Ref. 14) and is similar to that outlined in Reference 13 for isotropic materials. The effective width, w, is related to the applied compression load on a single skin bay and stringer through the equation

$$Aw^2 + Bw + C = 0$$

where

$$A = \frac{PE_{sk}t_{sk}}{2p^2}$$

$$B = -E_{sk}t_{sk}\left[(D_{11} + D_{22})^{1/2} + D_{12} + 2D_{66}\right]_{sk}$$

$$C = -(AE)_{st}\left[(D_{11} + D_{22})^{1/2} + D_{12} + 2D_{66}\right]_{sk}$$

In these equations, E is the laminate axial modulus, t is the laminate thickness, A is the cross-sectional area, the D_{ij} are the laminate bending stiffnesses from classical laminated plate theory, and the subscripts sk and st represent the skin and stringer, respectively.

Euler column stability of the stringer and effective skin was assessed at design ultimate load including the effects of shear deformation of the column (Ref. 15). Stringer crippling was conservatively assumed to occur when the stringer buckled locally. Local stringer buckling was predicted based on flat orthotropic plate solutions (Ref. 16) with simply-supported boundary conditions assumed at each intersection between stringer subelements (e.g. between web and flange) and at each frame location. Skin-stringer separation was predicted using an empirical expression proposed by Northrop (Ref. 17, 19) which provided reasonable correlation with test data from the ATCAS crown database.

The joints and splices were sized according to bearing/bypass design values and minimum thickness requirements for countersunk fasteners. The load distribution in a joint with multiple rows of fasteners was determined based on elastic analyses. The resultant bearing loads and bypass strains were calculated for each fastener and compared to allowable curves given as a function of material and layup. These curves specify an allowable bypass strain for a given bearing load and were generated from available material properties and bolted joint data developed for the ATCAS crown design. For countersunk fasteners, the minimum skin thickness was taken to be 1.5 times the countersink depth to account for the effect of stress concentrations near the countersink and to ensure reasonable resistance to fastener pull-through.

The circumferential fuselage frames were sized with an assumed effective skin width of 21 inches (the nominal frame spacing) for loads not causing skin buckling (pressure acting alone and pressure combined with tensile flight loads). For flight loads producing skin buckling, a 5-inch effective skin width was assumed.

3.6 Cost Estimating Groundrules

Cost estimates generated in support of the side panel global evaluation utilized ground rules (Table 3-3) consistent with previous estimates completed for the ATCAS crown and keel panels. These ground rules are based on the recommendations of participants at NASA Advanced Composite Technology (ACT) cost workshops.

- 300 shipsets with a peak rate of 5 shipsets/month
- All new tooling is considered
- Recurring labor wrap rate of $100/hour
- Nonrecurring labor wrap rate of $75/hour
- Part configuration per ATCAS engineering drawings
- Part tolerances per engineering drawing or applicable material and process specifications
- Cost estimates based on ATCAS manufacturing plans
- Raw material costs based on ATCAS-supplied factors and vendor estimates
- Estimated material cost is unburdened
- Variance factor and improvement curves based on historical data
- Does not include RDT&E or capital costs
- Splice costs apportioned over the specific panels joined

Table 3-3. Side Panel Cost Estimating Groundrules

The approach taken for the side panel estimates deviated to a certain degree from that followed in global evaluation of the keel and crown panels. A combination of detailed and parametric estimating methods were employed and for the first time on the ATCAS program, organizations external to Boeing contributed estimates for side panel elements. (Previous ATCAS trade studies relied on detailed Boeing estimates exclusively.) This approach reduced the time required to complete the estimates and did not compromise the validity of the results as the parametric estimates were correlated to previous detailed estimates of similar processes. Figure 3-5 describes the estimating methods and performing organizations for the various side panel elements.

		Non-Recurring	Recurring					
			Mat'l	Labor				
		Boeing Detailed	Boeing Detailed	Boeing Parametric	Boeing Detailed	Sikorsky Detailed	Lockheed Detailed	Northrop Detailed
SANDWICH	PANEL BOND ASSY.	●	●	●	●*	●		
	CIRC. FRAME FAB.	●	●	●		●	●	
	WINDOW BELT FAB.	●	●	●				
	DOOR REINFORCE. FAB	●	●	●				●
	PANEL ASSY.	●	●	●				
	Window Installation				●			●
	Door Installation				●			●
	INSTALLATION	●	●	●				
SKIN-STRINGER	PANEL BOND ASSY.	●	●	●		●		
	CIRC. FRAME FAB.	●	●	●			●	
	WINDOW BELT FAB	●	●		●		●	
	DOOR REINFORCE. FAB	●	●	●				●
	PANEL ASSY.	●	●	●				
	Circ. Frame Installation				●			●
	Door Installation							●
	INSTALLATION	●	●	●				

* Estimate considered fabrication and assembly of the core elements only.

Figure 3-5. Cost Estimating Methods Utilized For Side Panel Global Evaluation

4.0 DESIGN STUDIES

Global evaluation of the side panel was performed over an eighteen month period ending in February 1994. Design concepts were developed for two design families (see Appendix A). Family B consists of a skin/stringer/frame configuration with mechanically fastened circumferential frames, stringer clips, and J-section stringers cobonded to the laminate skin. Family D is a sandwich configuration with cobonded circumferential frames. Both designs included similar passenger door cutout reinforcement, window cutout reinforcement, and passenger floor support structures, as well as splices necessary to assemble the side panel into a complete fuselage structure. Note that the inclusion of a Family B design supersedes the side panel baseline Family C design selected early in the program (Ref. 1); this was a result of insight gained through the ATCAS crown and keel studies as well as a greater understanding of the side panel design drivers.

The following subsections describe each side panel design and corresponding manufacturing plans, design drivers, and cost/weight results. Additional information is provided in Appendices B and D which contain excerpts from the engineering drawings defining the Family B and Family D configurations.

4.1 Family B Design

The Family B side panel assembly is shown in Figure 4-1; representative engineering drawings are contained in Appendix B. The general side panel configuration, including location of passenger doors, window pitch, and structural hard points (e.g., the overwing longeron extension) was established at the airplane level and was not varied for this study. Due to the high shear loading encountered in the side panel, open section stringers were considered (in contrast to the hat-section stringers selected on the ATCAS crown panel) to facilitate a direct structural attachment at each stringer/circumferential frame intersection.

4.1.1 Family B - Design Description

Dominant design drivers for the Family B skin-stringer design are depicted in Figure 4-2. The design was sized to the criteria described in Section 3.5 with the axial damage tolerance calculations assuming a nominal skin penetration length of two stringer bays, which varied from 15.4 to 18.07 inches. Circumferential damage tolerance was checked for a penetration severing a frame plus the two adjacent frame bays of skin for a maximum damage length of 42 inches. Both hoop and axial damage tolerance were found to dominate the design of the side panel lower aft and middle regions (above and below the window belt). Moving down the panel, the axial compression loads peak at the lower longitudinal splice, requiring thicker skins and heavier stringers in the lower region to preclude panel buckling. Post-buckling was permitted (with skin-stringer separation as the limiting structural criteria - see Section 3.5), however, high combined shear plus axial compression loading resulted in thicker skin laminates than would have been required for high axial compression loading alone. The lower forward quadrant of the panel is in a load shadow caused by the main landing gear wheel well located in the fuselage section immediately forward of the study section. Shear buckling sized the structure in this area.

Typical stringer spacing is 7 to 9 inches, with structural stability and panel configuration (i.e., location of passenger door stops, door sills, panel splices, and the overwing longeron extension) being the chief constraints. A minimum gage constraint based on potential hail- and Zone 2 lightening-strike durability requirements was imposed but not found to drive the design. However, minimum gage constraints at countersunk fastener locations (e.g., the circumferential frames) did impact the design.

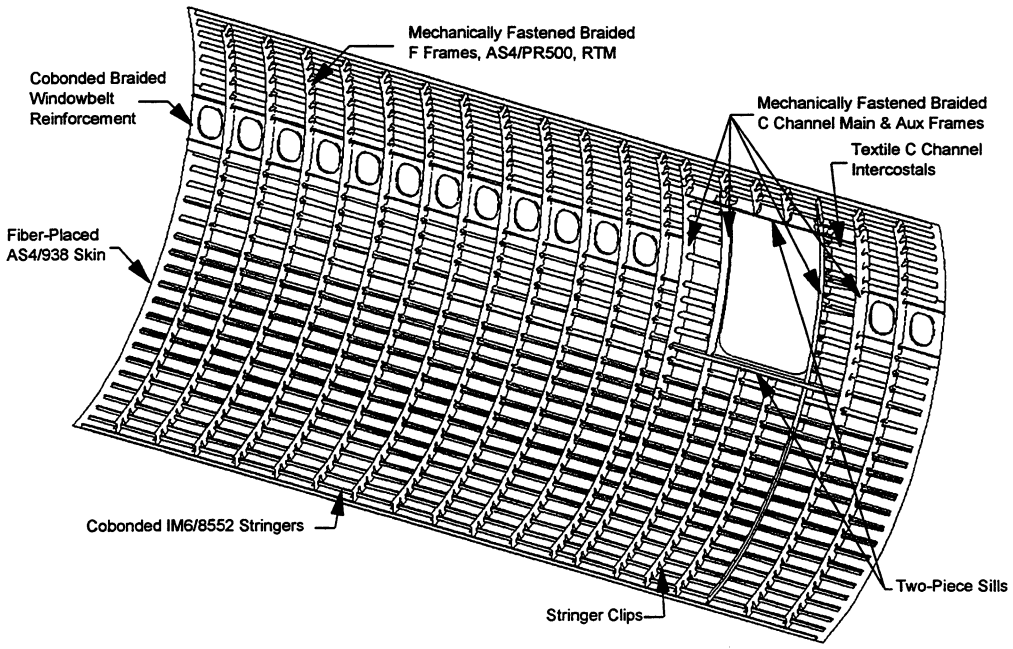

Figure 4-1. Family B (Skin-Stringer) Side Panel Assembly

The regions adjacent to the window cutouts are governed by ultimate strength due to the strain concentrations arising from maximum shear combined with axial and hoop loading conditions. The passenger door cutout skin doubler was also sized for ultimate strength concerns for maximum combined axial, shear, and hoop load conditions. Design of the circumferential fuselage frames was performed by the Lockheed Aeronautical Systems Company under a separate NASA ACT-funded program (contract number NAS1-18888). Frame design drivers included hoop tension due to cabin pressure and bending at passenger and cargo floor attachments. To simplify the design (as well as the fabrication trials), a constant cross-section design common to all locations was developed based on peak loads occurring at the passenger floor attachment a few stations aft of the passenger door. The frames all feature a fail-safe flange, necessitated by the mouseholes cut in the frame outer flange at each stringer location. The mechanically attached door edge and auxiliary frames, and upper and lower sills were designed by ultimate hoop and axial loads, respectively, as well as fail-safe conditions requiring limit load carrying capability with single structural unit failures. The mechanically fastened longitudinal and circumferential splices were sized by either bearing/bypass or minimum thickness required for flush head (countersunk) bolts. Stringers (at the upper and lower longitudinal splices) and frames (at the forward and aft circumferential splices) are included to

assure panel stability at each panel splice location. The area surrounding the overwing longeron extension is likewise sized by bearing/bypass concerns due to highly concentrated axial loads introduced into the side panel at this location.

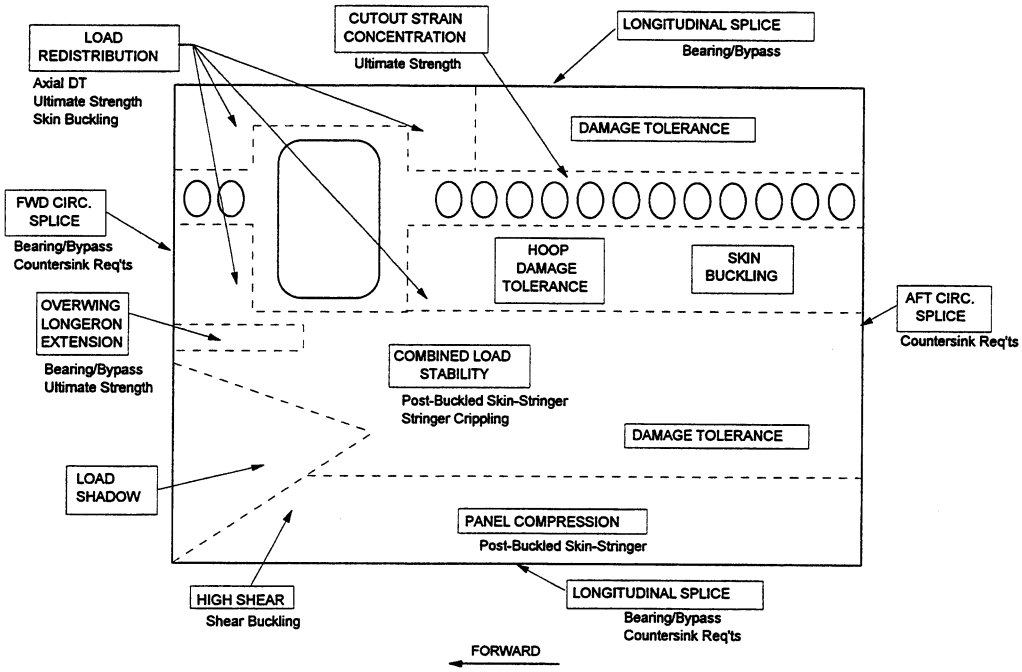

Figure 4-2. Skin/Stringer Critical Design Drivers

4.1.2 Family B - Manufacturing Approach

Manufacturing assumptions made in support of this study are consistent with those used throughout the ATCAS program. Namely, no constraints regarding factory size or capital requirements were considered. In addition, relatively near-term technologies (available within the next five to ten years) were assumed for the major fabrication processes. The following discussion describes the basic manufacturing processes identified for the Family B design, given in the order in which fabrication would occur.

The Family B design skin laminate is made from AS4/938 tow and fabric prepreg materials while the stringers utilize IM6/8552 tape and fabric prepreg materials. The fabric plies are limited to the inner and outer surfaces of the skin and stringer laminates to prevent fiber breakout during panel trimming and drilling of fastener holes. AS4/938 prepreg tow was used in the skin due to its large-notch tension damage tolerance characteristics as demonstrated in the ATCAS crown panel testing (Ref. 3, 8, 9), whereas IM6/8552 stringers provided slightly better value over AS4/938 (in terms of cost/weight efficiency) due to increased stiffness and higher small notch damage tolerance. AS4/8552 prepreg tow also was evaluated as a potential skin material system, but resulted in a heavier design due to its relatively poor large-notch tension damage tolerance as compared to AS4/938. The skin lay-up patterns, thickness, and stringer cross-sectional areas are shown in Figure 4-3.

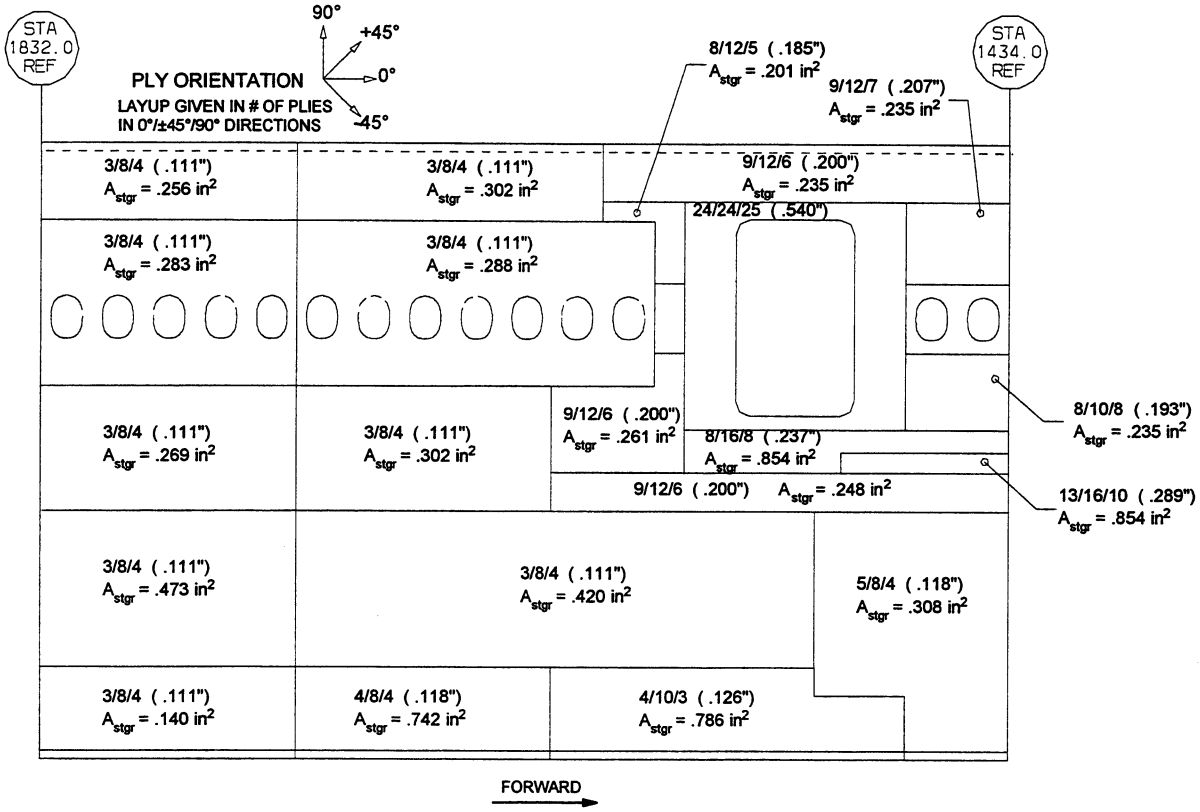

Figure 4-3. Design Family B Skin Thicknesses and Stringer Cross-Sectional Areas

The skin outer mold line (OML) and inner mold line (IML) fabric plies will be located with an automated fabric placement machine followed by a vacuum compaction cycle. Minimal hand working may be required to correctly position the fabric plies. The skin layup was assumed to use automated fiber placement with Tow Cut-and-Add (TCA) head technology; the skin will be fiber placed directly onto an OML INVAR cure tool. Projected fiber placement rates are 25 pounds per hour with a 5.74-inch wide band comprised of 32 individual prepreg tows. It was further assumed that the TCA head would fiber place over all cutouts except for the passenger door. The TCA head will be supported by an overhead gantry system similar to that shown in Figure 4-4. The OML tooling concept (Figure 4-5) was selected to avoid the complexity associated with a large number of high-tolerance tool components required on an IML tool to accommodate the cocured stringers and precured frames. One point in favor of an IML tool is the accurate, repeatable location of the cobonded elements to the skin panel.

All stringer cross sections are a "J" shape, except for the blade stringers located at the window belt and at the passenger floor water line. This later stringer provides attachment for the passenger floor with its outstanding flange angled relative to the side panel such that it is parallel to the floor. Blade stringers were considered early in the study for all stringer locations due to their lower manufacturing cost, but were eliminated due to poor crippling performance. The stringers do not drop plies within across the cross-section, but do drop plies in the lengthwise direction. The stringers are fiber placed into eleven distinct prepreg charges, formed with a hot drape process, cured on INVAR layup mandrels, and trimmed to produce thirty-three separate

stringer detail parts. Precured stringers were selected to reduce the panel cure tool complexity required for cocured stringers. To reduce the stringer tooling cost, they are cured as straight elements with no taper or joggles to account for skin panel thickness variation. This in turn restricted the skin laminate ply drops to a ratio of 300:1.

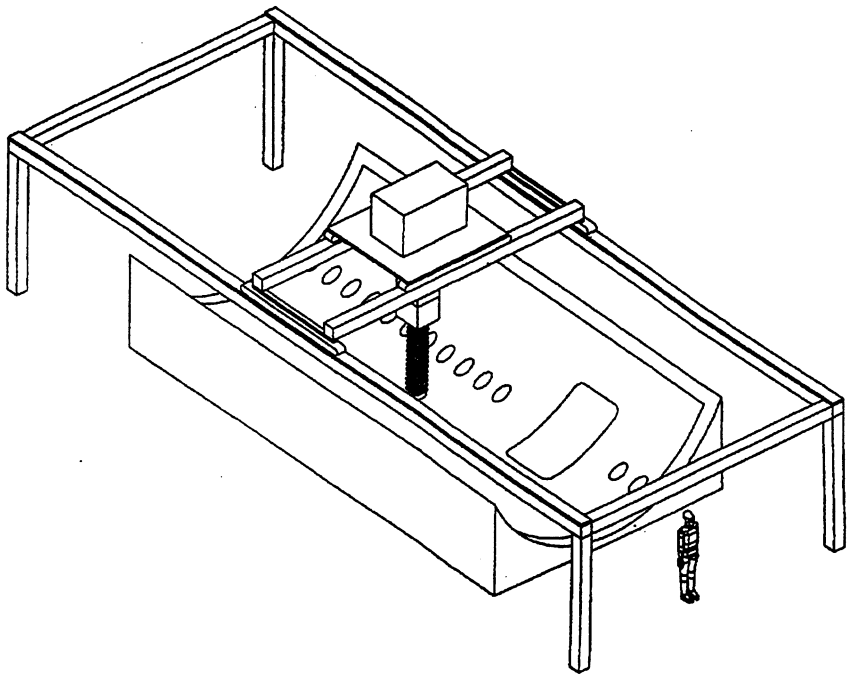

Figure 4-4. Automated Fiber Placement Machine

The integral window belt skin doubler/window frame element is a three-dimensional braided preform of dry AS4 fiber coated with powdered epoxy resin designed by Lockheed. As shown in Figure 4-6, this reinforcement structure incorporates a circular frame around the window cutout along with spanwise blade stiffeners immediately above and below the window. Radial tolerances will be critical to the fabrication process because all mating surfaces of the window belt detail must maintain intimate contact with the skin during cure for successful bonding. Due to the high bulk factor associated with the powder coated preform, several debulk cycles will be required. The window belt detail will then be cured using reinforced caul tooling prior to assembly on the skin panel.

The skin panel fabrication is completed with location of the pre-cured stringers and the integral window belt skin doubler/frame details. This is accomplished with the aid of a bond assembly jib which holds all the precured elements in position as shown in Figure 4-7 while film adhesive is applied to the mating surfaces. The entire jig is then rotated onto the uncured skin on the OML cure tool. No positive locating techniques (i.e., hard tooling pins) will be employed to hold the precured elements in position during cure due to concerns regarding cure shrinkage and panel warpage. The entire skin panel assembly is then autoclave cured. After cure, the panel is inspected using through transmission ultrasonic (TTU) methods to detect any anomalies such as porosity, imbedded foreign objects, incomplete bonds, or delaminations.

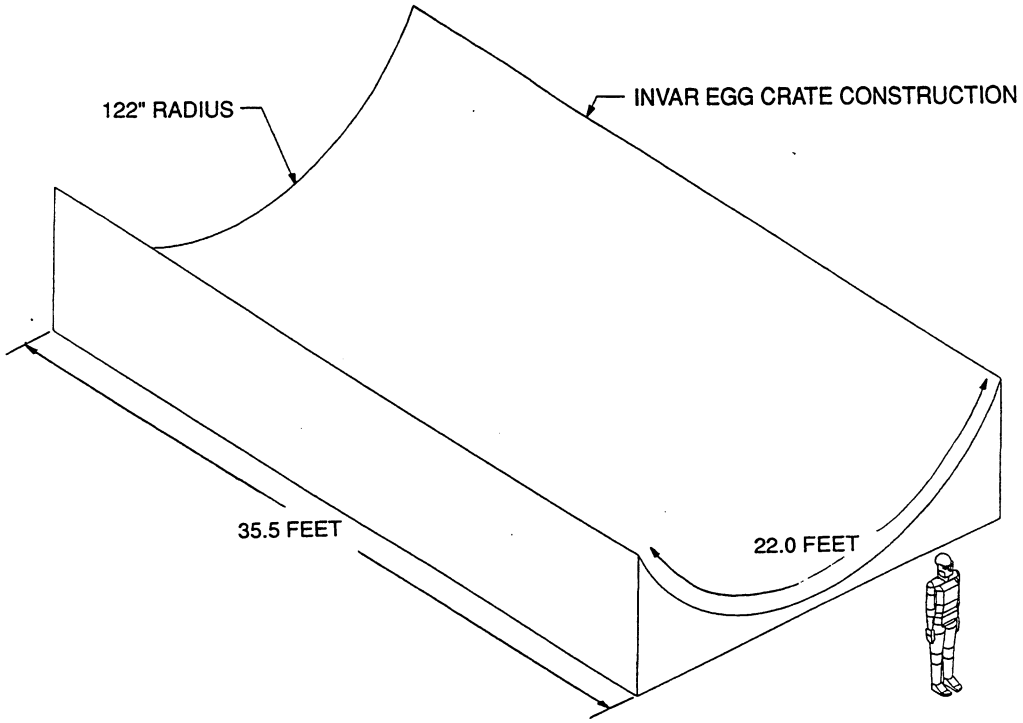

Figure 4-5. OML Cure Tool

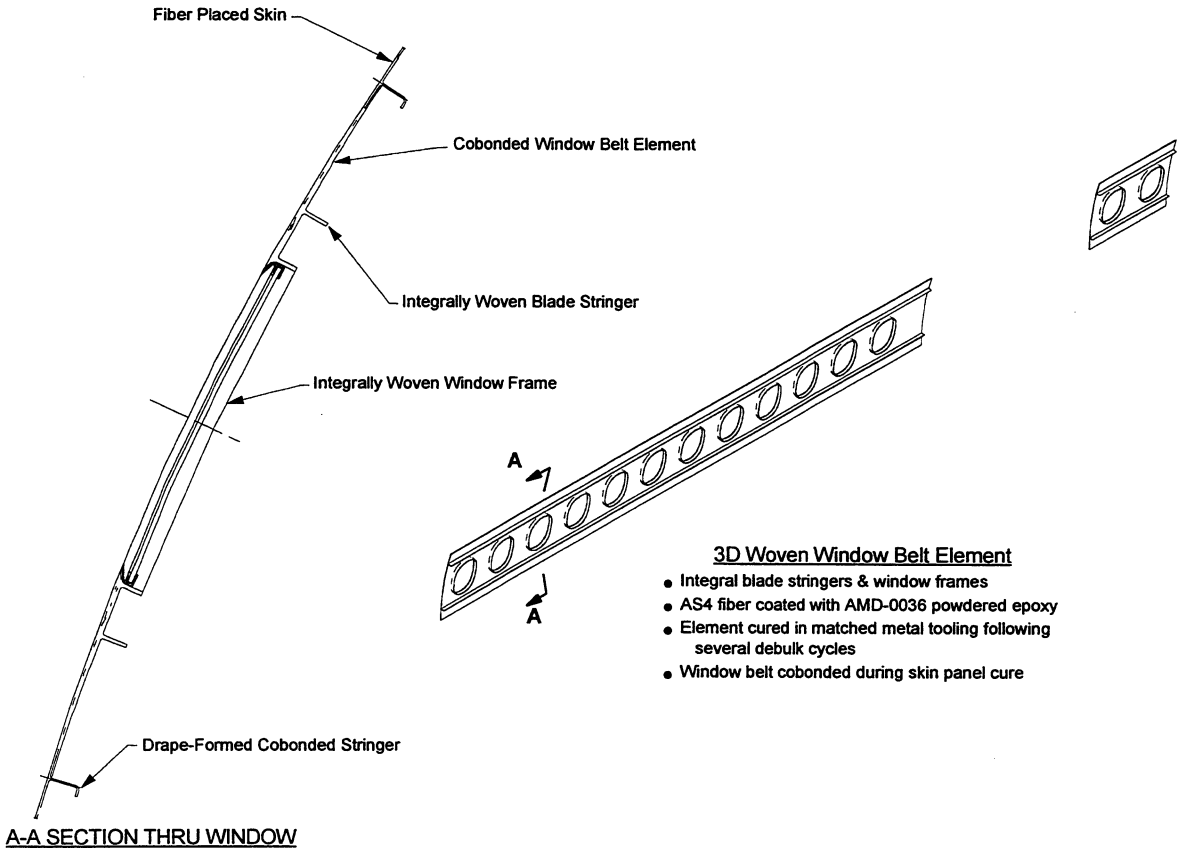

Figure 4-6. Window Belt Reinforcement Structure

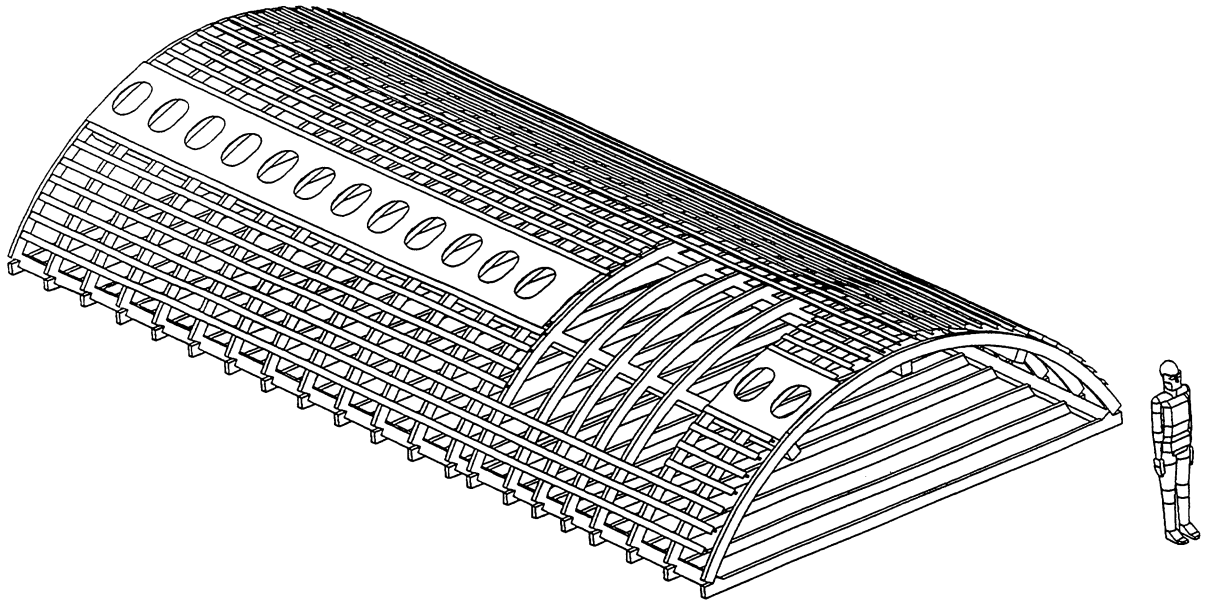

Figure 4-7. Bond Assembly Jig Used to Locate Precured Elements to Skin Panel

The circumferential frames are made from a two-dimensional triaxial braided preform of AS4 fiber which is resin transfer molded (RTMed) with PR-500 resin. The frame cross-section is an "F" shape with the skin attach flange joggled to match changes in the skin thickness. To create the preforms, numerous tows of graphite fiber will be braided around two solid mandrels in three successive passes. The two mandrels are mated vertically, then three more plies are braided over this stack. The braided preform, still on the mandrel, will then be placed inside a RTM tool set. Before the tool lid is placed on the tool set, the base plies are slit and folded outward to create the skin attach flange. Next, the lid is sealed onto the tool and the RTM process initiated. The part is fully cured within the RTM tool. The cured frame detail is removed from the RTM tool and trimmed away from the mandrel. Figure 4-8 shows these fabrication steps. Mouse holes are cut in the frame at each stringer location. Stringer clips, which provide a structural connection between the stringers and circumferential frames, are pultruded from a material with properties assumed equivalent to AS4/3501-6.

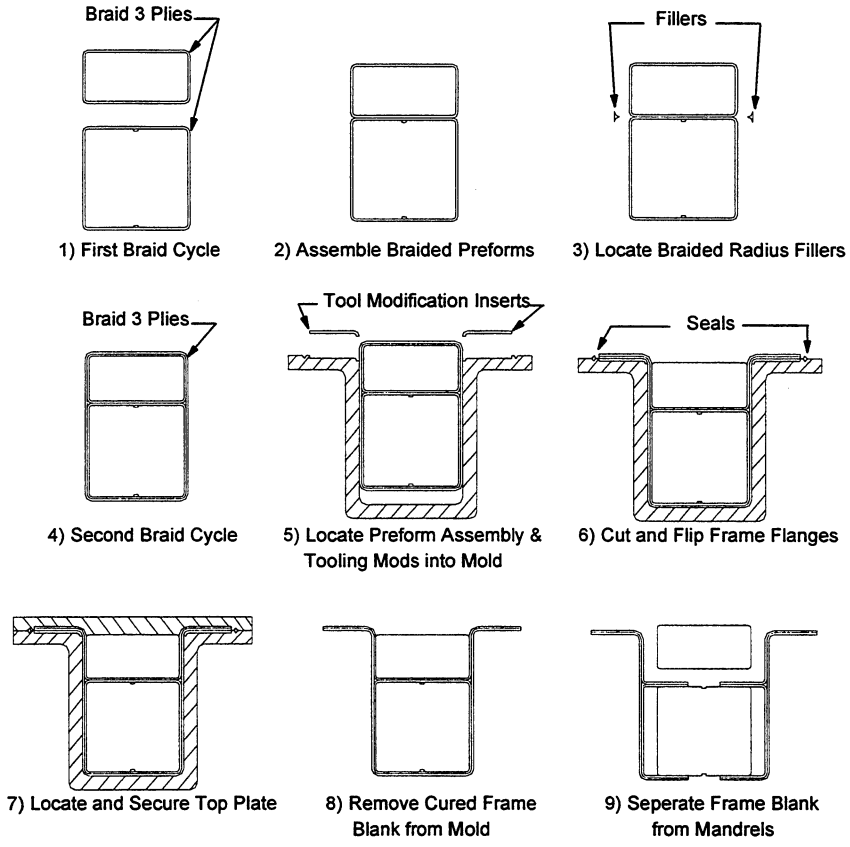

Figure 4-8. Circumferential Frame Fabrication Process

Assembly of the cured circumferential frames to the skin panel occurs in the following sequence. The frames are located into a Floor Assembly Jig (FAJ); liquid and solid shims are applied to the frame flanges per robotic measurements of the skin panel and frame attach flanges. The FAJ is positioned onto the skin panel where a semi-automated drilling and mechanical fastening process

attaches the frames to the cured skin. Stringer clips are positioned, drilled and mechanically fastened at each circumferential frame and stringer intersection. Mechanically fastening the frames to the skin was selected over cobonding (as selected on the ATCAS crown panel) to provide greater dimensional tolerance allowance on the skin-to-frame interface thereby loosening the tolerances which must be held on both the frames and skin panel. (The interaction of shear/compression loading combined with cabin pressure also was a deciding factor for mechanically attached frames, which provided a lower risk alternative to bonding.)

Figure 4-9 shows the door cutout support structure. Auxiliary and edge frames are made from the same material and process as the circumferential frames but with significantly heavier gages. The edge frames are a "C" cross section, and the auxiliary frames are a "Z" cross-section. The door sill inner chords are "L" sections made from a hybrid IM6/8552 tape and fabric laminate. The center sections of the outer chords feature integral flanges for stub frame attachment above and below the door. The door stop intercostals, also made from IM6/8552 tape and fabric, feature an integral skin attachment flange that joggles from the skin inner mold line over the edge frame flange. Door stop backup fittings are machined from a pultruded "T" section; the preform is a combination of tape and fabric using a material providing properties equivalent to AS4/3501-6.

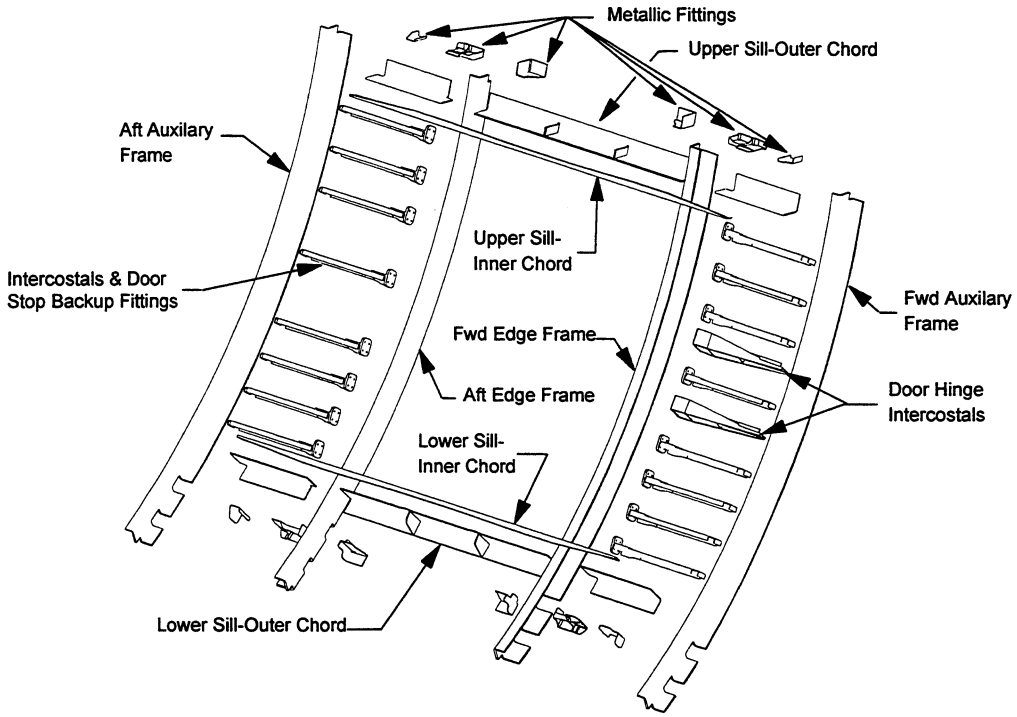

Figure 4-9. Door Surround Structure Assembly

After fabrication, the edge, auxiliary and sill details are mechanically fastened together to form an "eggcrate" assembly; this subassembly is then mechanically fastened to the skin panel. A combination of liquid and hard shims are applied at the skin to door structure interfaces where

necessary. Following this, the intercostals and stub frame splices are installed, again using mechanical fasteners.

Metallic fittings are used in locations where the nature of the loading (e.g., radius bending, short edge margins) renders composite laminate elements impractical. This includes locations such as door hinge intercostals, door sill to frame joints, stringer runout into the main landing gear wheel well bulkhead, and cargo floor beam splices. Titanium (6Al-4V annealed plate) was originally specified in these applications to avoid the need for galvanic corrosion barrier fiberglass plies on the composite parts. However, after the initial cost estimates were generated, these elements were reconfigured to be aluminum with fiberglass isolation to realize a significant cost savings due to faster aluminum machining rates and lower raw material costs. Some representative metallic parts are shown in Figure 4-10.

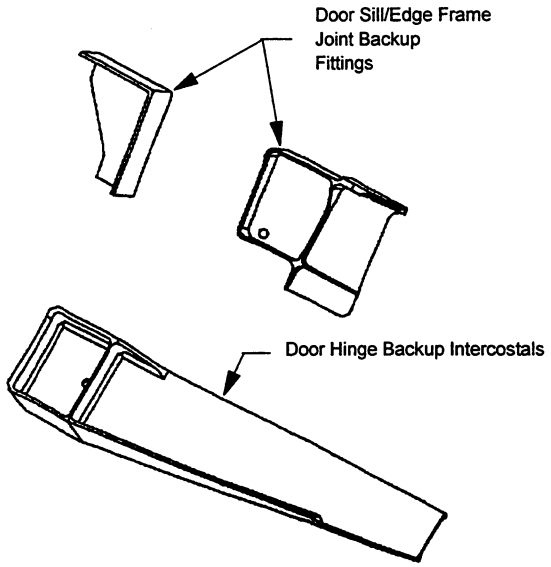

Figure 4-10. Typical Family B Metallic Fittings

Assembly of the Section 46 is accomplished in a FAJ which holds the panels in position while splice holes are drilled and fasteners installed. After the keel panel is loaded in the FAJ, the two side panels are located in position (Figure 4-11) and the skin lap splice fastener holes are drilled and the fasteners installed. A combination of solid and liquid shimming is used to accommodate any fit-up gaps at the splice. The circumferential frames are joined between panels with splice sections (cut from precured braided RTMed channels) using mechanical fasteners (see Figure 4-12). Passenger floor beams (pultruded from IM6/8552 tape and fabric in a "C" cross-section), passenger floor beam stanchions (which are a hot drape formed "Z" section with a joggle in the web), cargo floor beams, floor beam splices, and left- and right-hand overwing longeron extensions are installed next as depicted in Figures 4-13 through 4-15. Assembly of the barrel section is completed with installation of the crown panel using lap splices as was done for the side-to-keel panel splices.

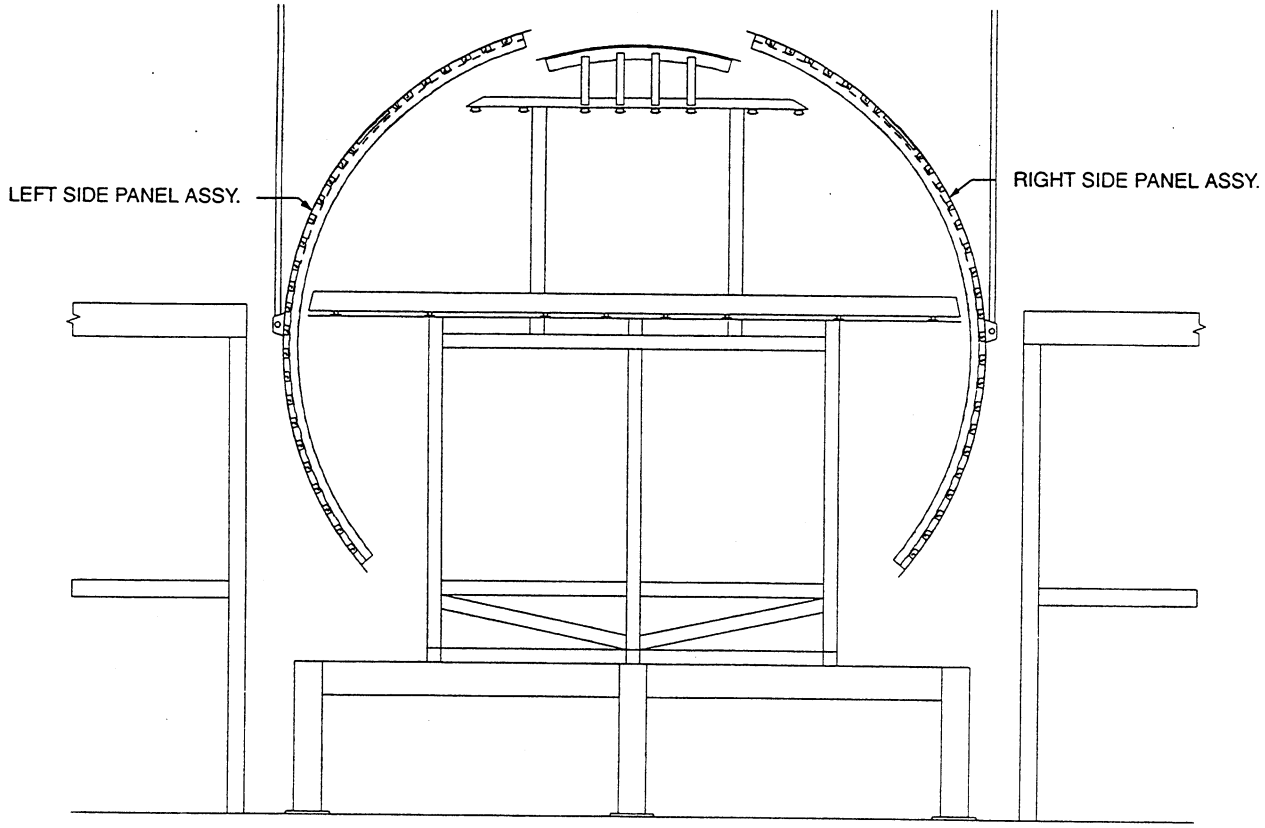

Figure 4-11. Section 46 Assembly Process Showing Positioning of Side Panels

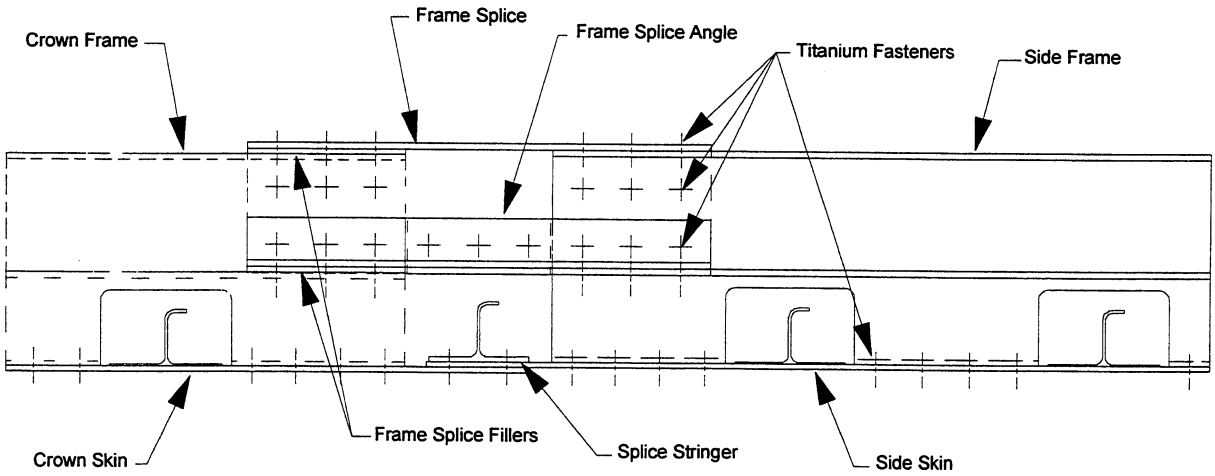

Figure 4-12. Longitudinal Panel Splice

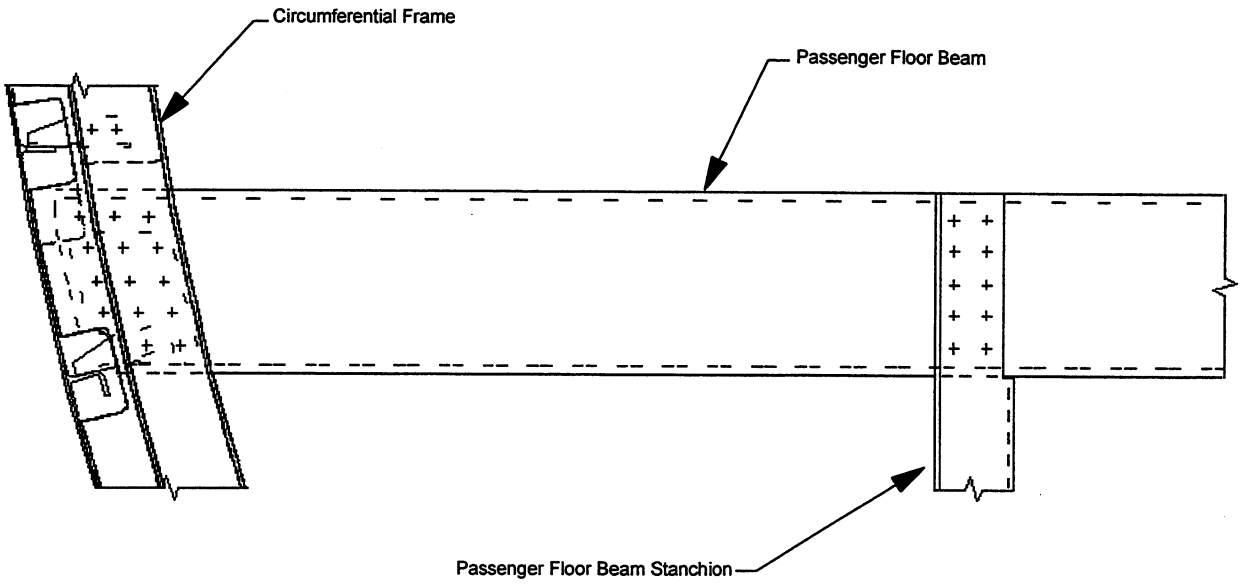

Figure 4-13. Passenger Floor Beam and Stanchion Installation

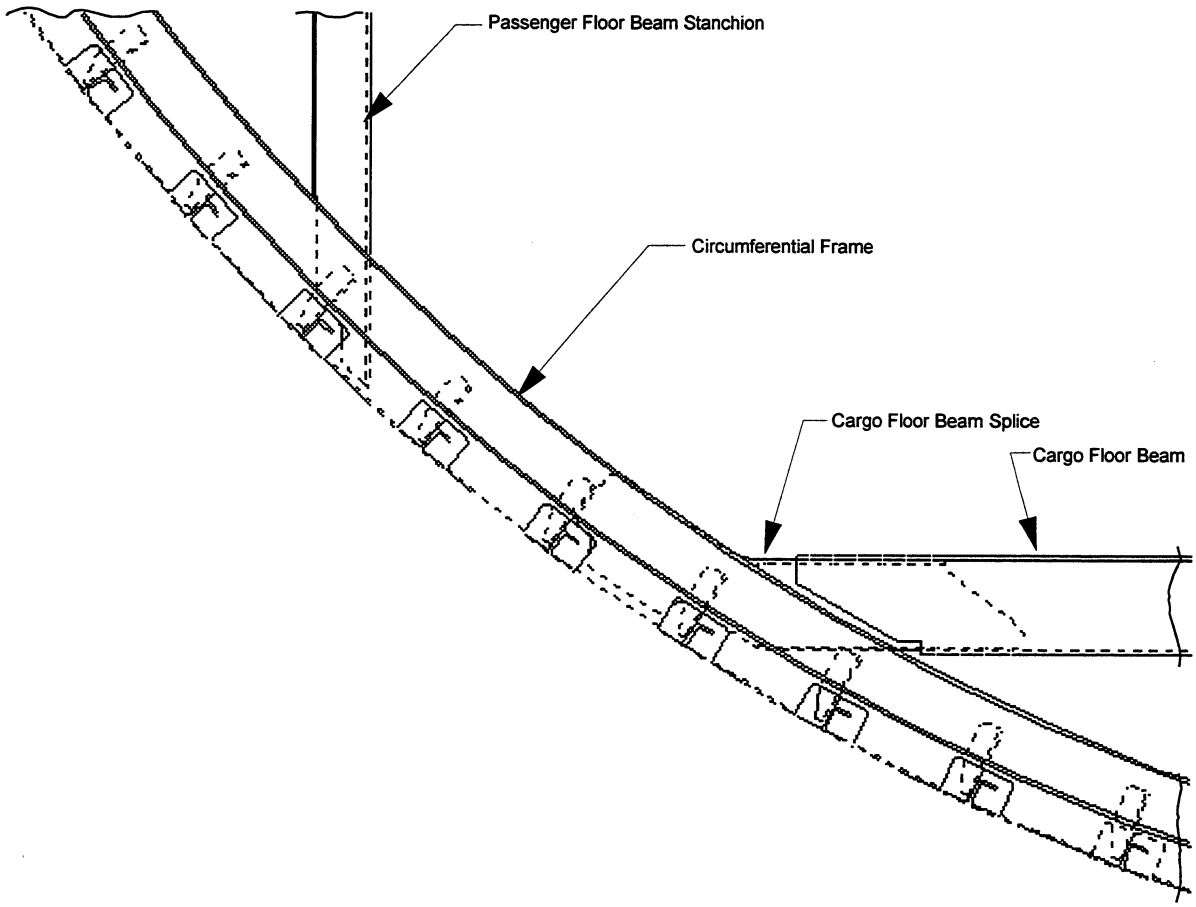

Figure 4-14. Cargo Floor Beam and Passenger Floor Stanchion Installation

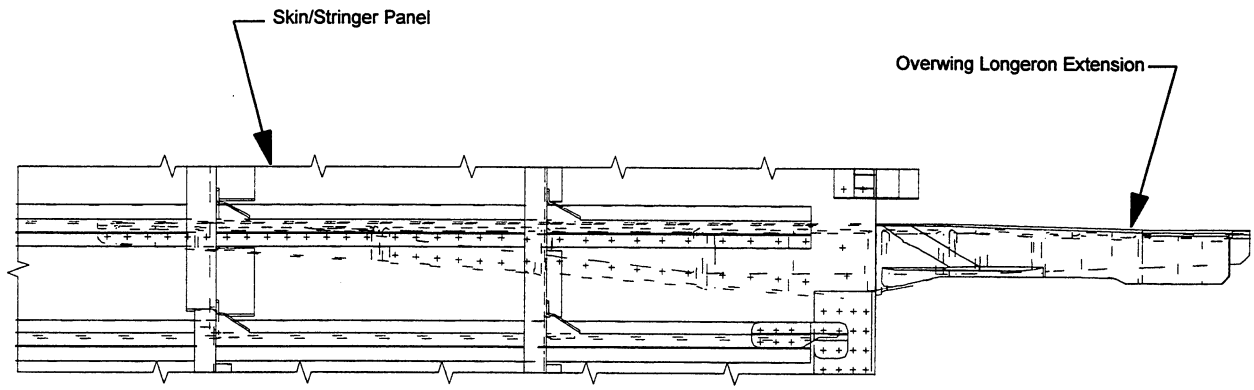

Figure 4-15. Overwing Longeron Extension Installation

Joining of Section 46 to the sections forward and aft is conducted through a butt-splice configuration. The completed fuselage sections are brought into position in a FAJ. Internal and external circumferential splice straps are located in place; any gaps are shimmed up to allowable limits using a combination of solid and liquid (moldable) shim materials. The splices are then drilled and mechanical fasteners installed; stringer splice fittings are similarly located, shimmed and fastened. Titanium eddy-bolts are used throughout the Family B design for mechanical assemblies.

4.1.3 Family B - Critical Issues Identified

The design study described above revealed several structural issues which must be resolved prior to proceeding with the Family B design in a production environment. These include verification of panel stability under combined compression-shear loading with cobonded open section stringers, stringer termination at the passenger door, and validation of the fuselage frame mouse-hole detail. Experimental verification of skin-to-stringer bond integrity under combined shear and compression loading must be demonstrated as well as performance and inspectability under fatigue conditions. Analytical and experimental verification of design details associated with large cutouts is also required to maximize the efficiency of this large cost center for the side panel.

Manufacturing issues for the Family B skin-stringer side panel are magnified by the large panel size. Demonstrating repeatable accurate location of the cobonded window belt and stringers will be critical to successful fabrication of the skin panel assembly. Resin transfer molding process uniformity and repeatability are concerns for the 20-foot long fuselage frames, as well as validating the flexible tooling concept which was assumed to reduce tooling cost through the use of removable inserts. Cost-effective layup of the 600 square foot skin laminate charge must be demonstrated, particularly in light of the design complexity associated with local fiberglass protection plies and provisions for systems attachments not explicitly addressed in this study. Also, assembly methods must be validated to ensure repeatability and reliability to maximize the efficiency of this large cost center. Finally, both production and in-service quality assurance procedures must be demonstrated. Overall, the Family B design presents lower manufacturing risk than the Family D design.

4.2 Family D Design

A single sandwich panel configuration, designated Design D1, was developed as depicted in Figure 4-16; representative engineering drawings are located in Appendix C. As for the Family B design, the general side panel configuration, including location of passenger doors, window pitch, and structural hard points (e.g., the overwing longeron) was established at the airplane level and was not varied for this study. The circumferential frame spacing was also fixed for the initial study, however the design optimization phase of the side panel global evaluation considered weight and cost advantages of increasing the frame spacing. Finally, to reduce manufacturing complexity (and hence cost) associated with circumferential frame fabrication and assembly, the sandwich shell was constrained to a uniform thickness throughout the entire panel.

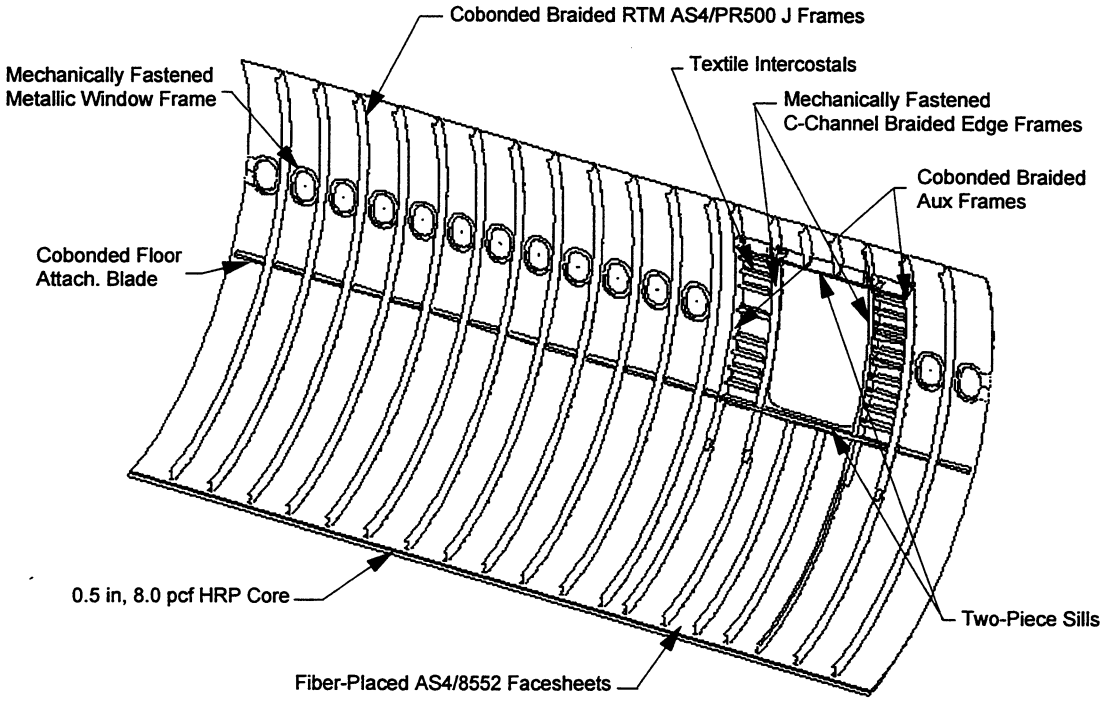

Figure 4-16. Family D (Sandwich) Side Panel Assembly

4.2.1 Family D - Design Description

The Family D critical design drivers are illustrated in Figure 4-17. The criteria described in Section 3.5 was used for structural sizing with the axial damage tolerance calculations based on a nominal skin penetration length of 14 inches. (This dimension, representing large rogue damage, was selected for consistency with the Family B design criteria.) As for the Family B design, circumferential damage tolerance was checked with a penetration severing a frame plus the two adjacent frame bays of skin for a maximum damage length of 42 inches. Hoop and axial damage tolerance dictated the design of the majority of the aft two-thirds of the panel. The compression loads increase in the lower side, requiring thicker facesheets to prevent panel buckling. (The

manufacturing constraint to maintain a constant sandwich thickness over the entire panel forced a compromise between local structural efficiency and overall panel weight savings where the off-optimum core height plus thicker facesheets in the lower side area carried a smaller weight penalty than increasing the core thickness over the mid and upper regions of the panel.) The forward lower region is in a load shadow caused by the main landing gear wheel well bulkhead; shear buckling sized the structure in this area. An eight-ply outer facesheet minimum gage criteria was also imposed to accommodate potential hail- and Zone 2 lightening-strike durability requirements. Due to the added trade study constraint to maintain equivalent inner and outer facesheets, this criteria drove the design in lower loaded areas such as the panel lower forward and upper aft corners. Finally, one structural ply of plain weave graphite fabric was specified on the outer surface of each facesheet to preclude fiber breakout during drilling or trimming operations and on the inner facesheet surfaces against the honeycomb core to prevent migration of the core details during skin panel cure.

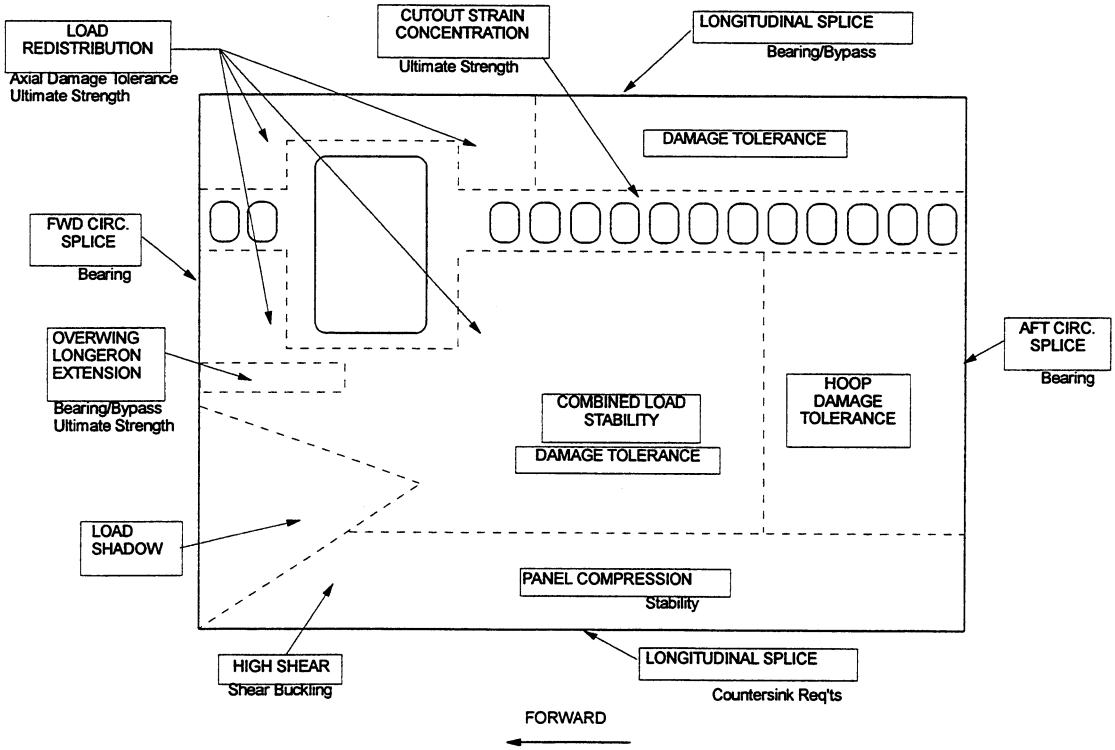

Figure 4-17. Sandwich Critical Design Drivers

The regions adjacent to the window cutouts are governed by ultimate strength due to strain concentrations under maximum shear combined with axial and hoop loading. The passenger door cutout skin doubler was also sized for ultimate strength under combined axial, shear, and hoop load conditions. Higher small-notch ultimate strength of the AS4/8552 facesheet material allowed 20 to 30 percent thinner laminates in these areas than was possible for the Family B design. Circumferential frame design drivers were identical to those for Family B, however, a fail-safe flange was not required because the sandwich design did need mouseholes. Because of

the higher bending stiffness afforded by the sandwich construction and the absence of mouseholes, the required fuselage frame cross sectional area was approximately 10 percent less than the Family B frames. The passenger door edge and auxiliary frames, upper and lower sills, and door stop intercostals were sized to the same ultimate and fail-safe conditions as the Family B door structure and hence were quite similar. The longitudinal and circumferential splices were sized by either bearing/bypass strength or minimum thickness required for countersunk mechanical fasteners. A mechanically fastened frame was located at the forward and aft circumferential splices to ensure a boundary is formed to prevent panel buckling through the splice. Bearing/bypass concerns also sized the area surrounding the overwing longeron extension due to highly concentrated axial loads at this location.

4.2.2 Family D - Manufacturing Approach

Manufacturing assumptions made in support of this study are consistent with those used throughout the ATCAS program. Namely, no constraints regarding factory size or capital requirements were considered. In addition, relatively near-term technologies (available within the next five to ten years) were assumed for the major fabrication processes. The following discussion describes the basic manufacturing processes identified for the Family D design, given in the order in which fabrication would occur.

The design utilizes nominally 0.5-inch thick 8.0 pound per cubic foot fiberglass/phenolic (HRP) honeycomb core (3/16-inch cell size) while the facesheets are AS4/8552 with a nominal resin content of 35 percent by weight. Both of these material systems were selected for compatibility with the ATCAS keel panel for which extensive sandwich panel material screening evaluations were performed (Ref. 19). The design features constant sandwich panel thickness achieved by varying the nominal core height to accommodate variations in facesheet laminate thickness. The core thickness ranges from 0.500 inches in the lower mid section to 0.581 inches in the upper aft section, thus maintaining a constant 0.701-inch panel thickness.

The facesheets will be fiber placed (using TCA technology) directly onto a female OML INVAR cure tool (Figure 4-5). As for the Family B design, projected fiber placement rates are 25 pounds per hour with a 32 tow, 5.74 inch bandwidth. Based on a trade comparing fiber placement efficiency against material scrap costs, all cutouts except for the passenger door will be trimmed after panel cure. The TCA head will be supported by an overhead gantry system similar to that shown in Figure 4-4. The facesheet inner and outer surface fabric plies will be positioned with an automated placement machine followed by a vacuum compaction cycle; minimal hand working was assumed to properly locate these plies. The inner and outer facesheet layup pattern is shown in Figure 4-18. Selection of the OML tooling concept followed the same rationale as for the Family B design.

Following trimming to near-net thickness, the individual honeycomb core details will be heat formed to match the outer facesheet inner surface. The formed core pieces and the core closeout details will assembled into a core blanket (Figure 4-19) on a core assembly jig. After a single ply of AS4/8552 plain weave 0°/90° fabric and a ply of film adhesive are placed on the jig surface, each core detail will be positioned onto the jig. Foaming adhesive will be located at all core

splices and the entire assembly oven-cured. After final core machining, the cured core blanket will be transferred to the OML skin cure tool for assembly with the facesheets.

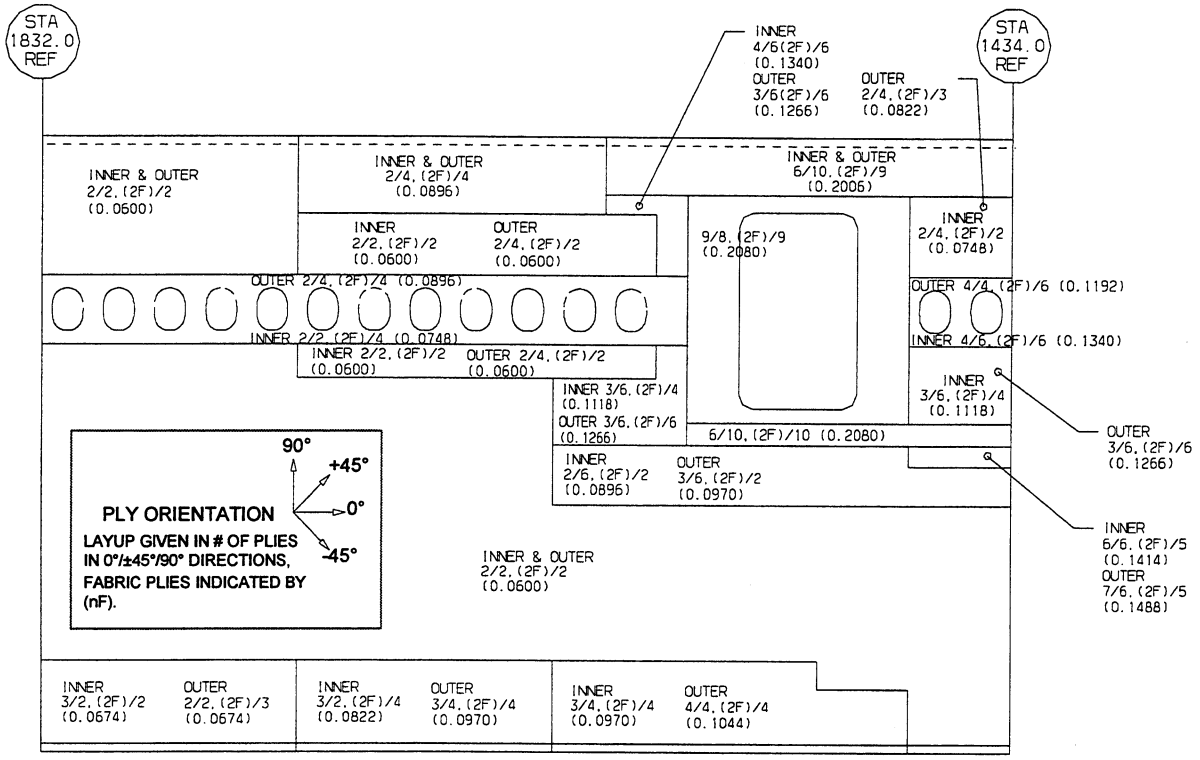

Figure 4-18. Skin Panel Layup Configuration

The circumferential frames have a "J" cross-section as the fail-safe flange is not required for the Family D design. The skin panel constant inner mold surface radius allows for a common frame detail to be located at all frame stations except locally around the passenger door cutout. This significantly reduces part count and frame fabrication, tooling, and installation cost.

Like the Family B design, the frames are fabricated by resin transfer molding a triaxially braided dry preform. To create the frame preform, 12k tows of graphite fiber are braided around a solid mandrel in a total of five passes through the triaxial braider. The preform, still on the braiding mandrel, is placed inside a RTM tool set. Before the tool lid is placed on the tool set, the base plies are slit and folded outward to create the flange for the frame base. Next, the lid is sealed onto the main tool and the RTM process is initiated. The part is fully cured within the RTM tool. The cured preform is removed from the tool and trimmed away from the mandrel. Figure 4-20 illustrates this process. Lastly, the part is final trimmed and inspected.

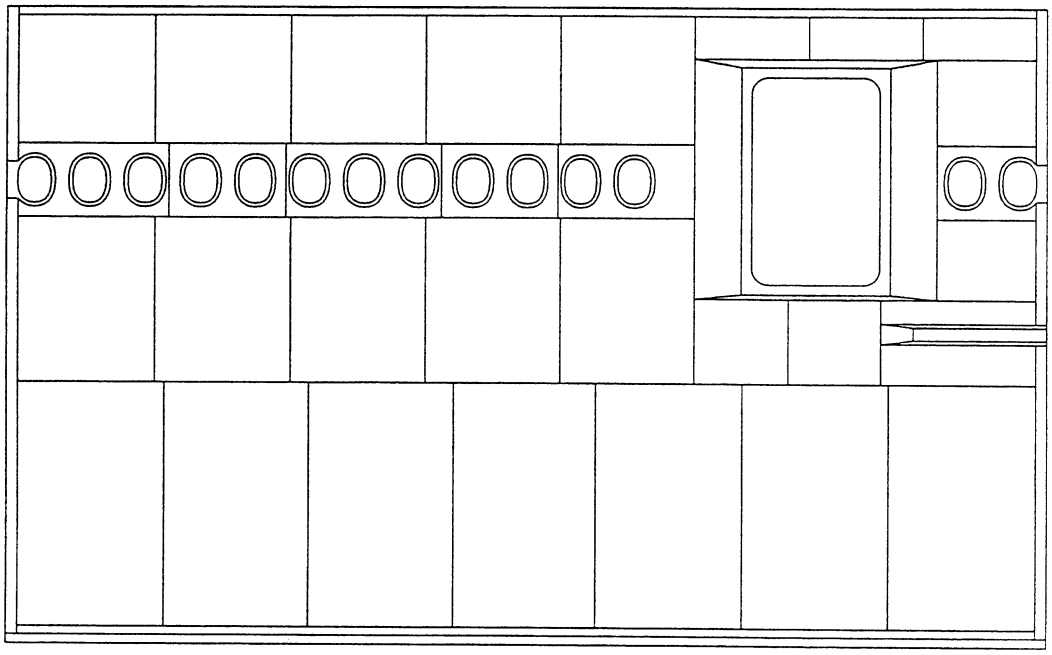

Figure 4-19. Assembled Core Blanket

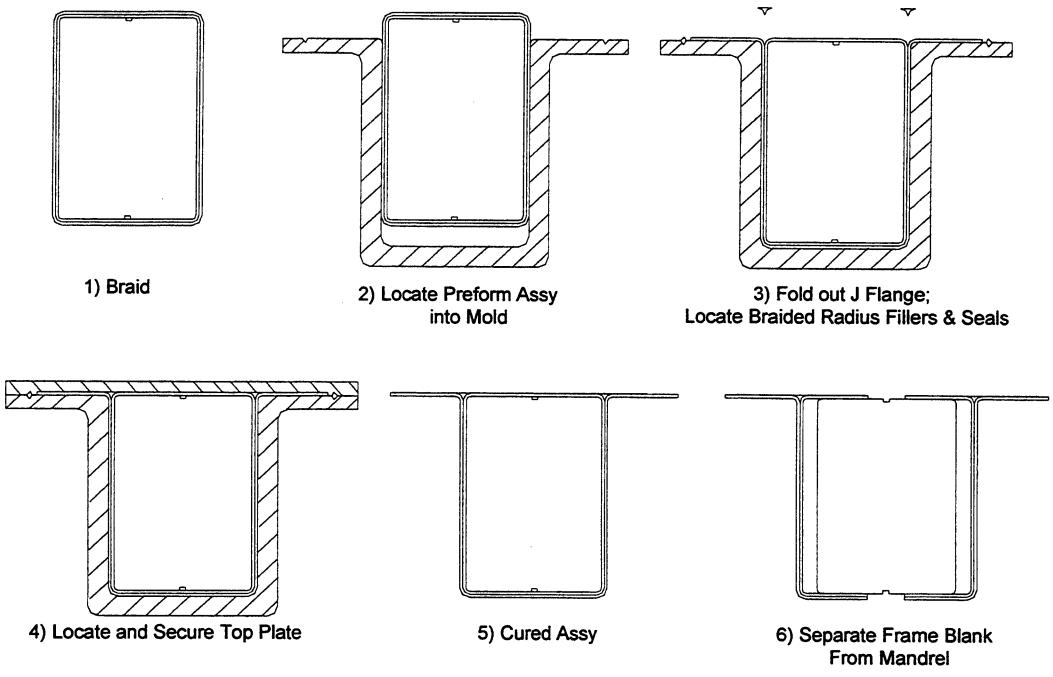

Figure 4-20. "J" Frame RTM Fabrication Process

Full depth edge bands were selected for the side panel perimeters as well as around the window cutouts. The edge bands avoid (a) the complexity associated with fabrication of core ramps and (b) the cost associated with automated fiber placement of ramped facesheet contours while providing a closeout for the core designed to resist penetration of contaminants from the external

environment. Closeout materials were selected to provide the strength required for mechanically fastened attachments such as window frames, panel splices, aircraft systems attachments, and pressure shell penetrations. Window and circumferential splice closeouts are fiber reinforced injection molded solid epoxy details which aid in the splicing and attaching of details with mechanically fasteners. The longitudinal splice members are made of three tubular textile preforms that are precured into a single rectangular box configuration that runs the entire length of the panel edge as indicated in Figure 4-21. The tubular concept was selected to provide maximum weight efficiency with sufficient stiffness to react fastener clampup for the four-row longitudinal panel splice.

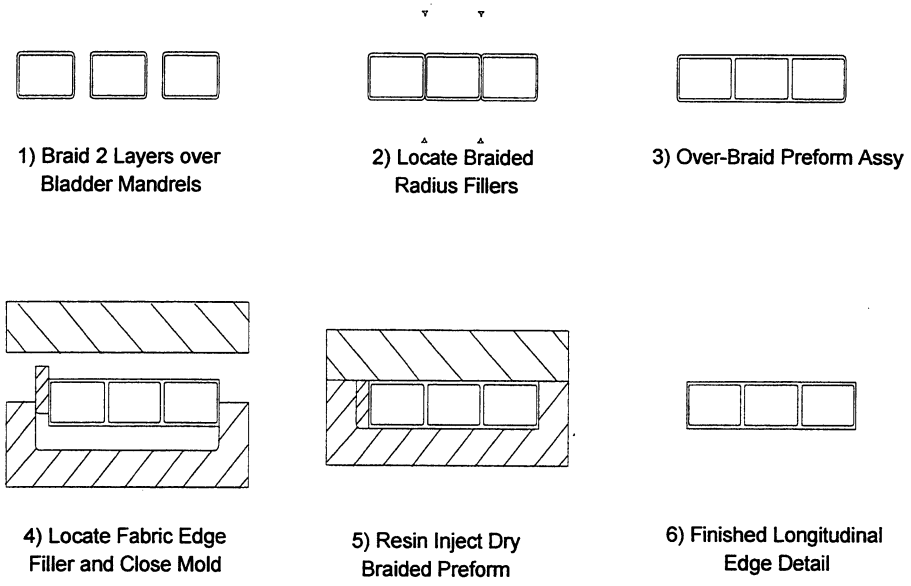

Figure 4-21. Longitudinal Panel Splice Closeout Fabrication

The skin panel fabrication is completed with positioning of the assembled core blanket with closeout details and film adhesive between the facesheets, followed by location of the circumferential frames. The frames are loaded in a FAJ, film adhesive applied to the attach flanges, and the FAJ rotated into position on the sandwich panel. The ends of each frame are held in position by a set of tools attached to the OML cure tool. The resulting assembly is shown in Figure 4-22. Reinforced rubber cauls under a silicon vacuum bag are applied and the entire panel autoclave cured. Cobonding of the circumferential frames avoids fasteners penetrating the sandwich structure with the accompanying potential for fluid penetration.

The window frame consists of a mechanically fastened aluminum forging (Figure 4-23) (similar to those currently used on current production transport aircraft), selected to provide a cost/weight comparison with the Family B textile integral window belt doubler and frame. (Note that this metallic window frame was not optimized for the composite sandwich panel design.) The fasteners penetrate the honeycomb panel at the solid core closeout in order to maintain integrity against fluid ingression. Fiberglass plies cocured on the panel OML and IML surfaces adjacent

to each window cutout provide galvanic isolation between the aluminum frames and the graphite skin; these plies are incorporated into the skin layup sequence.

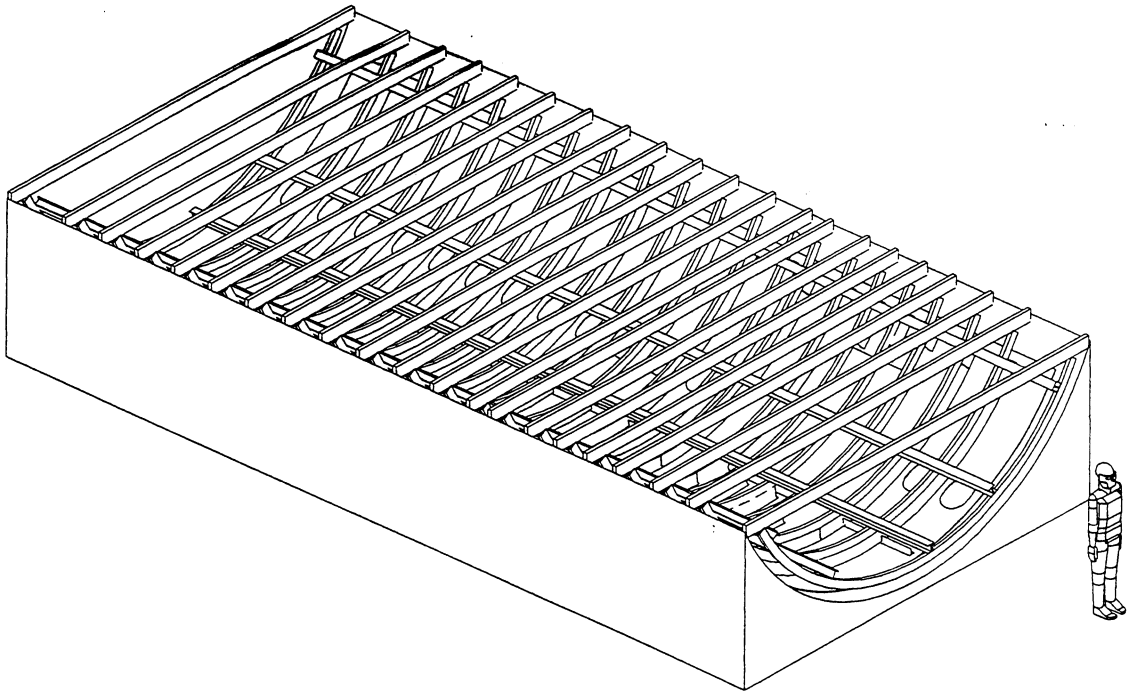

Figure 4-22. Assembly of Precured Details to Sandwich Panel

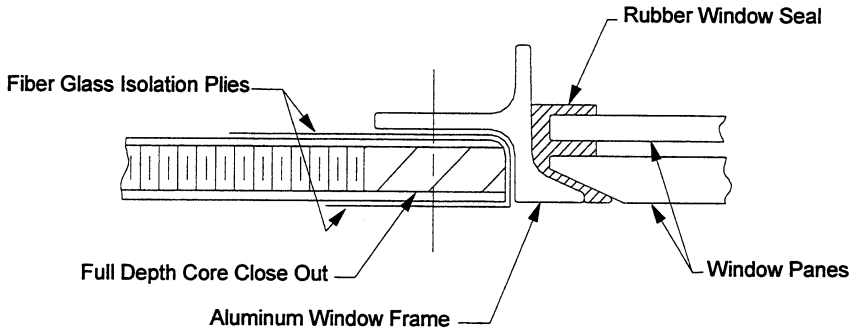

Figure 4-23. Window Reinforcement Structure

At the passenger door, because of the high potential for in-service damage, the edge frames are mechanically fastened, as are the intercostals and sills. Tight tolerances associated with door rigging and operation also drives the use of mechanical fastening. The skin panel transitions from sandwich-stiffened to a solid laminate due to the thickness required at the cutout and to allow for the mechanically fastened door surround structure. The door cutout reinforcement structure is quite similar to that of the Family B design (shown in Figure 4-9), with the most significant differences being the pultruded intercostals and the cobonded auxiliary frames. (The assembly tolerances are less critical for the auxiliary frames, and hence they are cobonded to the

sandwich skin at panel cure to reduce the assembly cost.) Installation of the door structure is also similar for both design families.

As for the Family B design, metal fittings are used in locations where the nature of the loading is such that complex fittings are required. This includes locations such as passenger door hinge intercostals, door sill to frame joints, and cargo floor beam splices. As for the Family B design, titanium (6Al-4V annealed plate) was originally specified in these applications to avoid the need for galvanic corrosion barrier fiberglass plies on the composite parts. However, after the initial cost estimates were generated, these elements were reconfigured to be aluminum with fiberglass isolation to realize a significant cost savings due to faster aluminum machining rates. Some representative metallic details are shown in Figure 4-10.

Assembly of the Family D Section 46 barrel proceeds in the same sequence described for the Family B design. The side panels are attached to the keel and crown panels through a mechanically fastened lap splice configuration with solid and liquid shimming used to accommodate fit-up gaps. The circumferential frames are spliced between panels with "L" sections (cut from precured braided RTM channels) using mechanical fasteners and shimming where necessary (Figure 4-24). "C"-section passenger floor beams (pultruded using IM6/8552 tape and fabric), "Z"-section passenger floor beam stanchions (hot drape formed to accommodate a joggle in the web), cargo floor beams, floor beam splices and left- and right-hand overwing longeron extensions are installed as illustrated in Figures 4-25 through 4-27. (The passenger floor beams were originally designated to use a hot drape-forming fabrication process, but pultruded elements were substituted after comparison of cost results for the Family B and Family D designs.)

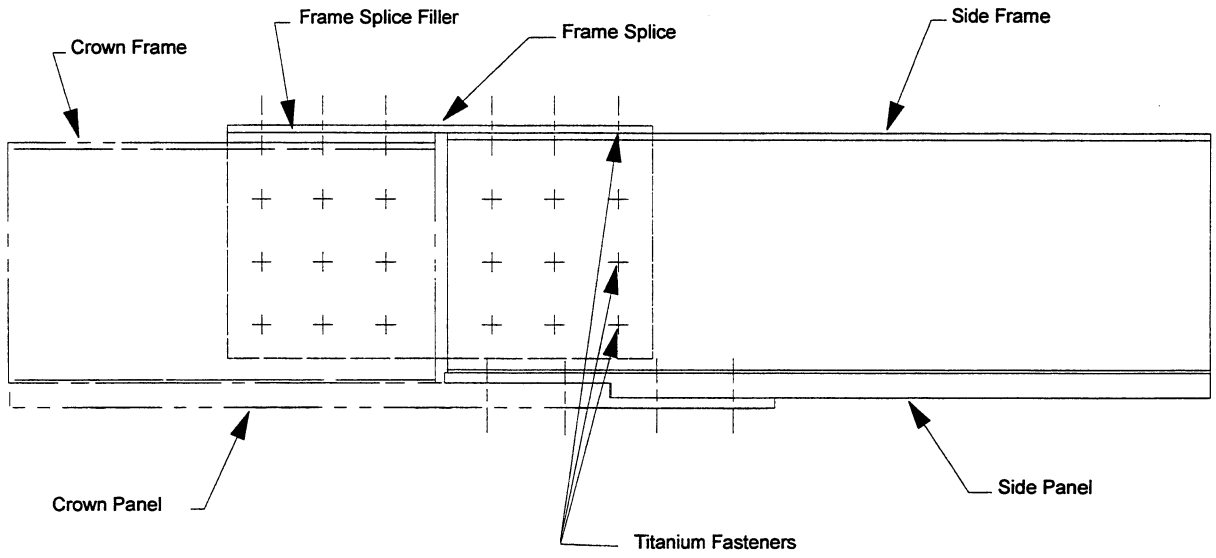

Figure 4-24. Longitudinal Splice

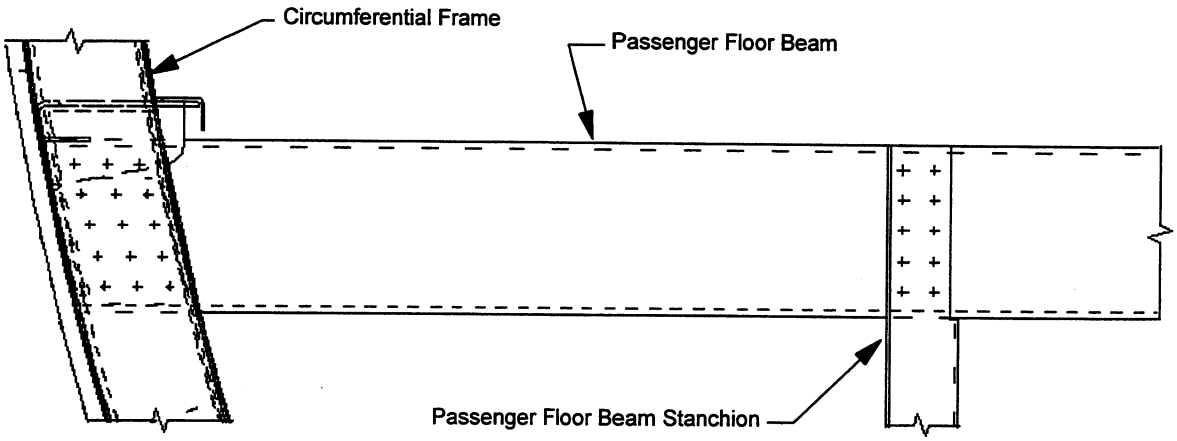

Figure 4-25. Passenger Floor Beam and Stanchion Installation

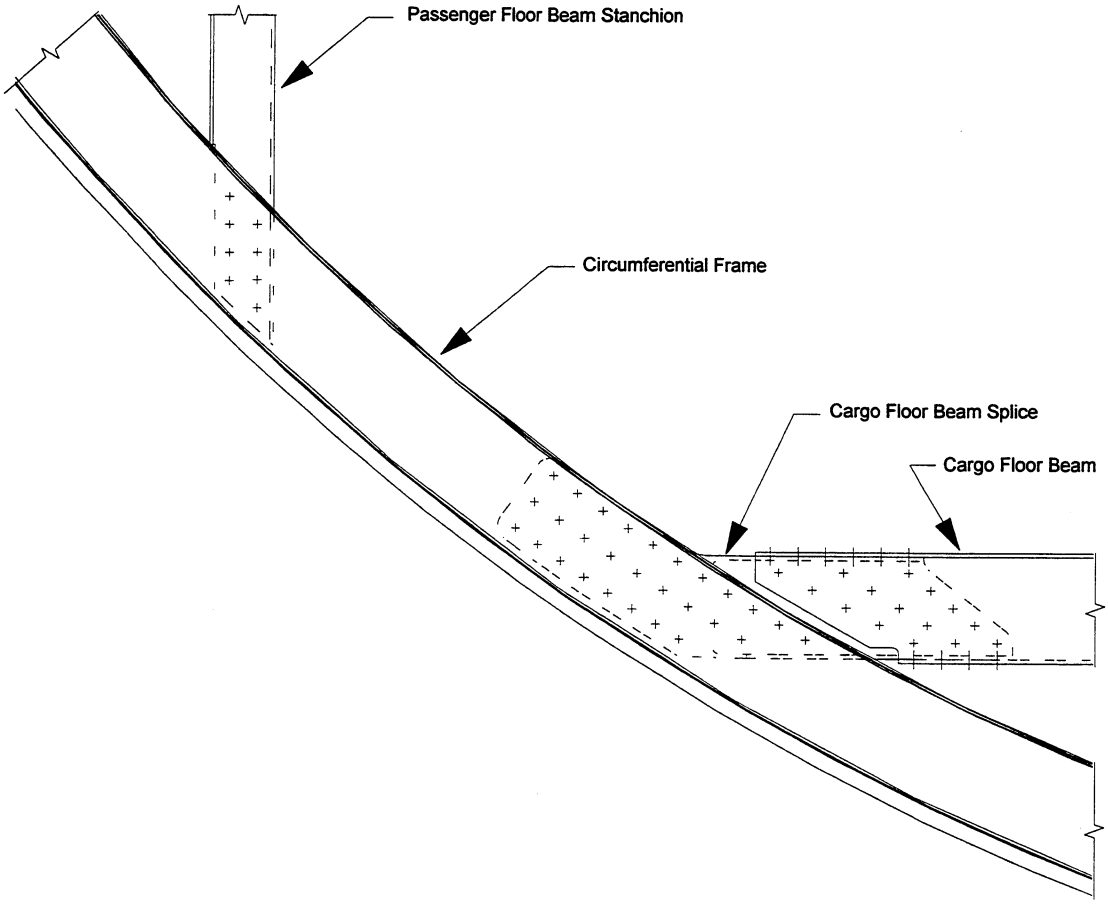

Figure 4-26. Cargo Floor Beam and Passenger Floor Stanchion Installation

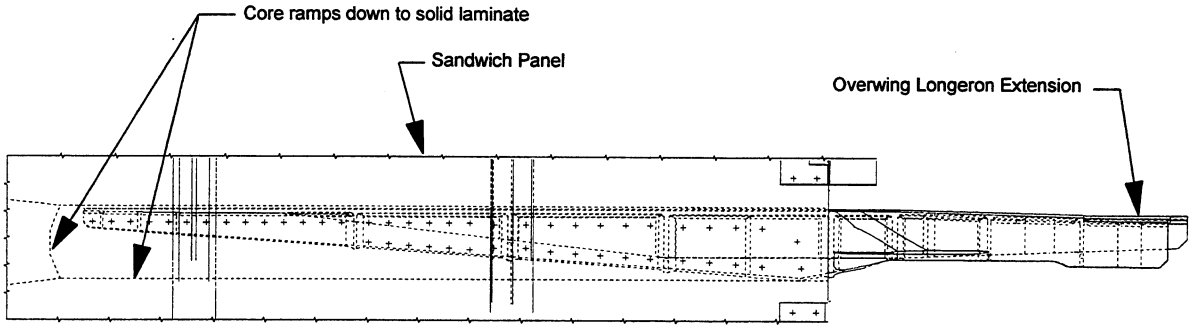

Figure 4-27. Overwing Longeron Installation

The Section 46 barrel is joined to the sections forward and aft through a butt-splice. The assembly sequence is identical to that described in Section 4.1.2 for the Family B design. Titanium Eddy-Bolts are used throughout the Family D design for mechanical assembly.

4.2.3 Family D - Critical Issues Identified

Several structural issues were identified for the Family D design as a result of the design activity. These include verification of damage tolerance performance and characterization of the sandwich configuration in the presence of stress concentrations induced by large cutouts under both static and fatigue loading. In addition, the use of full depth panel splices offers cost efficiencies over a ramped core closeout; however, the full depth splice concept needs to be verified through refined analyses and testing. There are also the historical concerns associated with sandwich structure which include repair, durability, and inspection.

Manufacturing issues for the Family D sandwich side panel are magnified by the large size of the panel, as was the case for the Family B design. Core thickness and fuselage frame tolerances will be critical to successful fabrication of the cobonded/cocured skin panel assembly. Resin transfer molding process uniformity and repeatability are concerns for the 20-foot long fuselage frames although the Family D frames are lower risk than the Family B frames due to their simplified "J" cross-section. Cost-effective layup and handling of the 600 square foot facesheet charges must be demonstrated, particularly in light of the design complexity associated with local fiberglass protection plies and provisions for systems attachments which were not explicitly addressed in this study. Further, the panel size and cocured assembly dictates that high material lay-down rates are achieved to avoid material degradation from excessive out-time. Due to the inherent stiffness of the sandwich configuration, controlling panel warpage will be critical. Also, assembly methods must be validated to ensure repeatability and reliability to maximize the efficiency of this large cost center. Finally, both production and in-service quality assurance procedures must be demonstrated. Overall, the Family D design has a higher manufacturing risk as compared to the Family D design.

4.3 Baseline Aluminum Design

To provide a comparison to the composite designs described above, an aluminum side panel design was utilized to generate cost and weight bases. The structural envelope considered was identical to that for the composite designs. Design drivers for the aluminum side panel were similar to those for the composite designs with the addition of fatigue in the regions adjacent to door and window cutouts. The panel assembly, two-thirds of which is shown in Figure 4-28, assumed state-of-the-art manufacturing techniques. Three skin panels, which feature a combination of integrally machined and mechanically fastened doublers, are spliced to form the side panel. Stringers are either machined extrusions or roll-formed J-sections. Circumferential Z-section frames were assumed to be fabricated from milled extrusion or sheet that is stretch-formed to the proper radius. The frames are connected to the skin panel with brake-formed shear ties and machined extruded stringer clips. Door structure reinforcement is assembled from milled and roll-formed sections. Some elements such as the upper and lower sills are mechanically fastened assemblies built up from individual extruded chords, sheet metal webs, and machined clips. Assembly of the panel is accomplished with a high degree of automated fastening. Furthermore, cost estimates were generated under the assumption that no manual gap gaging or hard shimming was required.

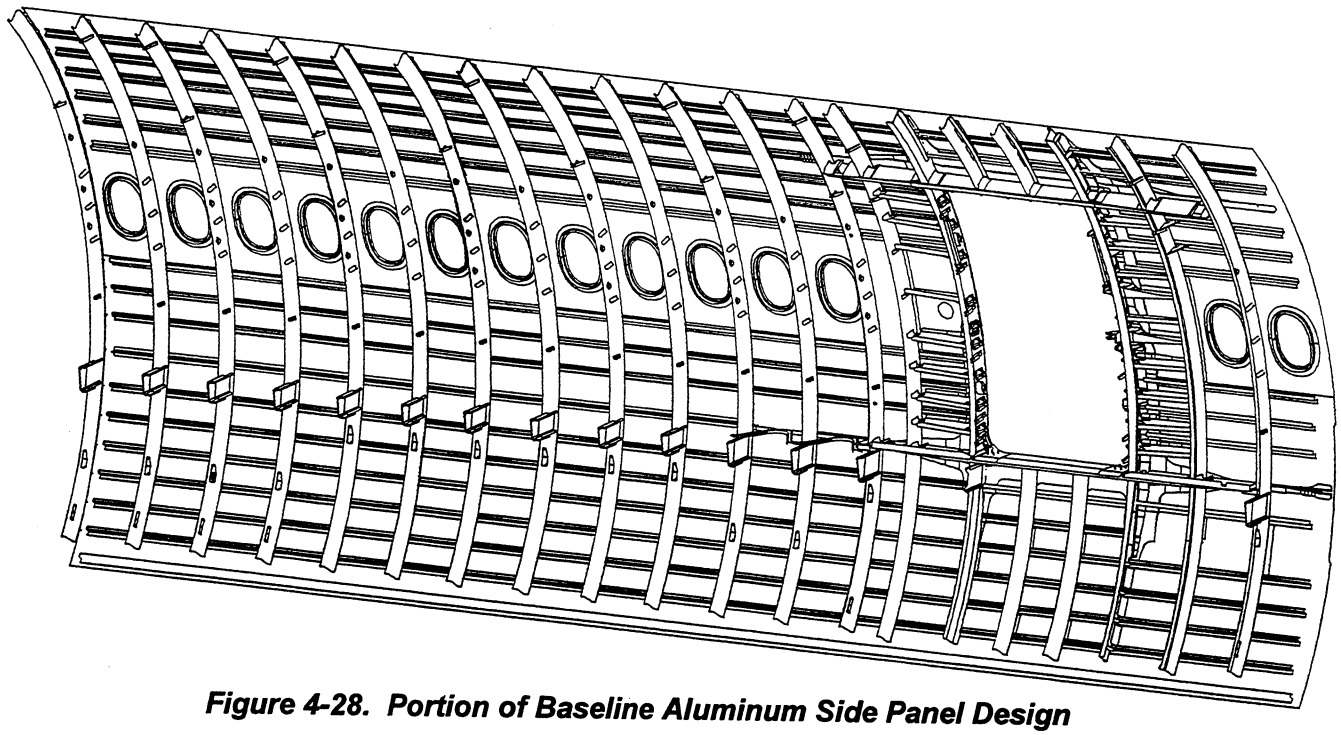

Figure 4-28. Portion of Baseline Aluminum Side Panel Design

4.4 Trade Study Results

Working directly from the engineering drawings and manufacturing plans defining the side panel components as described in the previous sections, the cost and weight of a complete side panel assembled into the fuselage barrel (excluding systems and interiors) was estimated. To improve the accuracy of the cost estimates, the manufacturing plans were broken down to the process step

level (e.g., tool clean, numerical control programming, etc.). The estimates included both nonrecurring (tooling) and recurring labor and material and followed the ground rules described in Section 3.6. Figure 4-29 depicts the trade study results normalized to the cost and weight of the baseline aluminum side panel. Further details of the composite side panel cost and weight estimates are discussed in the following two subsections.

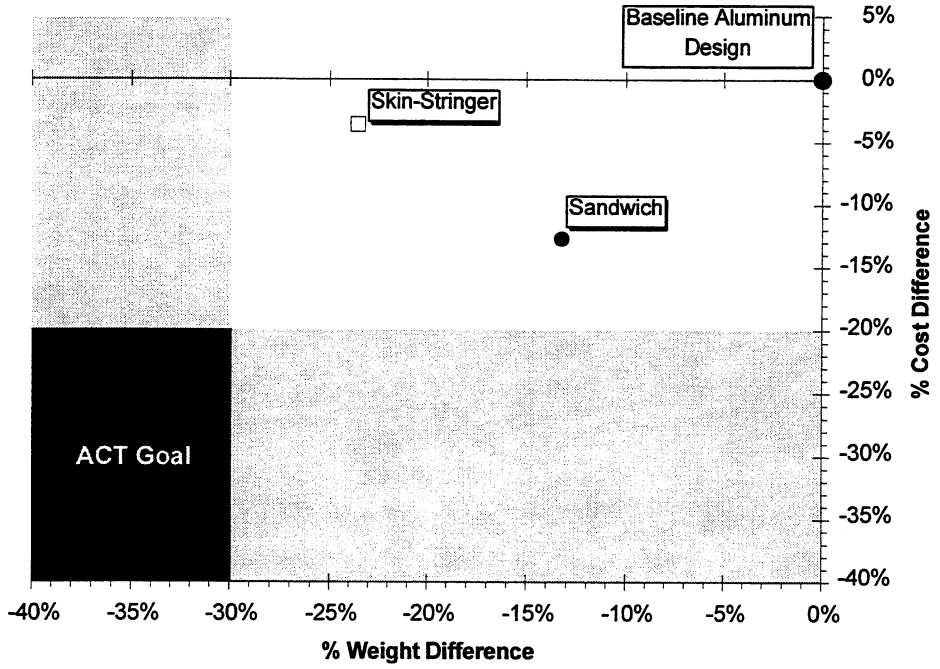

Figure 4-29. Trade Study Results Normalized to Baseline Aluminum Side Panel Cost & Weight

4.4.1 Weight Comparison

The detailed Family B (skin-stringer), Family D (sandwich), and baseline aluminum design weight estimates are summarized in Figure 4-30. The totals, depicted by the bars on the far right, indicate that the Family B design offered the greatest weight savings (23 percent savings over the metallic baseline) while the Family D design provided a 13 percent savings over the metallic baseline. For ease of discussion, the design elements comprising the side panel are grouped into nine major categories. The weight results for each of these categories are discussed below.

The single largest weight contributor to the side panel were the skins. For the skin-stringer design this included the basic skin plus doubler at the passenger door cutout while for the sandwich design the facesheets with integral doublers at the window and doors were included. The 136 pound difference between the two composite designs was attributable to (1) the lack of a window belt doubler for the skin-stringer design (it was included in the window belt weight as the doubler is integral to the window frames) and (2) nearly one-third of the sandwich panel controlled by the eight-ply facesheet minimum thickness constraint. The latter further penalized

the sandwich panel due to the design simplification to maintain identical IML and OML facesheets.

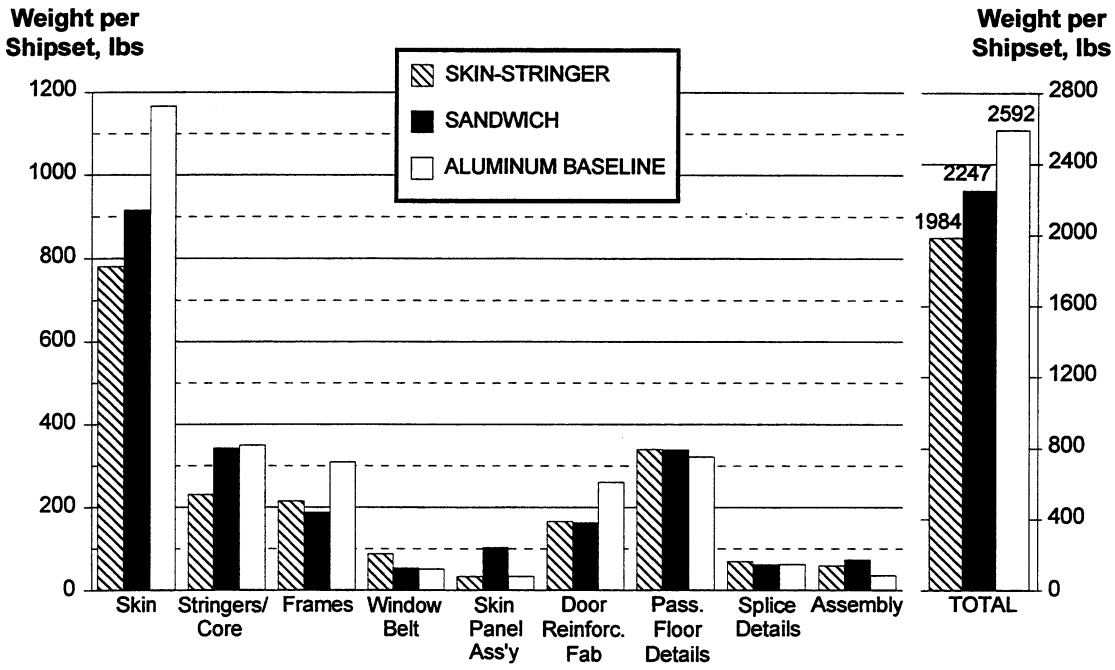

Figure 4-30. Weight Comparison of Side Panel Designs

Skin panel stiffening elements comprise the second category. The majority of the difference between the two composite designs is due to the sandwich panel core closeout elements which are responsible for over one-third (36 percent) of the core weight. The composite skin-stringer design, with wider spaced high stiffness (gained through the use of IM6 fiber) stringers, has one less stringer than the metallic panel. The graphite/epoxy density advantage over aluminum is a driver for the weight savings depicted in the fuselage frames. The differences between the two composite designs results from the mouse-holed skin-stringer frame design's larger cross-sectional area due to the required fail-safe flange and the higher number of braided plies.

Window belt weights for the composite sandwich and metallic baseline were nearly identical as both designs feature metallic frames; the sandwich design was slightly heavier due to the need for isolation between the metal frame and graphite/epoxy skin. The composite skin-stringer weight is higher than the other two due to the incorporation of skin doublers into the 3D woven window frame/doubler element developed by Lockheed.

The skin panel assembly includes all details necessary to assemble the window frames, fuselage frames, and stiffening elements to the skin. For the composite skin-stringer design this includes the weight of the adhesive (used to bond the stringers and window belt to the skin) and the fasteners (used to attach the frames to the skin). The relatively high weight for the sandwich design is primarily due to three full layers of film adhesive required to assemble the facesheets and core. Stringer and fuselage frame fasteners comprise the weight apportioned to the metallic baseline design.

skin/stringer panel floor beams, a slight weight penalty was incurred over more expensive manufacturing methods.

The splice details include the elements necessary to join the side panel to the adjoining fuselage sections (e.g., end frames, splice plates, stringer and frame splice fittings, and cargo floor beam end fittings). The composite skin-stringer and metallic baseline weights are comparable as these elements, with the exception of the end frames and splice plates, are metallic on the composite design. While the sandwich design does not have stringer splice details, the weight of the splice details is only slightly lower than for the skin-stringer design. The prime factor responsible for this is that the external splice plates are considerably thicker than the analogous elements on the skin-stringer design due to fastener countersink requirements. The sandwich panel splice requires larger diameter fasteners (with correspondingly thicker heads) to prevent excessive fastener flexibility with the full-depth splice configurations.

The final category is assembly, which includes the weight of fasteners necessary for mechanical assembly of the door structure, passenger and cargo floors, circumferential and longitudinal panel splices, and frame and stringer splices. The metallic baseline is lower than the composite designs due to the prevalent use of rivets which have little protruding volume. In spite of having no stringers to splice, the sandwich design has a higher assembly weight due to the larger diameter fasteners previously mentioned.

4.4.2 Cost Comparison

The Family B (skin-stringer), Family D (sandwich), and baseline aluminum cost results are summarized in Figure 4-31. The totals, depicted by the bars on the far right, indicate that the Family D design offered the greatest cost savings (13 percent savings over the metallic baseline compared to 4 percent savings for the Family B design). For ease of discussion, the design elements comprising the side panel are grouped into nine major categories. The cost results for each of these categories are discussed below.

The composite designs achieved the greatest cost savings relative to the aluminum baseline design in the skin fabrication. The aluminum design has significant material and labor cost components due to the large amount of machining required to fabricate these elements. The composite skins, on the other hand, benefit tremendously from the highly automated fiber placement process. The sandwich design has a slightly higher skin fabrication cost due the more expensive AS4/8552 material as compared to the AS4/938 material used in the skin-stringer design. Also, the sandwich skin cost includes window belt doubler plies; for the skin-stringer panel, these are integrated into the window frame element. The opposite situation, however, is responsible for the stiffening element cost. The baseline aluminum design utilizes automated stringer fabrication processes such as roll-forming and lightly machined extrusions whereas the composite stringers are manufactured using the drape-forming process requiring a higher degree of manual labor and more complex tooling. The sandwich design's stiffening element cost was inflated by high recurring labor costs for core closeout fabrication and manual assembly of the individual core details. The composite material cost was higher for the skin-stringer design largely due the use of IM6/8552 prepreg tape even though the core details had a higher scrap factor (1.56) than the stringers (1.45).

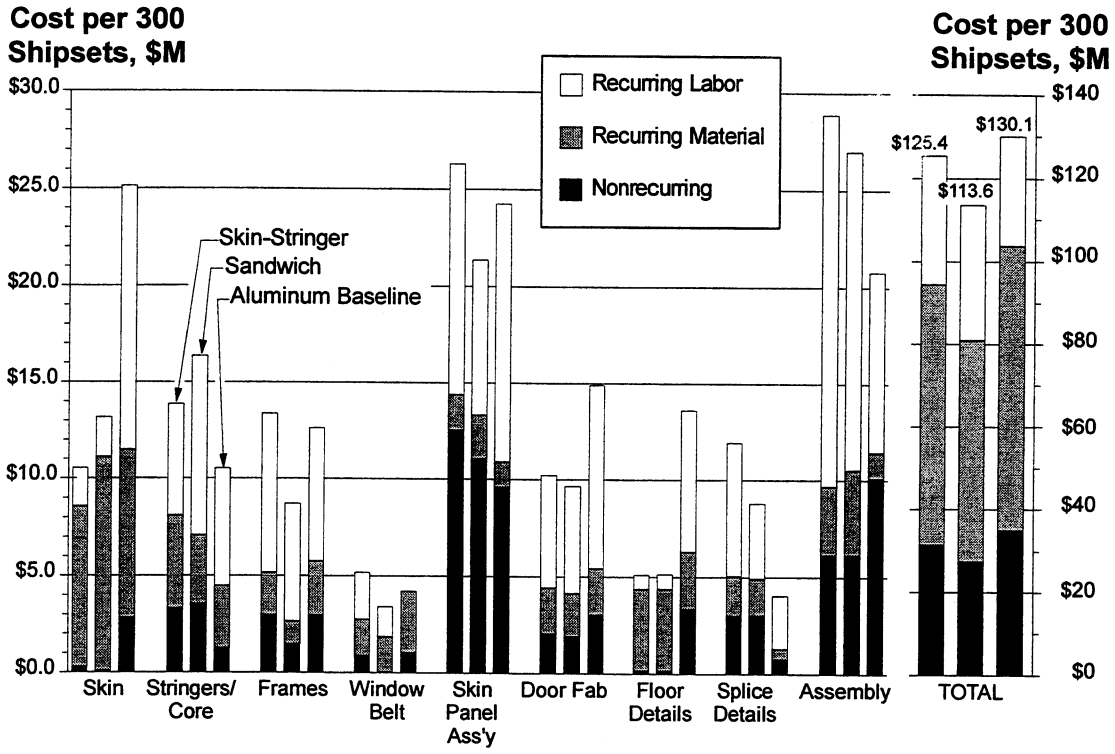

Figure 4-31. Cost Comparison of Side Panel Designs

The third design category was circumferential frame fabrication. The required fail-safe flange on the skin-stringer design accounts for the cost difference between the two composite concepts. Fabrication of the sandwich "J" frame required one braid cycle while the skin-stringer "F" frame required three braid cycles. In addition, for the "F" frame the tooling was more complicated and the material cost was higher due to higher weight and greater material scrap (a factor of 1.4 versus 1.2 for the "J" frame).

The window belt fabrication cost was similar for the three designs in spite of significant design differences. The skin-stringer design integrated the window frames, window belt skin doubler, and adjacent stringers into a single textile component. The sandwich design utilized aluminum frames isolated with fiberglass fabric from the graphite facesheets (the skin doubler was included in the skin cost).

The skin panel assembly represents a significant cost center for all three designs. For the composite skin-stringer design this cost included assembly and cobonding of the stringers to the fiber placed skin and installation of the mechanically fastened fuselage frames and stringer clips. Higher tooling, labor, and material costs associated with the fastened circumferential frames pushed the panel assembly cost higher than for the other designs. The sandwich panel assembly cost included assembly and cure/cobond of the facesheets, core blanket, and fuselage frames, and mechanically fastened assembly of the window frames. In addition, the composite designs assumed a certain level of shimming required on assembly not present in the baseline aluminum design. The baseline aluminum cost includes assembly of the three separate subpanels.

The sixth design category was the door cutout reinforcement structure fabrication. Both composite designs had very similar features and manufacturing processes and hence, virtually identical costs. Originally, the composite designs included titanium bathtub fittings but the cost associated with machining titanium was higher than the cost of aluminum fittings with isolation so the latter were substituted. The higher baseline aluminum cost reflects the high degree of tailoring in these elements. The next category, floor details, were of identical design for both composite concepts and hence there was no cost difference. Drape-formed floor beams were considered early in the design trades but were dropped in favor of pultruded beams which were less costly but slightly heavier. Similar designs were used for frame splice details in both composite designs. The skin-stringer design was more costly due to the metallic stringer splice fittings not present in the sandwich design. As for the door reinforcement details, titanium was originally considered for these but was replaced with isolated aluminum to reduce the cost.

The ninth design category was final assembly, including door structure assembly, door structure installation, side panel installation into the barrel section, and fuselage section join. Because the assembly procedures were similar for the composite designs, the tooling cost was nearly equivalent. The material cost was slightly higher for the sandwich design due to the use of a four row lap splice required by the full-depth splice configuration (the skin-stringer design featured a two row lap splice). This splice configuration also dictated the use of larger, more expensive fasteners. As for the skin panel assembly, the cost differential between the composite concepts and the baseline aluminum design is largely attributable to the assumption that assembly of the aluminum side panel was performed without shimming.

Summarizing the cost centers of the side panel global evaluation designs as a percentage of total cost for each concept results in the distribution shown in Figure 4-32. This highlights a number of interesting conclusions to be drawn from the cost assessment of the three side panel designs. First, the composite designs have similar percentages of total cost apportioned to tooling (nonrecurring) and detail part fabrication. Secondly, while the sandwich has a higher relative material cost (due primarily to the AS4/8552 facesheet material) a smaller portion of the cost is attributable to assembly as would be expected. Finally, a much larger percentage of the aluminum baseline cost results from detail part fabrication than for the composite concepts. Also, the assumption of a shimless design is reflected in the lower percentage of cost resulting from assembly.

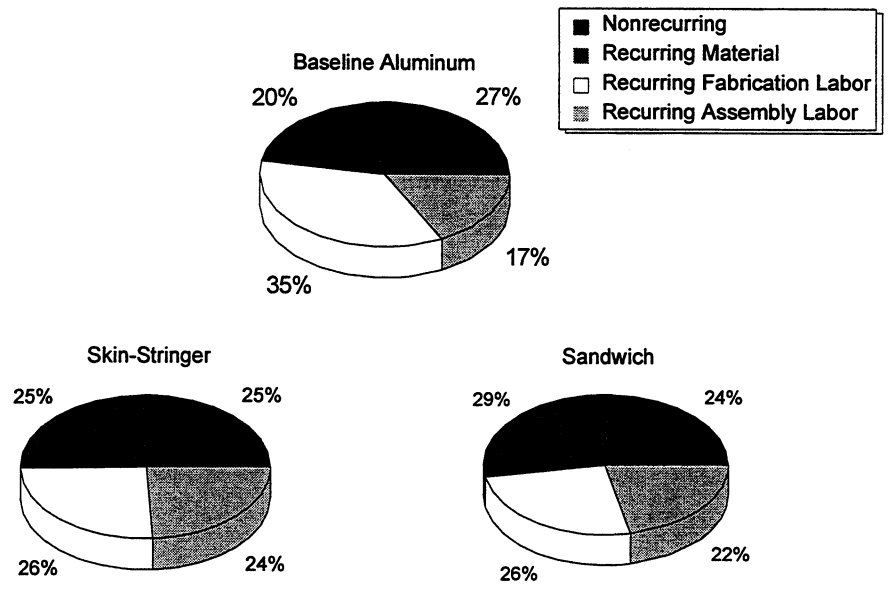

Figure 4-32. Cost Centers for the Side Panel Global Evaluation Designs

5.0 DESIGN COMPARISONS

The previous section described preliminary design development of two composite side panel concepts and estimates of the fabrication cost and structural weight for each. To fully understand the potential of each design, derivative designs were created by modifying and/or combining attractive elements of the original designs. The effect of each design variation on the total cost and weight was then estimated. An optimum design was thus developed within each family prior to down selecting to the single configuration to be further pursued during local optimization.

The following subsections describe the results of these trades, which were performed in two steps. The first step, global optimization, considered specific design detail changes to improve the design efficiency. Cost and weight estimates for the global optimization trades were performed to the same level of detail as for the original designs. The second step, local optimization potential, identified design and process improvements which the DBT felt could have a significant cost and weight impact. Estimates of the potential resulting improvements relied extensively upon past ATCAS design performance trade studies [Ref. 1, 2]. Unlike for global optimization, these relatively high risk (in terms of development required for implementation) design options were assessed using preliminary engineering analyses and cost projections.

5.1 Global Optimization

Following completion of the global evaluation cost and weight estimates described in Section 4, the DBT reviewed the data and identified several modifications intended to increase the efficiency of each design. The specific enhancements considered for the composite side panel designs are listed in Table 5-1. In this table, the percentage change from the global evaluation baseline designs is listed for each enhancement.

The Family B global optimization trades resulted in reductions of 3.7 percent cost and 2.4 percent weight from the global evaluation design. This positioned the skin-stringer design at a cost and weight savings of 7 percent and 25 percent, respectively, relative to the baseline aluminum. To reduce the cost and manufacturing risk of the Family B global evaluation design, the textile window belt element woven using powder-coated prepreg was replaced with braided/resin transfer molded (RTM) window frames as shown in Figure 5-1. The stringer cost was reduced (at a slight weight penalty) by switching from a drape-forming manufacturing process to pultrusion. The typical spacing was also increased to reduce the total number of stringers, further decreasing the stringer fabrication and circumferential splice assembly cost. And finally, the last trade reduced the panel weight by adopting a pocketed skin design with pads under the frames to preserve the required skin thickness for countersunk fasteners.

The Family D global optimization trades were more effective, particularly in regards to weight, achieving cost and weight reductions of 3.5 and 10.0 percent, respectively, from the global evaluation design. The braided/RTM window frames utilized on the B1 design were adopted to eliminate costs associated with galvanic isolation of the skin panel from the aluminum frames. A new, lighter (albeit more costly) core material was employed to reduce weight. Both cost and

weight reductions were possible through improvement of the core close-out details. And lastly, a more efficient cure cycle was adopted which reduced the amount of tooling and labor required to assemble the sandwich skin panel. These design improvements placed the Family D design at cost and weight reductions of 16 percent and 22 percent, respectively, compared to the baseline aluminum.

	Element	New Feature	Replacing . . .	Cost Change	Weight Change
Skin-Stringer	1) Window Belt	Lockheed 2D braided textile frame w/ AFP skin doubler	Lockheed 3D woven window belt	-0.5%	-1.1%
	2) Stringers	reduce number of different stringers - constant cross-section & layup - pultruded	11 unique stringer part numbers - drape-formed	-1.9%	+0.6%
	3) Stringers	9.1" spacing (eliminates one stringer)	8.4" spacing (lower side)	-1.1%	-0.9%
	4) Skin	discrete pads under frame attach flanges to provide required thickness for countersunk fasteners	overall min. skin gage based on countersink requirements (15 plies min.)	-0.2%	-1.0%
Sandwich	1) Window Frame	Lockheed 2D braided textile frame	aluminum frame w/ fiberglass isolation	-2.5%	-1.4%
	2) Core	4.5 pcf Korex	8.0 pcf HRP	+1.6%	-3.6%
	3) Core Close-outs: Window Belt Circ. Splice Door	 5° core ramp to solid laminate @ window belt 20° core ramp to solid laminate @ circumferential splice solid laminate under intercostals only	 injection molded Gr/Ep ring close-out solid laminate core close-out solid laminate between edge & aux. frames	-1.5%	-3.6%
	4) Skin Assembly	eliminate one ply of adhesive with 2-stage panel bond process - cocure OML facesheet & core splices - cocure IML facesheet to core/OML facesheet bond ass'y	panel bond process - cocure one ply of fabric to core assy	-1.1%	-1.4%

Table 5-1. Side Panel Global Optimization Trades

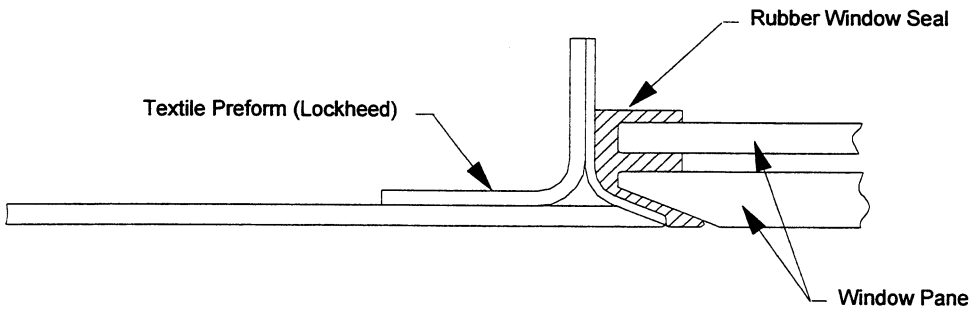

Figure 5-1. Braided RTM Individual Window Frame Element

Figure 5-2 summarizes the relative cost advantages of the three concepts compared in this trade study. The Family B design offers cost benefits over the baseline aluminum in the areas of skin, door reinforcement structure, and floor detail fabrication. In addition to those areas, the Family D design has lower projected costs for circumferential frame fabrication and panel subassembly. The composite designs were not able to achieve cost savings in the areas of stringer and core fabrication, driven by complex tooling, material costs, and a higher proportion of manual labor, and panel installation, due to the shim-free assembly assumption for the baseline aluminum panel.

Manufacturing Step	Cost Advantage			Comments
	Skin-Stringer	Sandwich	Baseline Aluminum	
Skin Fab	✓	✓		Lower composite skin weight and automated layup of single large panel.
Stringer/Core Fab			✓	Complex tooling & higher material cost for composite designs.
Frame Fab		✓		Sandwich concept affords simple J frame configuration.
Panel Subass'y		✓		Reduced labor and part count for sandwich concept.
Door Fab	✓	✓		Composite concepts utilize efficient fab processes. Further design refinement may erode cost savings.
Floor Details	✓	✓		Composite design features efficient pultrusion process.
Panel Install.			✓	Aluminum baseline reflects shim-free design and lower fastener cost.

Figure 5-2. Comparison of Cost Advantages Offered By Composite Designs

5.2 Local Optimization Potential

Building upon the results of the global optimization trades, the DBT identified potential design modifications to further improve the cost and weight efficiency of the composite concepts through review of dominant cost drivers. These changes were important in answering "what if?" questions regarding the influence of selected design details even though the changes were typically accompanied by increased risk. In addition, this exercise highlighted structures and manufacturing issues to be resolved during subsequent local optimization of the selected design concept. Table 5-2 lists, for each concept as a percentage change from the composite global evaluation design, the individual contribution of each trade considered.

For the Family B design, assembly was a major cost center. To assess the impact of assumptions made regarding the required level of shimming, estimates reflecting shimless assembly were generated. Based on these estimates it was found that such a design would reduce the Family B cost by nearly 14 percent. The second trade drew upon the ATCAS crown studies to determine the influence of widely spaced hat stringers in lieu of the global evaluation design's more closely spaced "J" stringers. This was found to have only a slight benefit, due in part to the stringer spacing constraints imposed by the overall side panel configuration (e.g., passenger door and floor locations) and the higher compression-shear loading in the lower side than was present in the crown. The cumulative result of these trades indicated that the Family B design had the

potential to be 23 percent less costly and 23 percent lower weight relative to the baseline aluminum.

	Element	New Feature	Replacing . . .	Cost Change	Weight Change
Skin-Stringer	1) Assembly	eliminate gap gaging and shim assumptions	all assemblies gaged and 15% of joint area requiring hard shims	-13.9%	-
	2) Stringers	hat stringers at ~13" spacing	J stringers @ ~8" spacing	-5.0%	+3.4%
Sandwich	1) Assembly	eliminate all gap gaging and shimming	all assemblies gaged and 15% of joint area requires hard shims	-9.1%	-
	2) Long. Splice	2 rows of fasteners	4 rows of fasteners	-1.6%	-0.5%
	3) Skins	eliminate one ply per facesheet (less conservative DT criteria)	DT criteria based on ATCAS database	-1.5%	-3.6%
	4) Frames	42" frame spacing	21" frame spacing	-13.4%	-1.5%
	5) Intercostals	eliminate door stop intercostals	16 door stop intercostals	-2.3%	-0.6%
	6) 360° Barrel	eliminate panel longitudinal splices	4 longitudinal splices	-4.9%	-2.7%

Table 5-2. Side Panel Local Optimization Potential Trades

Assembly was also a major cost center for the Family D design, so a similar trade was performed to assess the effect of eliminating all shimming on assembly. This provided significant cost savings, although not as substantial as for the Family B design due to the smaller amount of assembly in the sandwich design. To further reduce assembly cost and weight, the longitudinal splices were reconfigured from four fastener rows to two fastener rows. The effect of several additional trades were also considered, including (1) adopting a less conservative damage tolerance criteria which allowed one ply per facesheet to be eliminated, (2) increasing fuselage frame spacing, and (3) eliminating door stop intercostals, all of which took advantage of inherent characteristics of sandwich construction. Of these, increased frame spacing provided the most significant cost reduction (13.4 percent) while the less conservative damage tolerance offered the greatest weight savings (3.6 percent). Finally, to assess the influence of panel splices on the side panel cost and weight, a 360° sandwich barrel concept was estimated. This eliminated all details associated with skin panel longitudinal splices, reducing the cost and weight by an additional 4.9 percent and 2.7 percent, respectively. Summing the contribution from each of these trades indicated that the sandwich design potentially offered 40 percent cost savings and a 29 percent weight reduction relative to the baseline aluminum.

The results of both the global optimization and local optimization potential trades are depicted in Figure 5-3. This plot shows the total projected cost and weight savings for both composite designs considered during the side panel global evaluation effort relative to the baseline aluminum. Note that the ACT program goals reflect the additional benefit of resizing the overall aircraft to take advantage of lower structural weight; this benefit was not included in the Family B or Family D side panel cost and weight estimates.

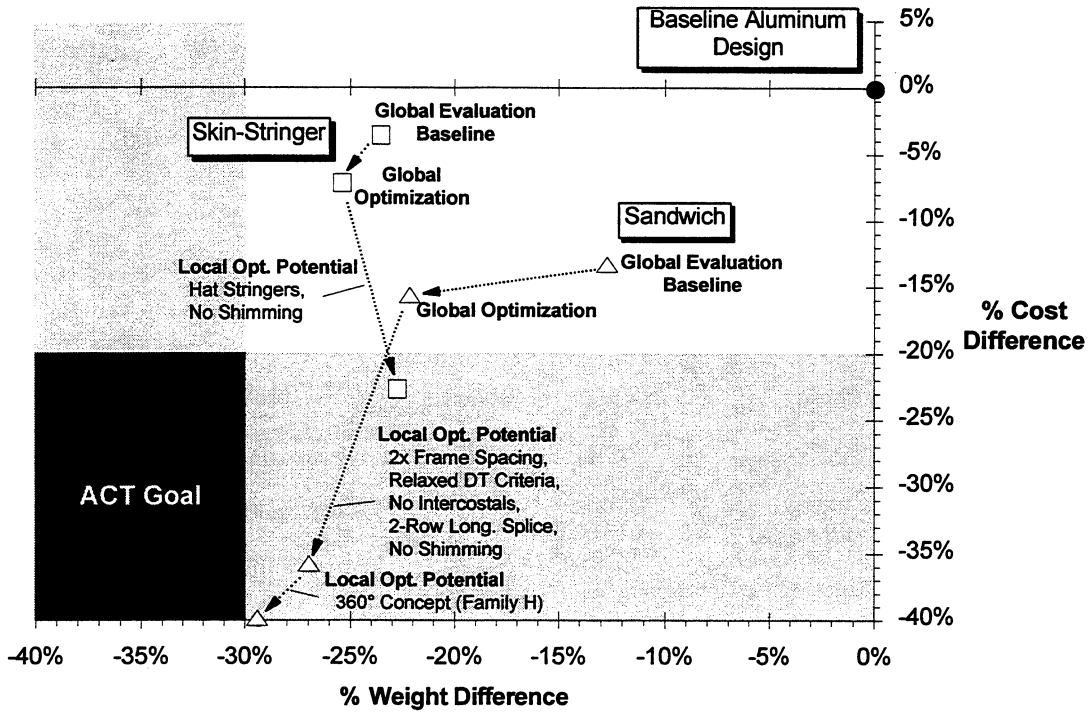

Figure 5-3. Results of Side Panel Global Optimization Trades

5.3 Design Trades Assessment

The trades studies described in the preceding section quantified the potential weight and cost savings the two composite side panel design configurations offer over the baseline aluminum. Due to the varying levels of risk introduced with each design variation, the viability of the composite design concepts was assessed from structural performance and assumed manufacturing process viewpoints. This assessment was performed in two steps: (1) determining the probability of attaining the full cost and weight savings potential of each design concept through the use of innovative design features and (2) quantifying the cost impact if assumptions regarding design details, structural performance, and manufacturing processes are not realized. These risk assessments also enabled prioritization of the manufacturing methods, materials, and design details to be pursued for maximum cost and weight benefit during subsequent side panel local design optimization.

5.3.1 Probability of Attaining Projected Cost/Weight Savings

As described in Sections 5.1 and 5.2, further cost and weight reductions may be realized through implementation of alternate manufacturing processes, materials, and innovative design details. A risk assessment was conducted to understand the probability of achieving the benefits resulting from these design changes. This evaluation (a) quantified risk the DBT attributed to achieving the cost/weight potential of each design and process improvement identified in the global optimization and local optimization potential trades, and (b) identified local optimization development priorities. Two probabilities, one based on meeting structural requirements and the other based on manufacturing feasibility, were projected for each design improvement. A

combined probability was then obtained by multiplying the two component probabilities as shown in Table 5-3. A probability ranking of 100 percent indicates that the DBT foresaw zero risk in meeting the manufacturing and structural performance criteria associated with that particular design feature (relative to the global evaluation baseline designs). The results of this assessment are plotted in Figure 5-4 relative to the baseline aluminum.

	Design Enhancement	Probability of Success		
		Manufacturing Feasibility	Structural Performance	Combined
Skin-Stringer	Braided RTM window frame	90%	90%	81%
	Pultruded stringers	60%	90%	54%
	Increased stringer spacing	100%	95%	95%
	Pocketed skin	100%	70%	70%
	Improved Assembly			
	Liquid shims on assembly only	80%	100%	80%
	No gap gaging or shimming on assembly	30%	100%	30%
	Hat stringers	80%	100%	80%
Sandwich	Braided RTM window frame	90%	90%	81%
	Korex honeycomb core	100%	80%	80%
	Improved core closeouts	60%	70%	42%
	Enhanced panel bond process	50%	90%	45%
	Improved Assembly			
	Liquid shims on assembly only	70%	100%	70%
	No gap gaging or shimming on assembly	30%	100%	30%
	Two-row longitudinal splice	90%	70%	63%
	Reduced minimum gage	100%	60%	60%
	Increased frame spacing	100%	90%	90%
	Eliminate door-stop intercostals	100%	30%	30%

Table 5-3. Probabilities of Success for Side Panel Design Improvements

For the composite skin-stringer design, the DBT attributed a relatively high probability of success to implementing a weight efficient "pocketed" skin, hat stringers, and part tolerances within ± 0.030 inch to eliminate the need for hard shims on assembly. These design improvements accounted for roughly half the cost reduction and virtually all the weight savings over the baseline design. Much lower probabilities of success were attributed to pultruded stringers and the ability to totally eliminate all forms of shimming on assembly. The primary concerns with these design features were concerns over cobonding pultruded stringers (due to potential for die lubricants to contaminate the resin system) and the ability to accurately control part dimensions to the high tolerances (± 0.006 inch) required to allow shimless assembly.

Similarly, for the composite sandwich design, the DBT attributed high probabilities of success to increased frame spacing, Korex honeycomb, and liquid shimmed assemblies. Lower probabilities were assigned to a simplified longitudinal splice, a lighter circumferential splice, improved sandwich close-outs, and a damage tolerance criteria less conservative than that used

for the global evaluation design. Considering only the design changes with probabilities greater than 50 percent still would place the sandwich design at a desirable cost/weight position relative to the skin-stringer design at a similar probability level. Those design features falling below 50 percent included elimination of door intercostals, no shimming on assembly, and improved window belt sandwich core close-outs. The low probability assigned to these design features was due to lack of detail generated during global evaluation and the challenge of controlling part dimensions to the high tolerances required for shimless assembly.

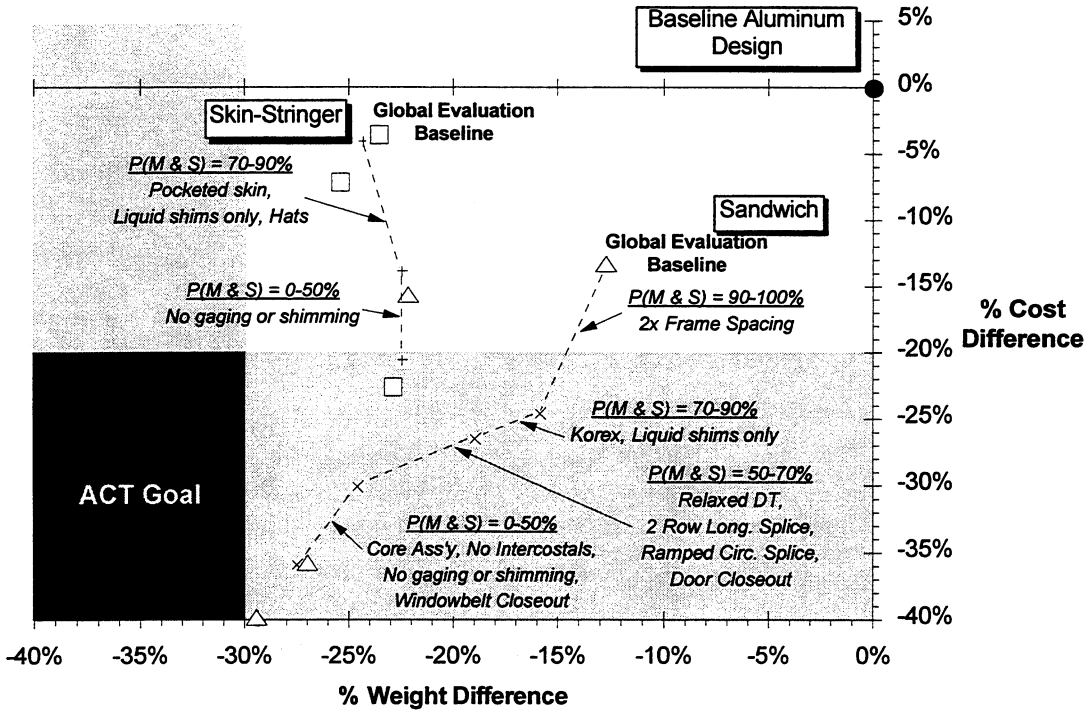

Figure 5-4. Probability Assessment of Achieving Cost/Weight Projections Identified During Local Optimization Potential

5.3.2 Cost Estimate Sensitivity Analysis

Balancing the outlook for further efficiency improvements of the composite designs was quantification of the sensitivity to assumptions upon which the cost estimates were predicated. Figure 5-5 shows the most significant cost impacts (relative to the aluminum baseline design) if projected trade study manufacturing and design assumptions cannot be met. (Recall that the baseline aluminum design assumes high tolerance automated manufacturing methods requiring no shimming on assembly.) This analysis confirmed that all design points identified in the study would be equally sensitive to the cost assumptions (i.e., all would increase by similar amounts). If material prices based on current market conditions were used in lieu of those based on projected future large-quantity production orders, the total side panel costs would increase by about 8 percent. If bonded or cocured barriers used to prevent galvanic corrosion of aluminum fittings were too costly or were deemed inadequate, reverting to machined titanium fittings would add 6 percent to the cost. Automated fiber placement rates remaining at developmental rates of 5 lbs/hr (instead of 25 lbs/hr as assumed in the estimates) increased the total cost by

3 percent. An increase in automated tow placement process material scrap rates from 10 percent to 50 percent would escalate the cost an additional 7 percent. The skin-stringer and sandwich designs would both see a cost increase of 1 percent for tailoring fuselage frames to provide greater weight savings in the face of varying loads around the circumference; decreased panel bond assembly efficiency would have a similar impact for both concepts. And finally, significant cost escalation would result if the overall factory efficiency of all processes was lower than expected, again effecting both concepts by a comparable magnitude as the skin-stringer and sandwich designs had similar total labor-hour estimates.

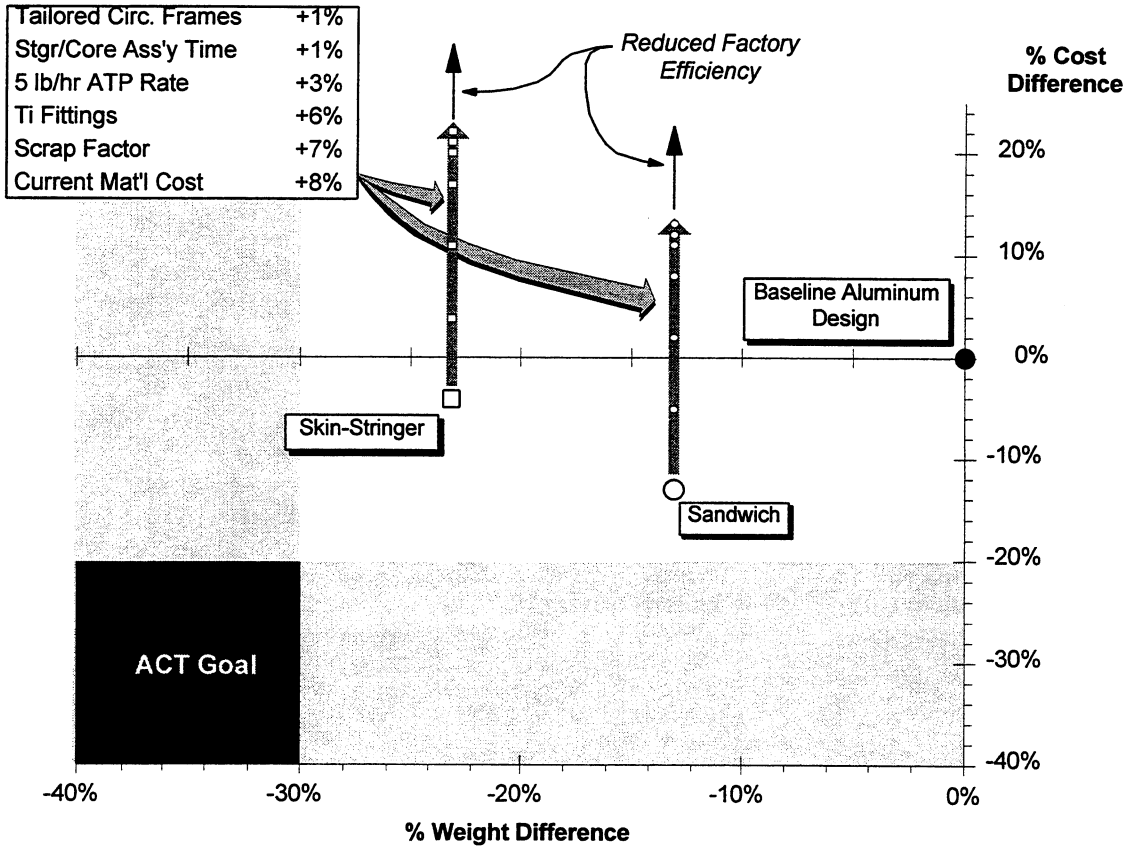

Figure 5-5. Effect on Total Cost if Assumptions Are Not Realized

5.3.3 Total Concept Cost/Weight Potential

With completion of this risk assessment, the DBT was able to quantify each concept's potential to meet the ACT program goals. This is depicted in Figure 5-6 with the region defined for each design representing the range of cost and weight savings identified during the side panel global evaluation trade study. This region includes both the potential related to concept optimization (variations in design detail and manufacturing processes) described in Sections 5.1 and 5.2 as well as savings erosion if key assumptions were not realized as discussed above.

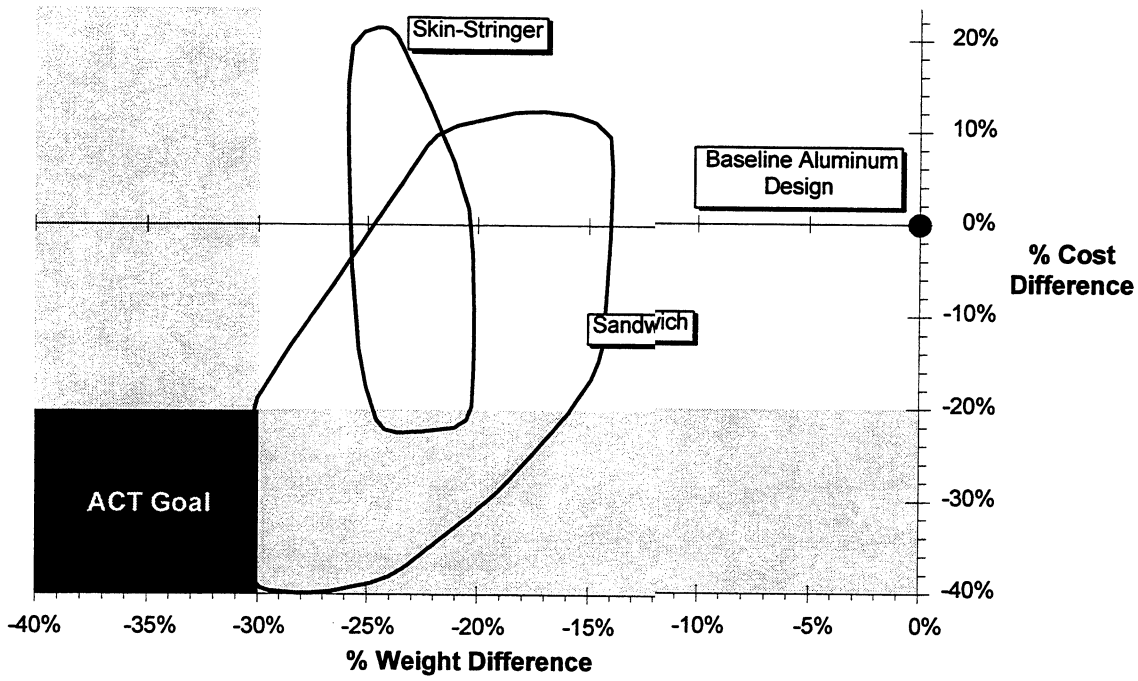

Figure 5-6. Cost & Weight Space Studied for Composite Skin-Stringer and Sandwich Concepts

5.4 Concept Selection Rationale

This section summarizes the process the side global DBT followed to select the preferred design concept. Section 5.5 prioritizes manufacturing and technical issues for the selected concept and presents future plans to mitigate these risks through remaining Phase B efforts.

The ATCAS program performs global evaluation to select a design family with cost and weight savings potential prior to the focused manufacturing and structures scaling efforts in subsequent stages of development. Identification of the manufacturing and technical risks for a selected concept are also important results from global studies because they help prioritize development of critical details.

5.4.1 Synopsis of Data Available for DBT Decision

Global evaluation has typically been a laborious DBT effort because cost and weight estimates are desired for concepts with representative structural design and manufacturing detail. Side global evaluation required significantly more time and resources than the crown or keel trade studies. Characteristics of the side panel leading to this increased effort include larger panel size, multiple critical load cases, and additional design details (e.g., passenger floor structure, and passenger door and window cutout reinforcements).

As shown in Figure 5-7, side global studies started in 1992 with DBT selection of key design features for the composite skin-stringer and sandwich concepts. Design sizing, engineering drawings, and manufacturing pre-plans required over a year to complete. Throughout this time frame, numerous team interactions matured each design based on insights for performance,

producibility, and cost and weight savings. As discussed in Sections 5.2 and 5.3, the trade study results were supplemented with evaluation of additional local optimization potential and manufacturing risk contributing to differences between the two concepts. Although some attempt was made to quantify the potential and risk of global crown and keel concepts (Refs. 1 and 2), a more rigorous study was performed for the side panel to evaluate the significance of higher costs for the composite skin-stringer design. Documentation of the ground rules, technical assumptions, major DBT decisions, and results occurred throughout side global evaluation, facilitating a complete review of the trade study prior to concept selection.

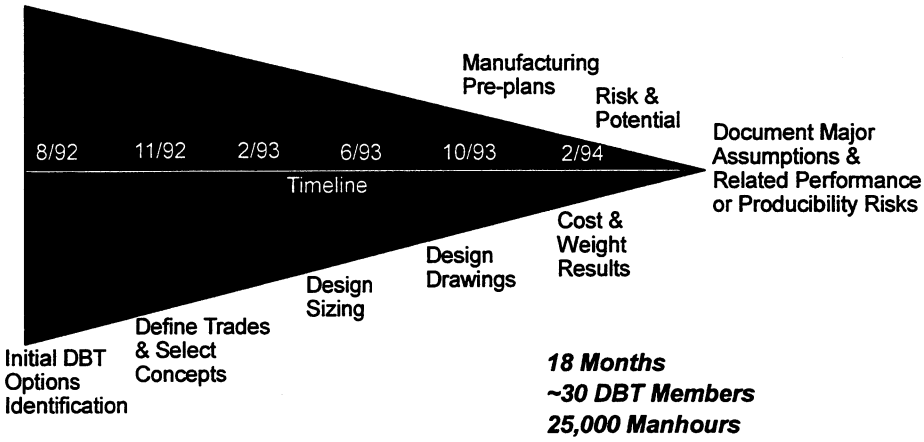

Figure 5-7. Side Global Evaluation Timeline

5.4.2 Team Concept Selection

Information contained within this contractor report represents a summary of the side global database. The data in this report was available at the time of concept selection in the form of a notebook for DBT review. Twenty-six DBT members met for two days to review the global evaluation data, discuss results, and select the side panel concept to be pursued during local optimization. These meetings included team members from Boeing (18), Lockheed (4), Northrop (3), and Sikorsky (1). The agenda for these meetings included presentations and discussions on:

- design and manufacturing details for each concept,
- cost estimating methods,
- baseline aluminum cost and weight,
- composite concept cost and weight results,
- potential and risk analyses,
- a method to quantitatively evaluate both design concepts,
- concept selection, and
- future plans.

The concept preference form shown in Figure 5-8 was completed by each DBT member attending the final side global DBT meetings to select the preferred concept and provide narrative rationale. Following review of technical issues and the side global trade study cost and weight results, each team member completed the selection form. The DBT selection process

resulted with eighteen members in favor of the sandwich concept and five proponents of the skin-stringer concept. A preference for the sandwich structure was primarily due to the trade study results indicating it had the greatest potential for meeting NASA ACT program cost and weight savings goals versus state-of-the-art aluminum structure.

Concept Preference Form

1/27/94

Side Quadrant Global Cost & Weight Trade Study

Team Member	
Name	
Affiliation	

Check One

☐ **Composite Skin/Stringer (Family B)**
Pursue Unique Local Optimization Potential: Yes No If Yes, Please Discuss Below

☐ **Composite Sandwich (Family D)**
Pursue Unique Local Optimization Potential: Yes No If Yes, Please Discuss Below

Comments Supporting Preferred Concept

	Influencing Factor	Brief Description
	Credibility of Cost Results	
	Value of Weight Savings	
	Cost Saving Potential	
	Weight Saving Potential	
	Other	

Figure 5-8. Team Member Input Form Used to Collect Preferred Concept and Supporting Rationale

In addition to selecting the preferred side panel concept, each DBT member was requested to comment on factors influencing the selection. These influencing factors included:

1) Credibility of the cost estimate results - were the cost estimates deemed accurate, and were the estimates for each concept performed to the same fidelity?
2) Value of weight savings, e.g., a high value for weight saved would essentially capture some of the life cycle cost savings that are important to the airlines,
3) Cost saving potential for each concept,
4) Weight saving potential for each concept, and
5) Any other factor(s) that influenced concept selection, i.e., manufacturing and performance risk, and the perceived durability and repairability of each concept.

Results from this influencing factor survey are presented in Table 5-4 showing the number of DBT responses for each factor. The results were sorted into three qualitative categories (high, average, and low) for each factor. Additional comments were summarized and have been included in Table 5-4. The DBT considered that the cost estimates were performed fairly and with reasonable accuracy, and typically allocated an average or high value for weight saved. The

consensus was that the sandwich design had greater cost saving potential and provided the best opportunity to reach the ACT cost-savings goal. The DBT also thought that the sandwich design had better weight saving potential, despite the fact that the global evaluation results (prior to optimization trades) indicated that the skin-stringer concept was more weight-efficient. The DBT, while selecting the sandwich design for continued development due to the better cost savings potential and the potential to meet the ACT goals, was concerned about performance, manufacturing, durability, and repair risks.

Influencing Factor	SKIN/STRINGER			SANDWICH			Typical DBT Comments
	High	Average	Low	High	Average	Low	
Cost Savings Credibility	0	15	2	0	15	2	Average cost credibility for both concepts
Weight Savings Value	4	9	0	5	9	0	Average to good weight value for both
Cost Savings Potential	1	2	4	16	2	0	Much better cost savings potential for sandwich
Weight Savings Potential	7	2	4	12	3	0	Better weight savings potential for sandwich
Performance Risk	0	0	0	3	1	0	More risk perceived for sandwich
Manufacturing Risk	0	0	0	2	2	2	More manufacturing risk for sandwich
Durability & Repair Risk	0	0	2	7	0	0	More repair and durability risk for sandwich
Potential for Reaching ACT Goals	5	0	1	12	1	3	ACT goal potential better for sandwich

Table 5-4. Side Panel Concept Selection - DBT Members Comments

The selection of a sandwich design superseded the original Family C side panel baseline concept (Ref. 1). Trade study results and team arguments justifying the selection of sandwich were compiled for technical review by Boeing and NASA management. Approval for more detailed studies to develop composite sandwich fuselage technology through the remainder of Phase B was obtained in these reviews. A prioritized list of sandwich manufacturing and structural performance issues to focus near-term ATCAS efforts were also identified during the course of these meetings. Section 5.5 discusses these issues as well as plans to demonstrate the suitability of composite sandwich structures for transport fuselage applications.

5.4.3 Team Evaluation of Global Cost & Weight Trades

In addition to selecting their preferred concept, most DBT members (20 of 26) filled out quantitative evaluation forms. These forms, similar to the samples shown in Figure 5-9, were used to quantify team member assessments of the side global cost and weight trades. Team members were requested to quantify the combined effects of concept potential and risks on achievable cost and weight. Trade study results compiled for the DBT review itemized cost and

weight differences due to specific design features and assumptions, allowing judgments on the risk and potential of specific changes. Note that each team member evaluated both skin-stringer and sandwich concepts, regardless of individual preference.

Side Quadrant Global Cost & Weight Trade Study
Concept Evaluation Form for: Composite Skin/Stringer (Family B)

1/27/94

Team Member	
Name	
Affiliation	

Evaluation of Global Study for Family B Composite Skin/Stringer Design Concept	1) Relative Cost (vs. Aluminum Baseline)	**0.958**
	2) Relative Cost from not Achieving Mfg. Advancements (0 to 0.244)	
	3) Projected Value of Weight Savings ($0 to $250 per lb of weight savings)	**$/lb**
	4) Weight Saved (Aluminum Baseline - Skin/Stringer)	**630 lb**
	5) Baseline Aluminum Average Cost per Shipset	**$433,643**
	6) Relative Value of Weight Saved (Line 3 x Line 4 ÷ Line 5)	
	7) Subtotal Assessment of Skin/Stringer Global Concept (Line 1 + Line 2 - Line 6)	
Evaluation of Global Optimization and Local Opt. Potential of Family B Composite Skin/Stringer Design Concept	8) Additional Weight Savings Potential (0 to 65 lb)	
	9) Additional Relative Cost Savings Potential (0 to 0.195)	
	10) Relative Value from Additional Weight Savings Potential (Line 3 x Line 8 ÷ Line 5)	
	11) Subtotal Assessment of Skin/Stringer Concept Potential (Line 9 + Line 10)	
	12) Total Assessment of Composite Skin/Stringer Concept (Line 7 - Line 11)	

Side Quadrant Global Cost & Weight Trade Study
Concept Evaluation Form for: Composite Sandwich (Family D)

1/27/94

Team Member	
Name	
Affiliation	

Evaluation of Global Study for Family D Composite Sandwich Design Concept	1) Relative Cost (vs. Aluminum Baseline)	**0.851**
	2) Relative Cost from not Achieving Mfg. Advancements (0 to 0.244)	
	3) Projected Value of Weight Savings ($0 to $250 per lb of weight savings)	**$/lb**
	4) Weight Saved (Aluminum Baseline - Sandwich)	**377 lb**
	5) Baseline Aluminum Average Cost per Shipset	**$433,643**
	6) Relative Value of Weight Saved (Line 3 x Line 4 ÷ Line 5)	
	7) Subtotal Assessment of Sandwich Global Concept (Line 1 + Line 2 - Line 6)	
Evaluation of Global Optimization and Local Opt. Potential of Family D Composite Sandwich Design Concept	8) Additional Weight Savings Potential (0 to 320 lb)	
	9) Additional Relative Cost Savings Potential (0 to 0.195)	
	10) Relative Value from Additional Weight Savings Potential (Line 3 x Line 8 ÷ Line 5)	
	11) Subtotal Assessment of Sandwich Concept Potential (Line 9 + Line 10)	
	12) Total Assessment of Composite Sandwich Concept (Line 7 - Line 11)	

Figure 5-9. Team Member Trade Study Quantitative Evaluation Forms

The quantitative forms for each concept calculated projected deviations from the global evaluation baseline and required input on:

i. additional cost resulting from not achieving manufacturing advancements (a risk assessment)
ii. cost savings resulting from implementation of global optimization and local optimization potential design details
iii. weight savings resulting from implementation of global optimization and local optimization potential design details
iv. value of weight savings (i.e., admissible cost increase for decreased weight in the allowable range of $0/lb to $250/lb).

Team members chose from weight savings identified in the global optimization and local optimization potential studies (i.e., values greater than or equal to the global evaluation baseline). Team members selected the achievable cost for each composite concept within a range from savings identified in optimization studies to possible cost increases quantified through risk assessment. Composite cost and weight inputs (items i, ii, and iii) were normalized as a percentage of the baseline aluminum. Composite weight saved versus the baseline aluminum was also converted to a relative cost through the parameter quantifying the value of weight savings (item iv from above). A total relative cost was calculated by summing terms for all four components.

Results for the Family B design are shown in Figure 5-10 (not including perceived value of weight savings), plotted as a function of the percent difference relative to the baseline aluminum. Averaged cost and weight savings projected by the team are listed with associated standard deviations. Figure 5-10 indicates team members believed that weight savings identified in optimization phases of the trade study were achievable. The standard deviation for weight results is indicative of the small additional weight savings identified in quantifying skin-stringer optimization potential. The assessment of cost showed team members believed that the potential and risk would tend to balance, yielding an achievable cost savings close to that of the global evaluation baseline. Note that the team assessment of the skin-stringer concept places it nearly 20 percent away from the ACT cost goals.

Results for the sandwich concept are shown in Figure 5-11 (not including perceived value of weight savings), again plotted relative to the aluminum baseline. This figure indicates team members believed that a considerable portion of the weight savings identified through optimization phases of the trade study were achievable. The team average weight savings represents a large shift in sandwich weight savings from the global evaluation baseline point towards that projected for Family B. The larger standard deviation for sandwich weight results is indicative of the additional weight savings identified in quantifying sandwich optimization potential.

As was the case for Family B, team members believed that cost potential and risk of the sandwich concept would tend to balance, yielding an achievable cost savings close to that of the global evaluation baseline. For the sandwich concept, team assessment of achievable cost savings was much closer to ACT program goals than for the Family B design. Although standard deviations for team member inputs on achievable cost savings for both concepts were

relatively large, a higher value was obtained for the Family D design. This is likely attributable to the greater risks DBT members associated with achieving additional cost savings of the sandwich concept.

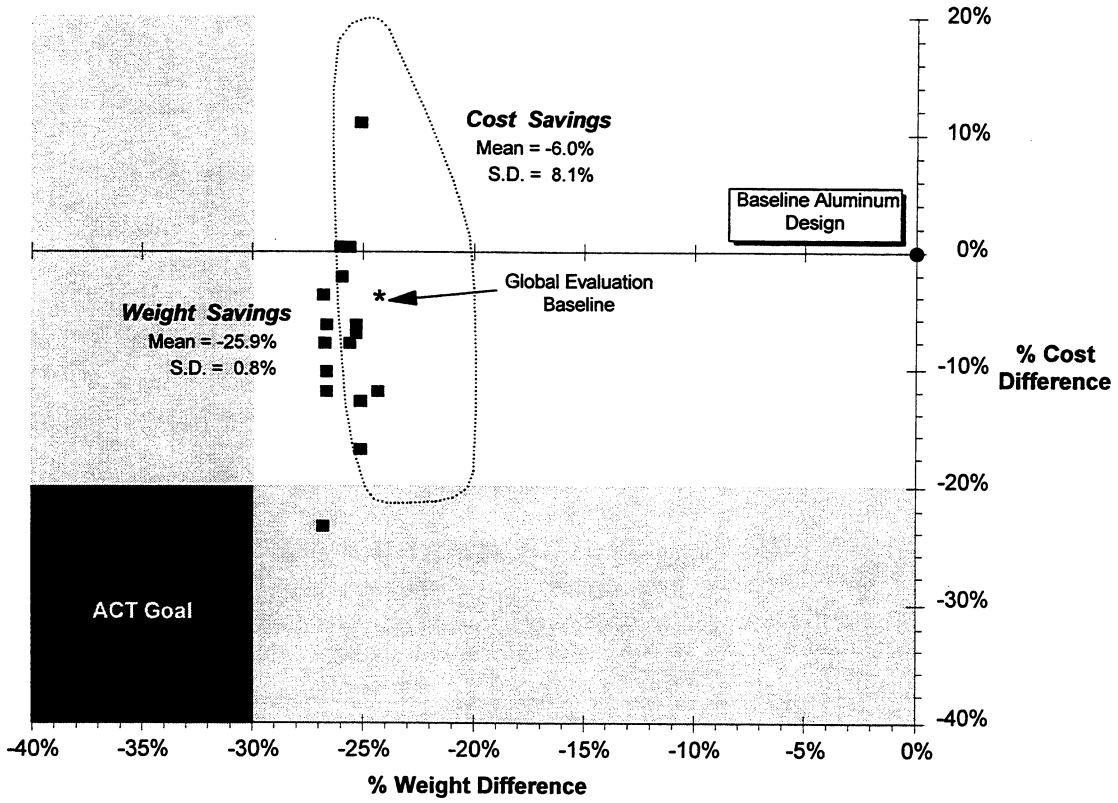

Figure 5-10. Composite Skin-Stringer Side Global DBT Cost & Weight Assessment

Team member inputs on the value of weight savings were combined with their cost and weight data to calculate total cost relative to the aluminum baseline. This combination of cost and weight data yields a single measure of team insights on the advantages of each composite concept versus the baseline aluminum. A smaller ratio indicates better value. Figure 5-12 shows the distribution of results for composite concepts. Averages and standard deviations for both concepts are also plotted to help visualize differences between the sandwich and skin-stringer designs. The average costs for the two concepts are within a standard deviation of each other. Again a slightly larger standard deviation suggests that the sandwich has greater risk associated with its additional potential.

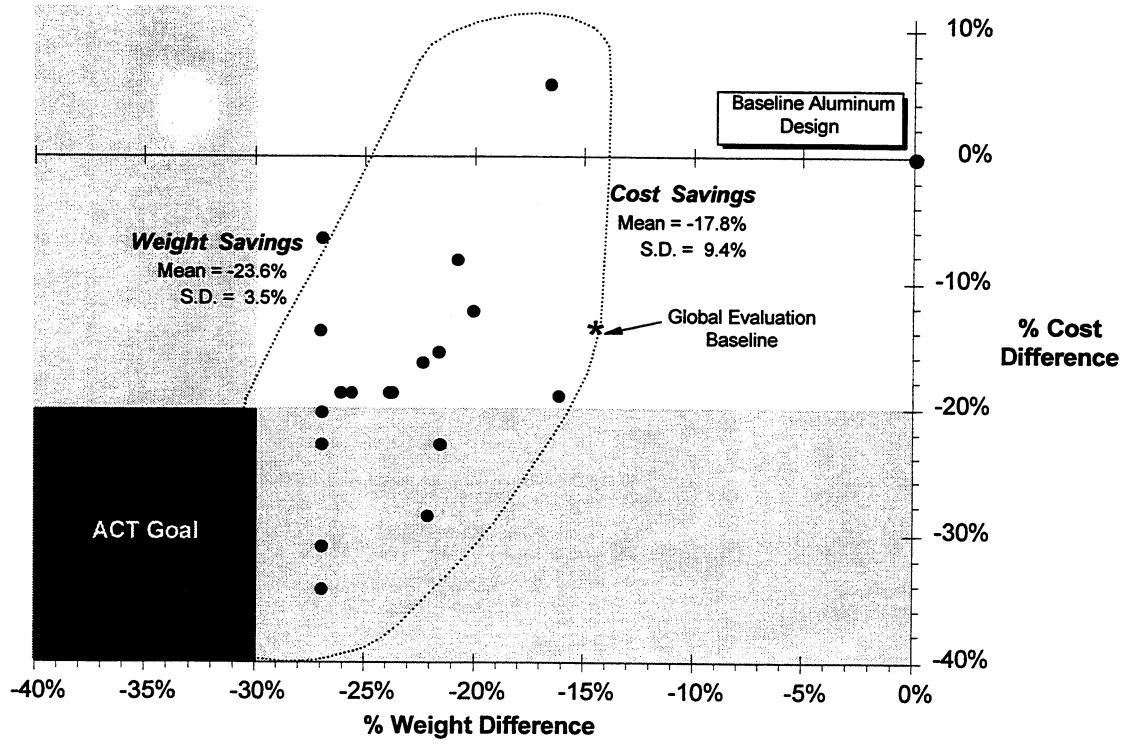

Figure 5-11. Composite Sandwich Side Global DBT Cost & Weight Assessment

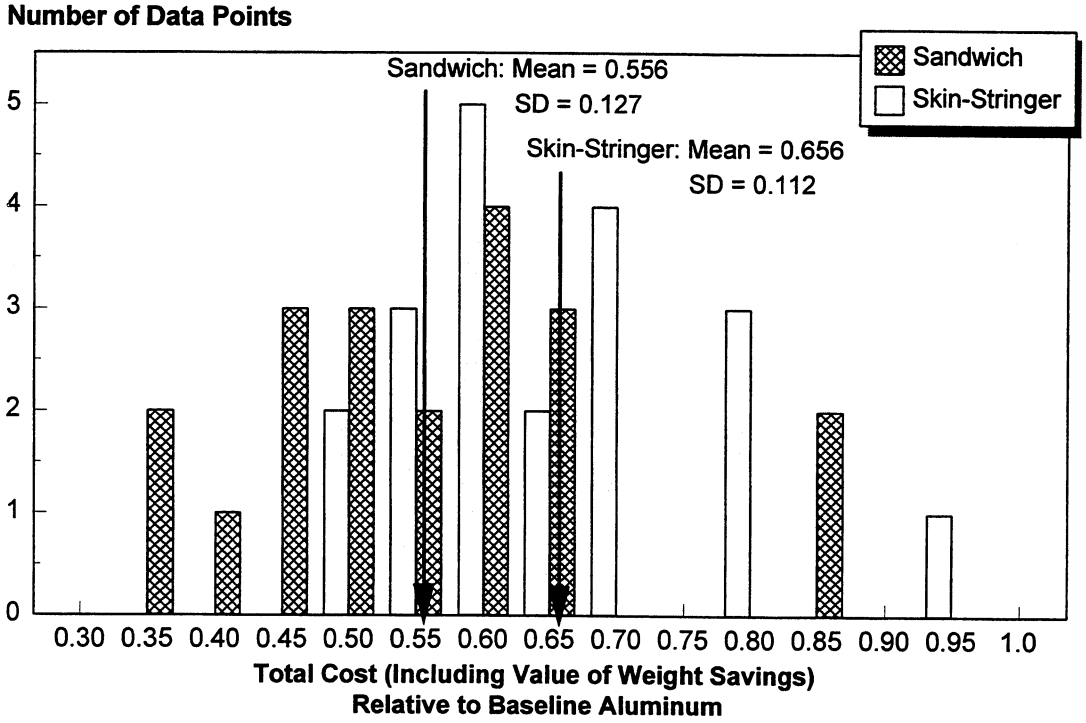

Figure 5-12. Distribution of DBT Data From Composite Skin-Stringer and Sandwich Evaluation Forms

5.5 Risk Reduction

The side panel global evaluation completes ATCAS Phase B trade studies to identify efficient composite fuselage structural configurations meeting ACT program goals. Design concepts, manufacturing processes, and related issues have been identified for fuselage crown, keel, and side panels in Section 46 of the study aircraft. As a result of these trade studies, sandwich configurations were identified to be most efficient for the keel (Ref. 2) and side panels. Through technical reviews of the side panel global evaluation trade study results with Boeing and NASA management, approval was obtained to continue pursuit of the cost savings potential of sandwich structure for transport fuselage under the ACT program. These reviews also confirmed the importance of weight savings which was deemed necessary to justify the additional risk of sandwich versus skin-stringer configurations.

Based on team member inputs and subsequent management reviews, a prioritized list of sandwich manufacturing and technical issues was developed to focus near-term ATCAS efforts for both the keel and side panel local optimization efforts. Figure 5-13 summarizes remaining Phase B efforts on technical risk reduction, local detailed design, and manufacturing scaleup for the selected side and keel sandwich concepts. The Phase B concepts and supporting databases will be re-evaluated at the start of ACT Phase C to facilitate design integration and scale-up for a full barrel manufacturing demonstration.

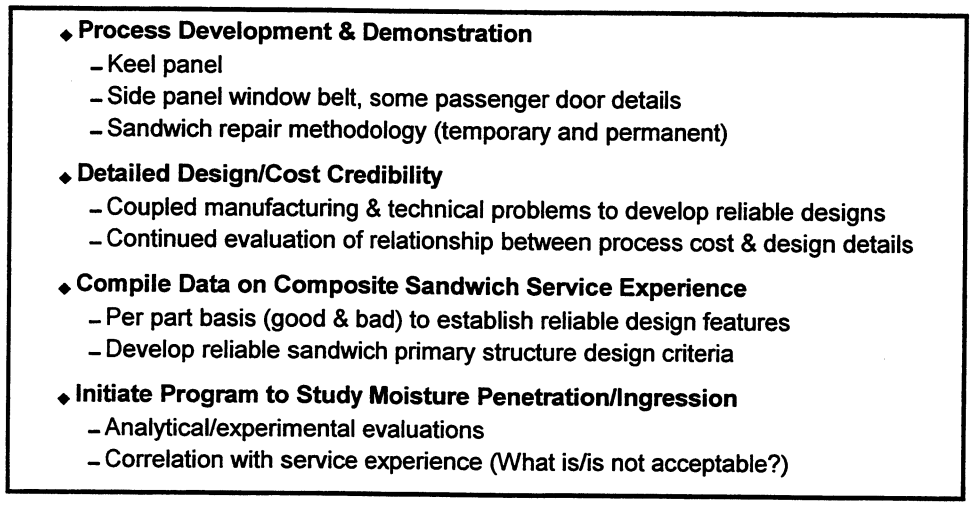

Figure 5-13. Sandwich Concept Development Efforts for the Remainder of Phase B

Each of the tasks listed in Figure 5-13 is directed towards demonstrating confidence in the use of sandwich transport fuselage structures. To further highlight the critical developments needed to achieve the desired level of confidence, the following technical issues were identified:

- Develop reliable & cost-effective sandwich keel & side panel design details
- Perform manufacturing scaleup & structural evaluation of sandwich keel (mid and forward keel panels) and side (window belt benchmark panels & door elements) hardware
- Develop repair methodologies suitable for airlines
- Perform liquid ingression analysis & test evaluation

- Begin development of cost-effective, light-weight sandwich panel close-outs
- Assess sandwich damage tolerance & bonded frame integrity

The remaining ATCAS Phase B side and keel panel studies will attempt to develop the database necessary to address each issue identified. The resolution approach and associated measures of success for each issue are defined in Figure 5-14.

Approach	Resolution
Keel & Side Panel Design • Compile data from past programs & in-service experiences for specific parts • Integrate results of process trials, building block tests, and COSTADE trades • Update keel, side panel design drawings based on local optimization results • Develop manufacturing cost relationships for selected design details	Documented cost & weight estimates for the optimized keel & side panel designs (incorporating results from all associated tasks) to quantify the sandwich cost/weight potential. Provide documented evidence that the selected design will be impervious to moisture/fluid ingression beyond immediate areas of damage.
Keel Manufacturing & Structural Scaleup • Develop cure cycle for thick laminate (forward keel) & sandwich (aft keel) • Develop AFP methodology and cure tooling for mid & forward keel details • Demonstrate manufacturing processes by fabricating curved, 7' x 10' mid and forward keel panels • Evaluate manufacturing tolerances, associated assembly issues, & costs • Perform detailed analysis to assess keel load redistribution	Sandwich cure cycle development, advanced tow placement, and tooling for assembly, will be demonstrated by successfully processing several 7' x 10' mid and forward keel panels. Completed forward keel panels will be tested to demonstrate load redistribution.
Side Manufacturing & Structural Scaleup • Develop AFP technology • Evaluate/develop window belt cure cycle & tooling • Demonstrate manufacturing methods at the scale of curved 7' x 10' window belt panels • Develop fabrication processes for selected door elements • Perform manufacturing tolerance measurements and analysis to assess mechanical assembly issues & costs • Perform detailed structural analysis to assess cutout performance	The development of a sandwich cure cycle, advanced tow placement process methodology, cure tooling concept and detailed structural analysis will be addressed by successful processing and testing of 7' x 10' demonstration panels.
Sandwich Panel Repair • Develop overall approach to repair design & processing suitable for a range of damage scenarios (including airline insights & approval) • Explore suitable nondestructive evaluation procedures for completed repairs • Develop analysis tools and documentation • Initiate process trials at an airline and structural testing (NASA)	Demonstrate fuselage sandwich repair for a compression keel panel with thick laminate facesheets (30 ply), perform structural tests to evaluate supporting analyses, and obtain airline feedback on approach/design/process.
Liquid Ingression Analysis & Test Evaluation • Literature review and in-service data collection • Define service environment • Identify & quantify ingression and internal propagation mechanisms • Determine effect of exposure on material properties • Evaluate response of cutout, splice design details by analysis & tests • Explore nondestructive evaluation procedures	Demonstrate the durability of keel and side panel materials and design details exposed to moisture and other fluids.
Cost-Effective, Light-Weight Sandwich Edge Close-outs • Develop design concepts for sandwich panel splice close-outs • Explore suitable nondestructive evaluation procedures • Begin process development of candidate designs • Perform measurements and analysis to evaluate the dimensional stability and splicing costs of candidate designs • Initiate tests and analysis to evaluate joint load transfer and bypass stress conditions for candidate designs	Demonstrate processibility and structural performance of selected sandwich panel close-out concepts with cost & weight savings potential for major structural splices.
Sandwich Damage Tolerance & Bonded Frame Integrity • Perform CAI analysis and tests for sandwich panel designs • Perform large notch (tension & compression) analysis and tests for sandwich panel designs • Bonded frame pull-off analysis & tests (pressure pillowing and stability) for sandwich panel designs • Explore suitable nondestructive evaluation procedures • Combine structural database with viable NDE methods to define requirements for the keel & side design details studied	Demonstrate analysis & inspection methods suitable for scaling building block tests to predict damaged fuselage structural performance (load redistribution & residual strength as a function of damage extent) and bonded frame integrity for selected design details. Success in this task will build confidence in defining suitable design criteria, inspection procedures, allowables methods, and maintenance documentation.

Figure 5-14. Approach and Resolution for Technical Issues to be Addressed Through Remainder of ATCAS Program (ACT Phase B)

6.0 CONCLUSIONS

Preliminary design of two fuselage side panel design concepts was performed. The designs differed significantly in material type, structural configuration, and manufacturing processes in order to distinguish a range of cost and weight variation for individual design features. The first design, designated Design B1, featured drape-formed J-section stringers cobonded to an automated fiber placed skin with mechanically fastened textile/RTM circumferential frames. The second design, designated Design D1, was a sandwich configuration featuring automated fiber placed facesheets, honeycomb core, and textile/RTM cobonded circumferential frames. Both designs were sized considering critical load cases, damage tolerance, attachment details, and fabrication processes. Engineering drawings defining the designs were generated, from which component weights were calculated. Detailed manufacturing and assembly preplans were also developed. Recurring and nonrecurring (excluding capital equipment) costs were estimated directly from the data contained in the preplans and engineering drawings. These estimates were generated in accordance with specific groundrules established for the ACT program. Based on the cost and weight estimates, the designs were refined to improve their efficiency. Finally, an assessment of further potential improvements which might be realized through additional development was performed.

Key design drivers were identified for both composite designs. Panel stability dictated the lower side panel configuration due to high shear loading at the forward end and combined shear-compression loading in the middle and aft regions. Damage tolerance was a concern over the majority of the middle and upper side acreage areas. In regions adjacent to door and window cutouts, ultimate strength was the critical factor. Panel edges were designed by splice requirements of bearing/bypass and minimum thickness for countersunk fasteners.

Weight results for the two composite global evaluation designs revealed that the B1 design offered the greatest savings, 23 percent, while the D1 design presented savings of 13 percent as compared with the baseline aluminum design. The skins were the major contributor, accounting for approximately 40 percent of the total weight of each design, as well as providing the majority of the weight savings over the baseline aluminum design. The circumferential frames and door structure also contributed to the lower weight of the composite designs as these elements were sized by ultimate strength whereas for the baseline aluminum design they were typically driven by fatigue considerations. All other elements were on par with the baseline aluminum design.

Cost estimates for the two composite designs revealed that nonrecurring costs comprise approximately 25 percent of the total with the remaining fraction fairly evenly distributed between recurring material, fabrication labor, and assembly labor. In terms of design elements, skin panel assembly and final panel assembly/installation comprised approximately 43 percent of the total cost of the composite designs. This is due to the large size of the ATCAS side panel and the numerous complex subassemblies (i.e., window frames, door structure, and fuselage frames). Virtually all of the cost savings achieved by the composite designs was attributable to skin fabrication with the composite designs benefiting from the highly automated fiber placement process. Comparative results indicate the D1 design offers the greatest cost savings (13 percent) over the baseline aluminum while the B1 design showed a 4 percent savings.

Global optimization of the composite design concepts was performed by trading specific design details to gain performance advantages or reduce costs. Two examples of this are the use of pultruded stringers in lieu of drape-forming to reduce the B1 fabrication cost and replacing the 8.0-3/16 HRP core with DuPont's 4.5-1/8 Korex on the D1 design to reduce weight. As a result of this exercise, cost savings (relative to the baseline aluminum) for the B1 design increased to 7 percent while the D1 design's cost savings increased to 16 percent. Weight savings for the B1 design improved slightly to 25 percent while the globally optimized D1 design achieved 22 percent weight savings.

As the final step in the side panel global evaluation, the potential to further improve the composite designs during local optimization was assessed. Validation of these design modifications was acknowledged to require significant development but these trades were important in answering "what if?" questions regarding the influence of selected design details. For the B1 design, hat instead of J-section stringers and lower part deformation leading to reduced shimming requirements on assembly were considered. The D1 design was shown to benefit from less conservative damage tolerance criteria and increased circumferential frame spacing as well as reduced shimming requirements. The results of this final assessment placed the potential cost savings of the B1 design at 23 percent and the D1 design at 40 percent relative to the baseline aluminum. Similarly, potential weight savings were projected at 23 percent for the B1 design and 29 percent for the D1 design.

Based on the cost and weight results and assessment of the risks associated with each design, the D1 design was selected for continued development during side panel local optimization. The risks considered in making this selection included those associated with manufacturing process development, performance characteristics, and the ability to demonstrate the chosen concept within the confines of available program resources. The key to selection of the D1 design was the greater potential it offered to meet the ACT program goals. An additional outcome of the side panel global evaluation process was identification of critical design issues for each design. These issues will focus the D1 local optimization efforts such that the major design details will be quantified in terms of structural performance and manufacturing cost.

During local optimization, the next and final stage of side panel development, the sandwich design will be further refined. This will include results of manufacturing scaleup activities (directed primarily towards the window belt area) and quantification of the cost and weight potentials identified during the global evaluation phase. More extensive design tailoring will be pursued for the major side panel components; the NASA/Boeing Cost Optimization Software for Transport Aircraft Design Evaluation (COSTADE) will be utilized to support optimization of design variables such as laminate and core thicknesses, ply orientations, and stacking sequences. Significant resources will also be directed towards development and demonstration of side panel fabrication processes, with particular emphasis on the window belt region. Skin and core materials selected during global evaluation will be characterized to determine structural performance and processing parameters. In addition, the environmental durability and structural integrity of key design details such as sandwich panel closeouts and bonded elements will be evaluated. Study of all these issues will provide the confidence and database necessary to carry the side panel sandwich design into full scale development, to be performed during Phase C of the ACT program.

7.0 REFERENCES

1. Ilcewicz, L.B., et al, "Application of a Design-Build Team Approach to Low Cost and Weight Composite Fuselage Structure," NASA CR-4418, December 1991.

2. Flynn, B.W., et al, "Global Cost and Weight Evaluation of Fuselage Keel Design Concepts," NASA CR-4541, December 1993.

3. Walker, T.H., et al, "Tension Fracture of Laminates for Transport Fuselage Part I: Material Screening," Second NASA Advanced Technology Conference, NASA CP 3154, pp. 197-238, 1991.

4. Chu, R.L., et al, "Development of Advanced Textile Structures Using Powder Epoxy Towpreg Material," Tenth DoD/NASA/FAA Conference on Fibrous Composites in Structural Design, NAWCADWAR-94096-60, Volume II, Session VI, pp. VI-21 - VI-38, (1994).

5. Adams, L.T., et al, "Development, Testing and Evaluation of Fuselage Frames Manufactured From Braided Preforms," Tenth DoD/NASA/FAA Conference on Fibrous Composites in Structural Design, NAWCADWAR-94096-60, Volume II, Session VI, pp. VI-39 - VI-52, (1994).

6. Ilcewicz, L.B. and T.H. Walker, "Advanced Technology Composite Aircraft Structures Monthly Technical Progress Report, Number 44," January 1993.

7. Fedro, M.J., and K. Willden, "Characterization and Manufacture of Braided Composites for Large Commercial Aircraft Structures," Ninth DoD/NASA/FAA Conference on Fibrous Composites in Structural Design, DOT/FAA/CT-92/25, pp.935-978, (1992).

8. Walker, T.H., L.B. Ilcewicz, D.R. Polland, and C.C. Poe, Jr., "Tension Fracture of Laminates for Transport Fuselage - Part II: Large Notches," Third NASA Advanced Technology Conference, NASA CP 3178, pp.727-758, (1992).

9. Walker, T.H., et al, "Tension Fracture of Laminates for Transport Fuselage - Part III: Structural Configurations," Fourth NASA/DoD Advanced Technology Conference, NASA CP-3229 Vol. 1 Part 1, pp. 243-263, (1993).

10. Chang, S.G. and J.W. Mar, "The Catastrophic Failure of Pressurized Graphite/Epoxy Cylinders Initiated by Slits at Various Angles," 25th AIAA/ASME/ASCE/AHS Structures, Structural Dynamics and Materials Conference, 1984, pp. 123-129.

11. Folias, E.S., "Asymptotic Approximation to Crack Problems in Shells," Mechanics of Fracture, Vol. 3, Leyden, Noordhof International, 1977, pp. 117-160.

12. Jones, R.M., "Buckling of Circular, Cylindrical Shells with Multiple Orthotropic Layers and Eccentric Stiffeners," AIAA Journal, Vol. 6, 1968, pp. 2301-2305.

13. Bruhn, E.F., **Analysis and Design of Flight Vehicle Structures**, Jacobs Publishing Co., Carmel, IN, 1973.

14. Mabson, G.E., B.W. Flynn, L.B Ilcewicz, and D.L. Graesser, "The Use of COSTADE in Developing Composite Commercial Aircraft Fuselage Structures," Proceedings of the 35th AIAA/ASME/ASCE/AHS/ASC SDM Conference, Hilton Head, SC, 1994.

15. Timoshenko, S.P. and J.M. Gere, **Theory of Elastic Stability**, McGraw-Hill, New York, 1961.

16. Whitney, J.M., **Structural Analysis of Laminated Anisotropic Plates**, Technomic, Lancaster, PA, 1987.

17. Deo, R.B., H.P. Kan and N.M. Bhatia, **Design Development and Durability Validation of Postbuckled Composite and Metal Panels; Volume III Analysis and Test Results,** Air Force Technical Report WRDC-TR-89-3030, November 1989.

18. Deo, R.B., B.L. Agarwal, and E. Madenci, **Design Methodology and Life Analysis of Postbuckled Metal and Composite Panels, Final Report**, Air Force Technical Report AFWAL-TR-85-3096, December 1985.

19. Grande, D.H., B.W. Flynn, E.F. Dost, L.B. Ilcewicz, and W.B. Avery, "Studies on Toughened Material Forms for Composite Fuselage Keel Applications," in the Proceedings of the Sixth Technical Conference of the American Society for Composites, 1991.

APPENDIX A

DESIGN FAMILIES

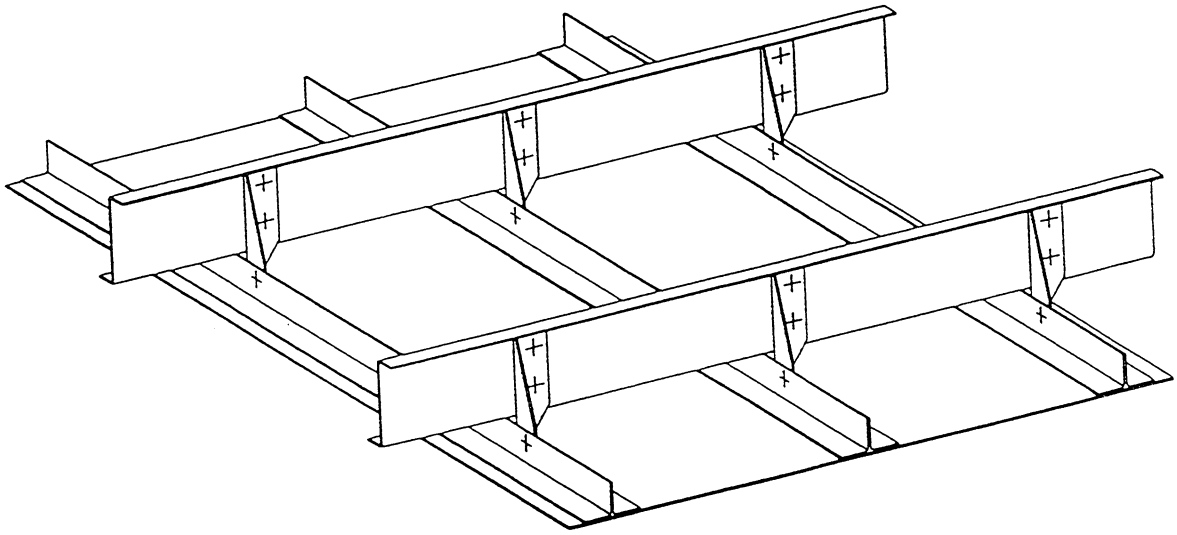

Family A: Skin-Stringer-Frame (Mechanically Fastened Stringers and Frames)

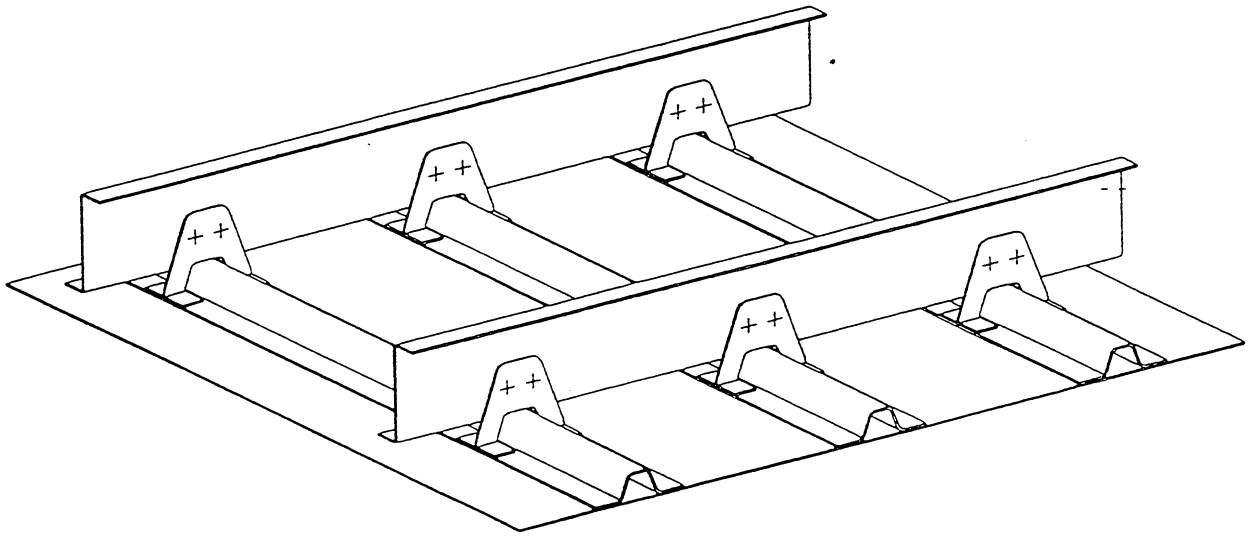

Family B: Skin-Stringer-Frame (Bonded Stringers)

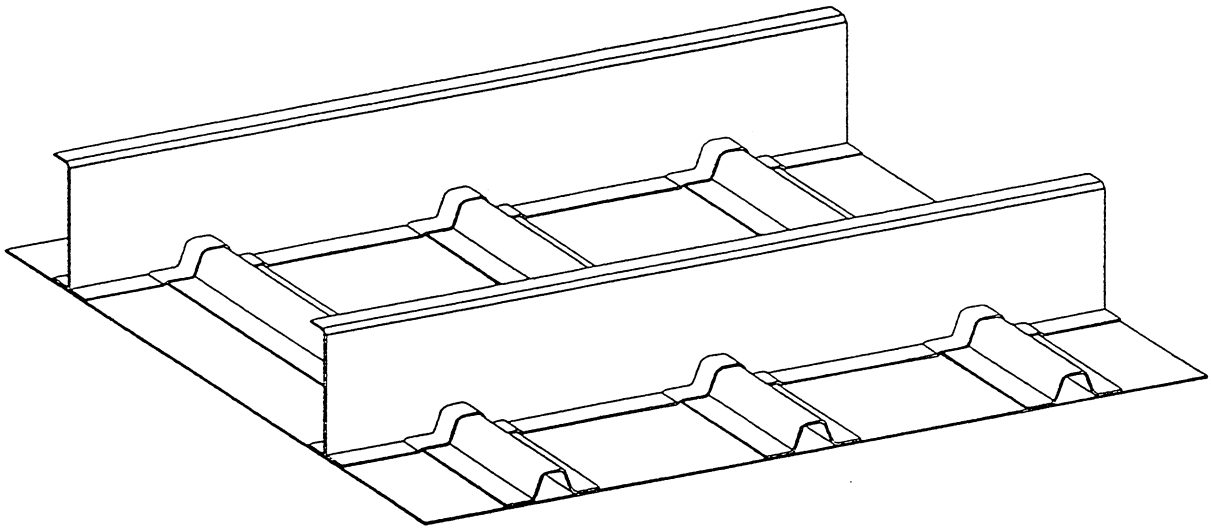

Family C: Skin-Stringer-Frame (Bonded Stringers and Frames)

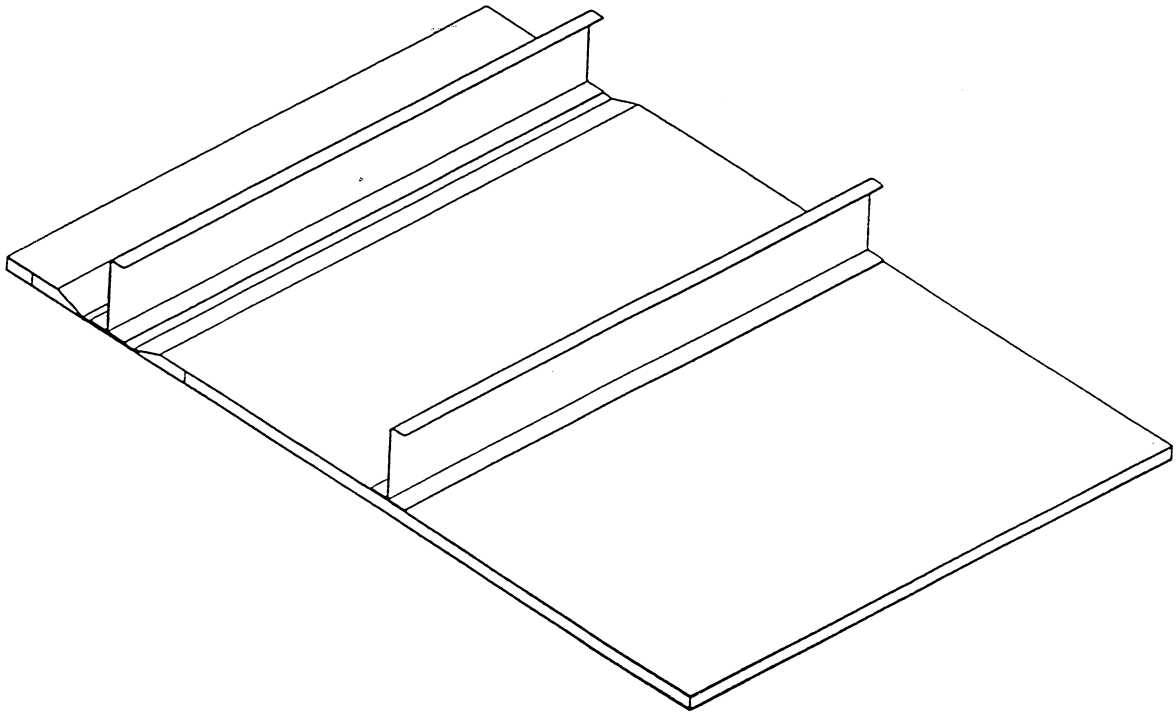

Family D: Sandwich

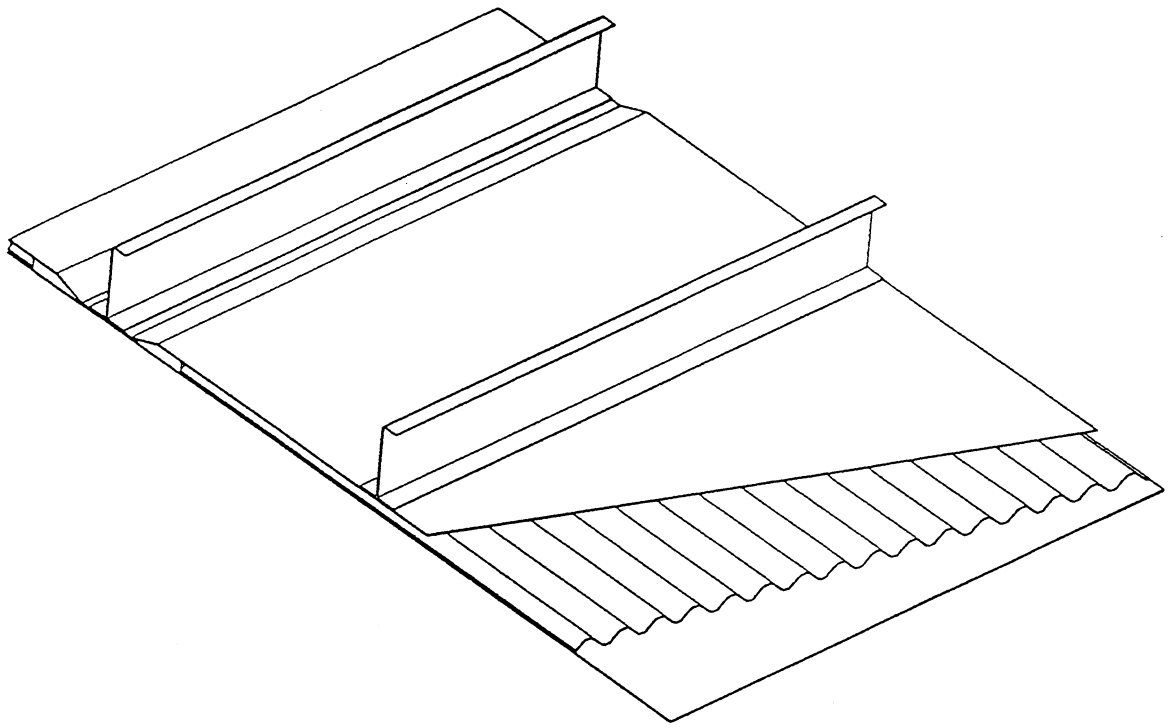

Family E: Corrugated

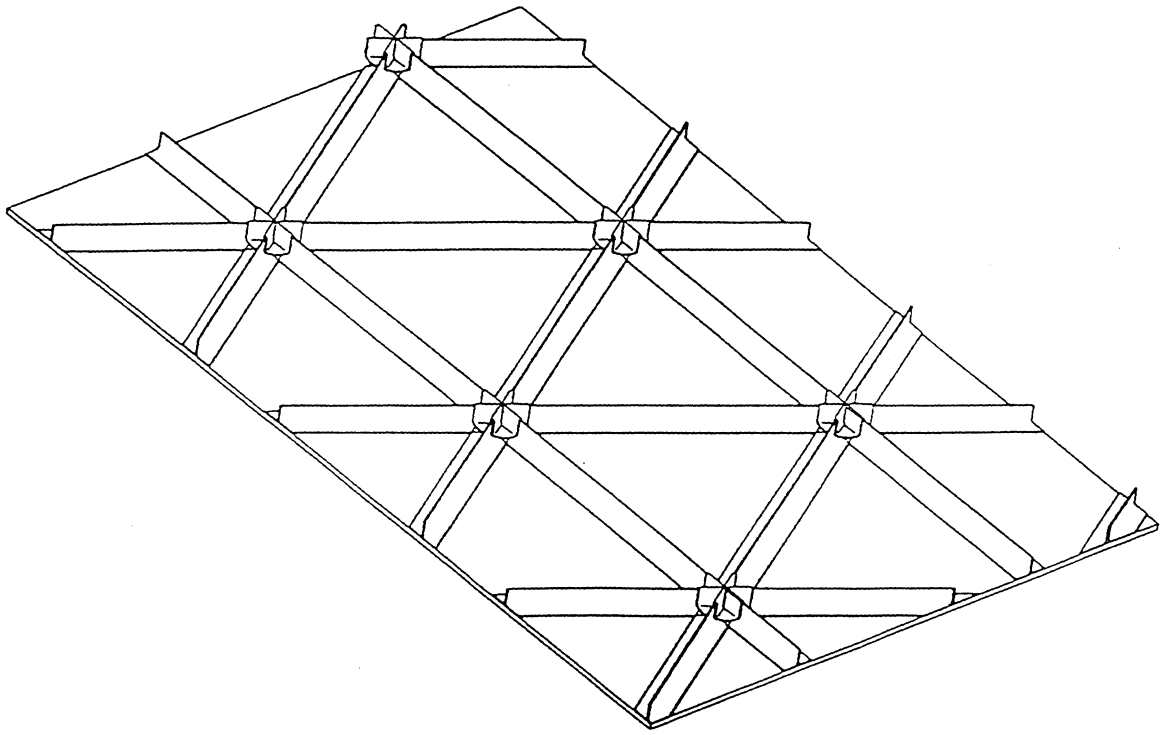

Family F: Geodesic

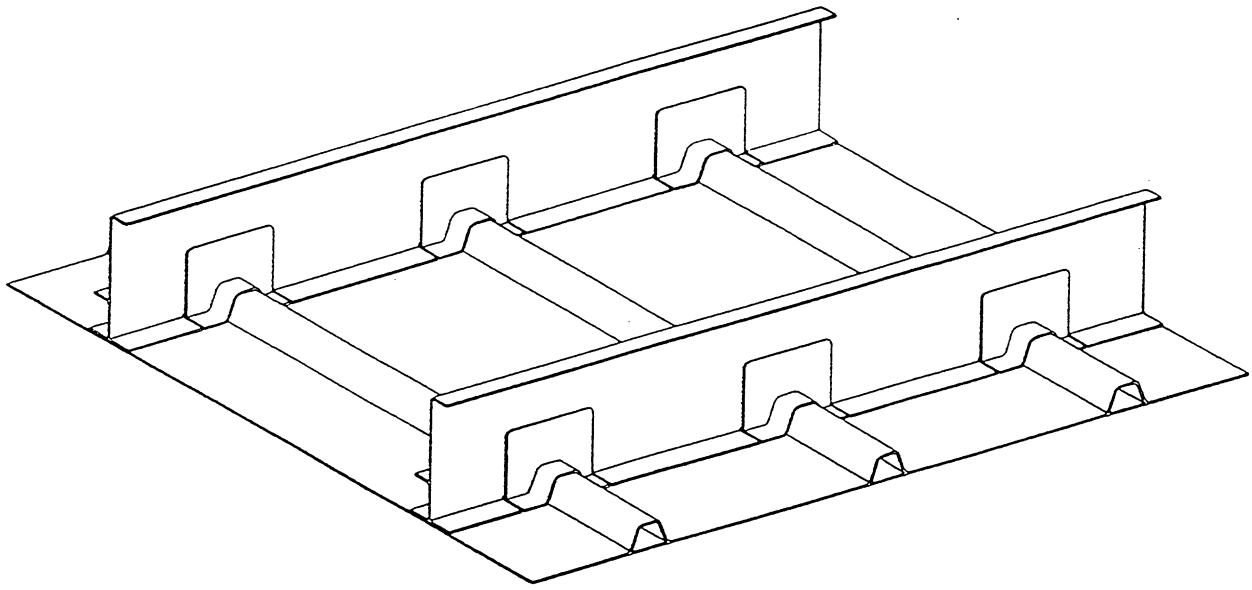

Family G: Integrally Stiffened Skins

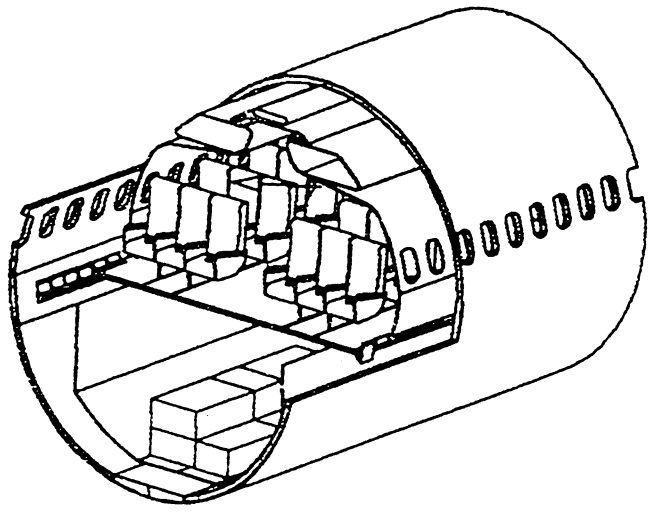

Family H: Continuous 360°

APPENDIX B

FAMILY B DESIGN DRAWINGS

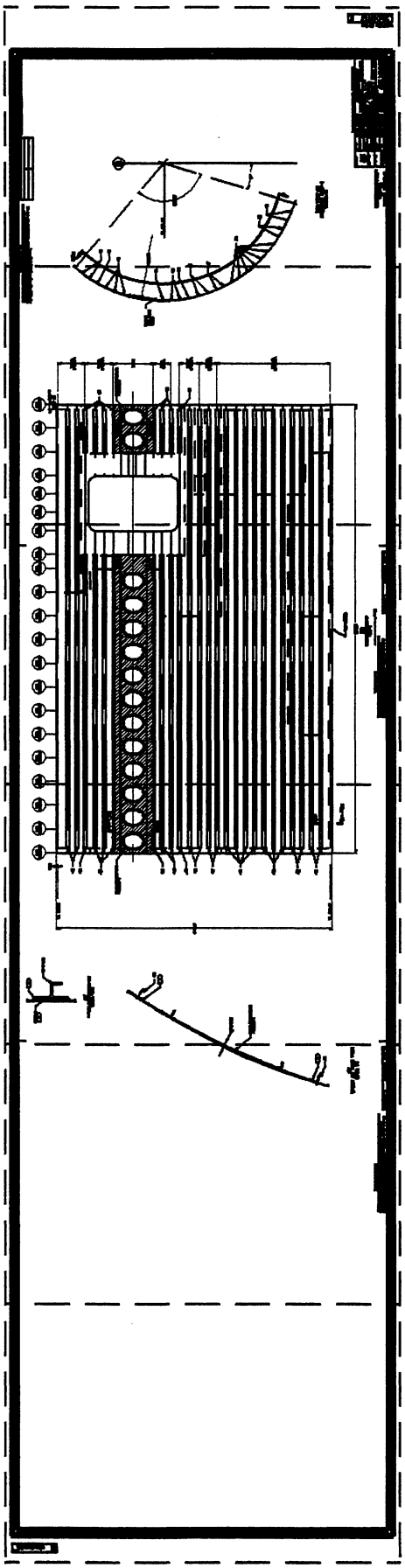
B-6
B-5
B-4
B-3
B-2
B-1

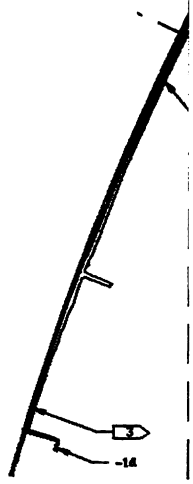

C7
SHOWN AS TRUE VIEW
SCALE: 1/2

BOEING PROPRIETARY
THE INFORMATION CONTAINED HEREIN IS PROPRIETARY TO THE BOEING COMPANY AND SHALL NOT BE REPRODUCED OR DISCLOSED IN WHOLE OR IN PART OR USED FOR ANY PURPOSE EXCEPT WHEN SUCH USER POSSESSES DIRECT WRITTEN AUTHORIZATION FROM THE BOEING COMPANY.

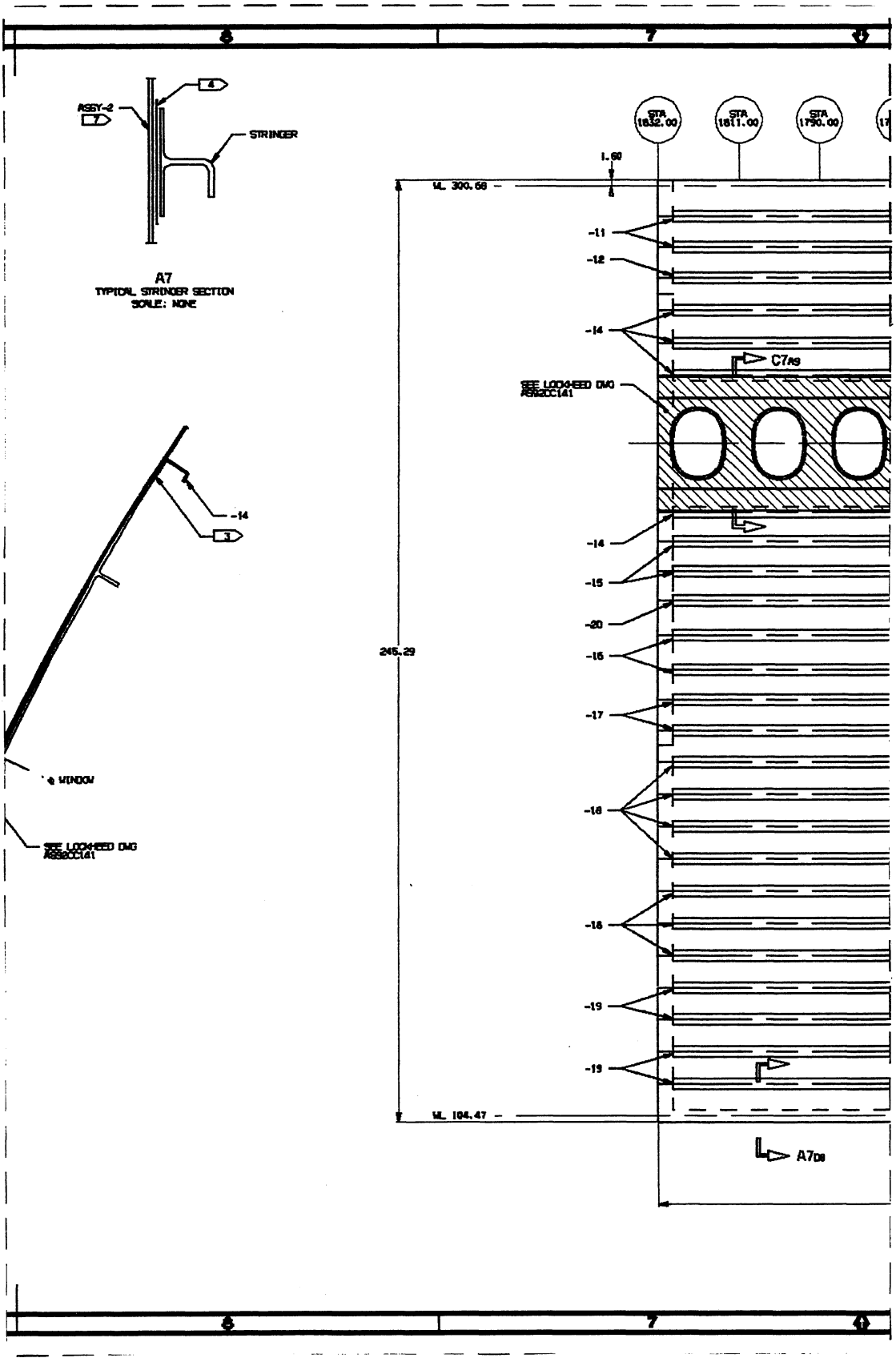
ASSY-2
STRINGER
A7
TYPICAL STRINGER SECTION
SCALE: NONE
STA 1832.00
STA 1811.00
STA 1790.00
WL 300.68
WL 184.47
246.29
-11
-12
-14
C7A9
SEE LOCKHEED DWG
-14
-15
-20
-16
-17
-18
-18
-19
-19
A7D8
-14
WINDOW
SEE LOCKHEED DWG

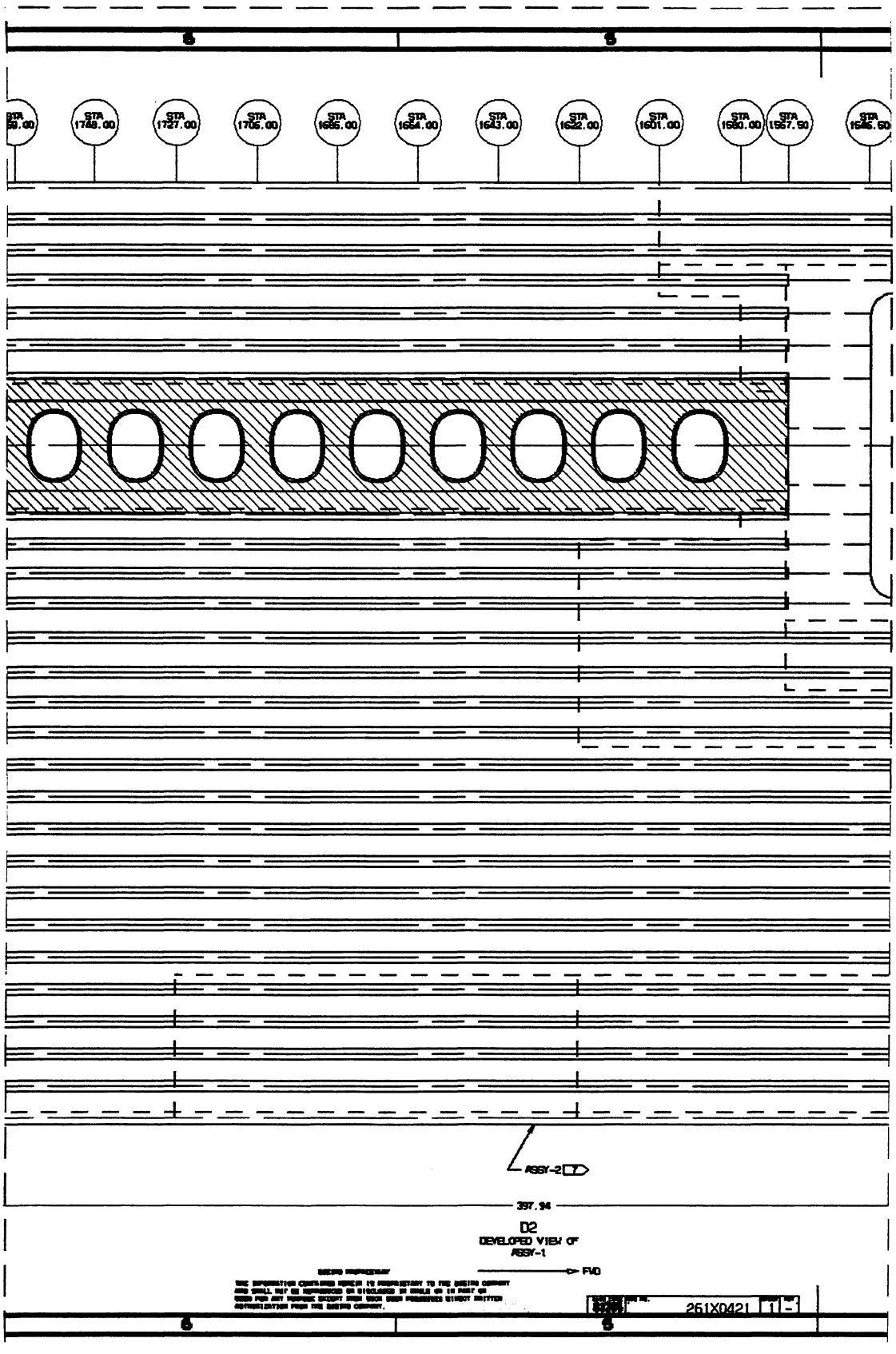
STA 1748.00
STA 1727.00
STA 1706.00
STA 1685.00
STA 1664.00
STA 1643.00
STA 1622.00
STA 1601.00
STA 1580.00
STA 1557.50
STA 1546.50
ASSY-2
397.94
D2
DEVELOPED VIEW OF ASSY-1
FWD
261X0421

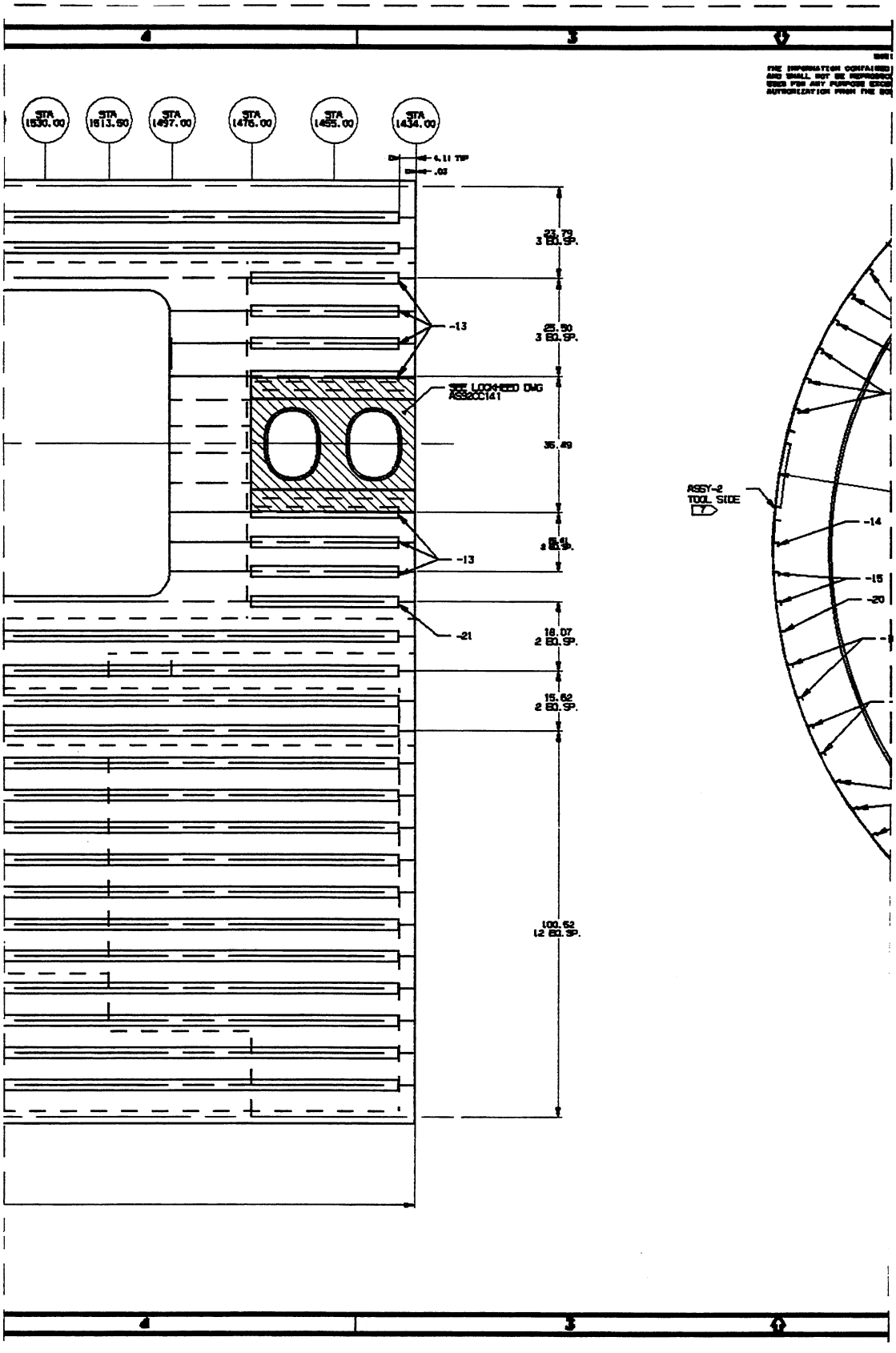
STA 1530.00
STA 1513.50
STA 1497.00
STA 1476.00
STA 1455.00
STA 1434.00
4.11 TYP
.03
23.79
3 EQ.SP.
25.50
3 EQ.SP.
35.49
18.07
2 EQ.SP.
15.62
2 EQ.SP.
100.52
12 EQ.SP.
-13
-13
-21
SEE LOCKHEED DWG
AS92CC141
ASSY-2
TOOL SIDE
-14
-15
-20

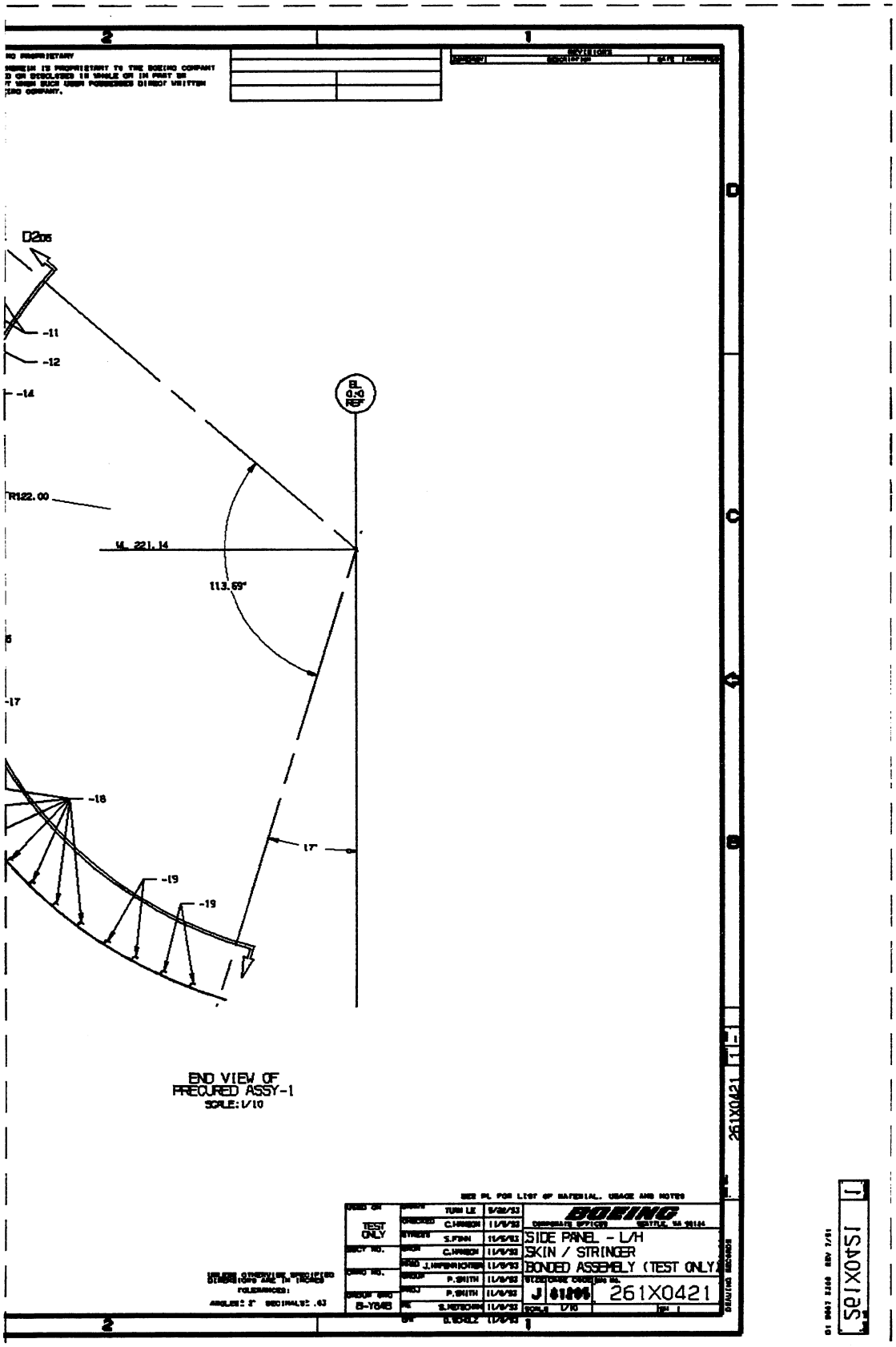

D2
-11
-12
-14
BL 0.0 REF
R122.00
WL 221.14
113.69°
-17
-18
17°
-19
-19
END VIEW OF
PRECURED ASSY-1
SCALE: 1/10
TEST ONLY
B-Y84B
BOEING
SIDE PANEL - L/H
SKIN / STRINGER
BONDED ASSEMBLY (TEST ONLY)
261X0421

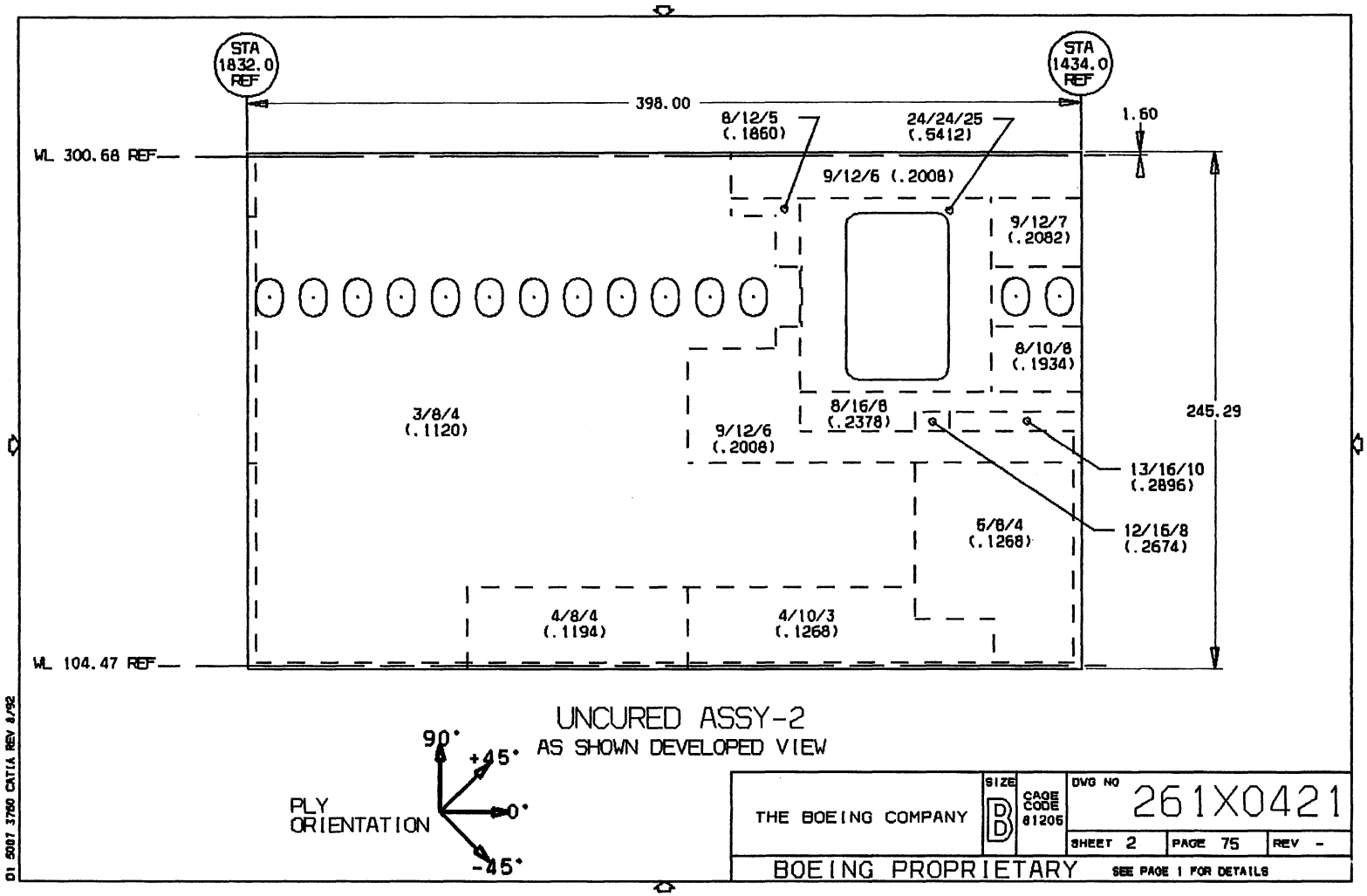

UNCURED ASSY-2
AS SHOWN DEVELOPED VIEW

THE BOEING COMPANY	SIZE B	CAGE CODE 81205	DWG NO 261X0421		
			SHEET 2	PAGE 75	REV -

BOEING PROPRIETARY SEE PAGE 1 FOR DETAILS

D1 6007 3760 CATIA REV 8/92

B-8

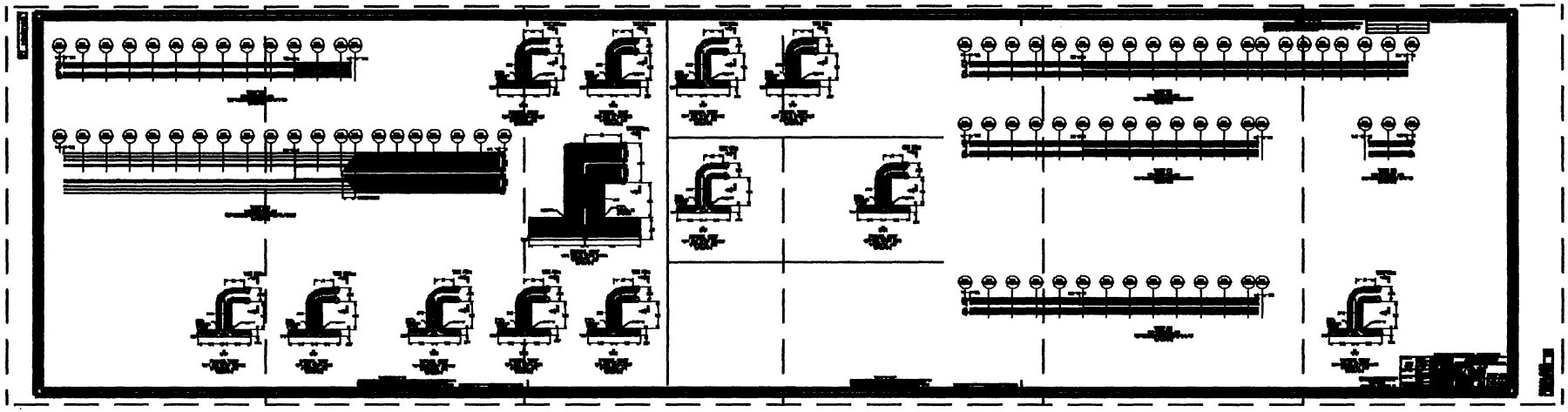

B-9 B-10 B-11 B-12 B-13 B-14

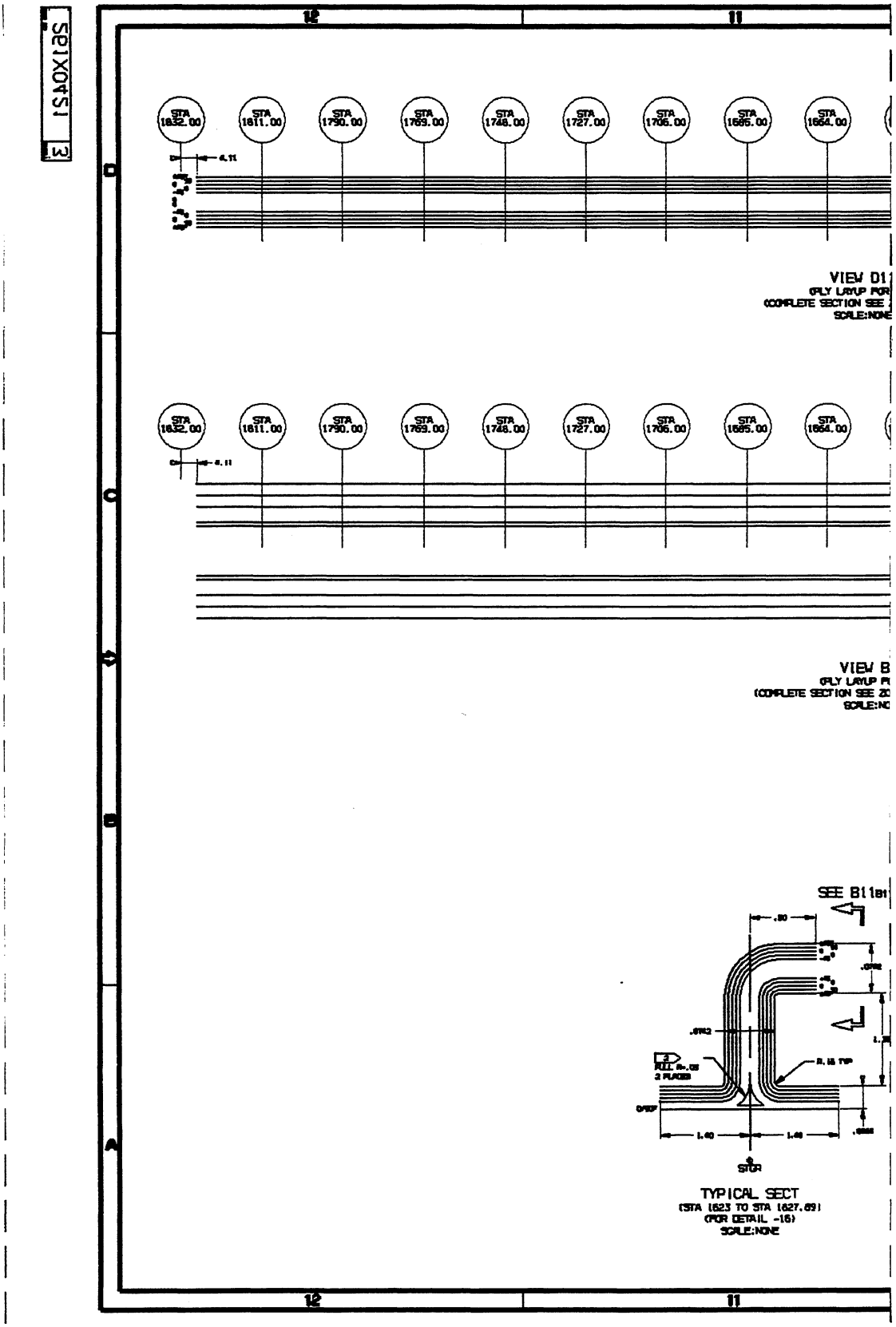
STA 1832.00
STA 1811.00
STA 1790.00
STA 1769.00
STA 1748.00
STA 1727.00
STA 1706.00
STA 1685.00
STA 1664.00
VIEW D1
(PLY LAYUP FOR
(COMPLETE SECTION SEE
SCALE:NONE
VIEW B
(PLY LAYUP F
(COMPLETE SECTION SEE 20
SCALE:NO
SEE B11B1
TYPICAL SECT
(STA 1623 TO STA 1627.89)
(FOR DETAIL -16)
SCALE:NONE

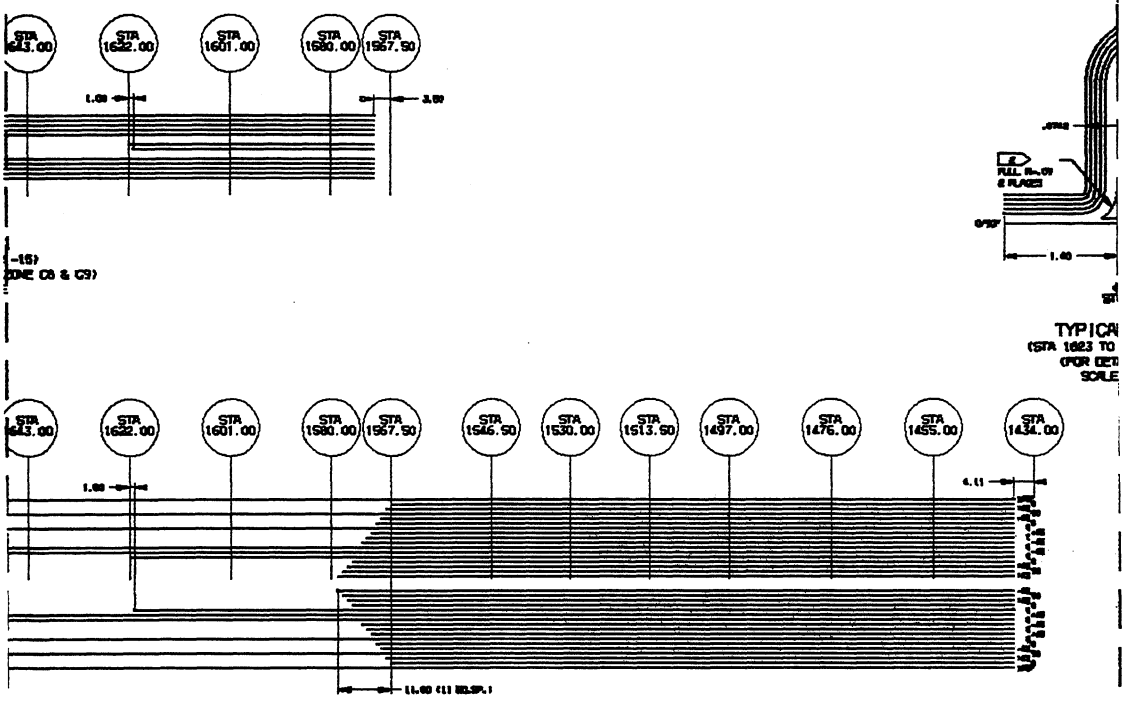

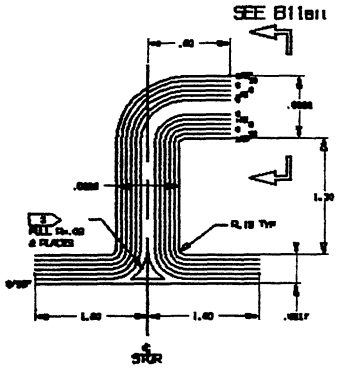

TYPICAL SECT
(STA 1579 TO STA 1622)
(FOR DETAIL -16)
SCALE:NONE

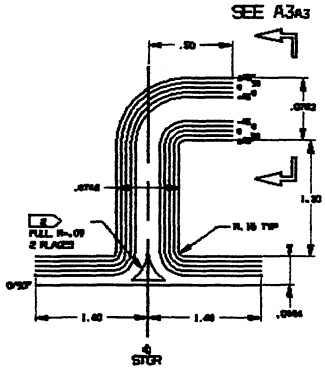

TYPICAL SECT
(STA 1726 TO STA 1827.89)
(FOR DETAIL -14)
SCALE:NONE

BOEING PROPRIETARY
THE INFORMATION CONTAINED HEREIN IS PROPRIETARY TO THE BOEING COMPANY AND SHALL NOT BE REPRODUCED OR DISCLOSED IN WHOLE OR IN PART OR USED FOR ANY PURPOSE EXCEPT WHEN SUCH USE POSSESSES DIRECT WRITTEN AUTHORIZATION FROM THE BOEING COMPANY.

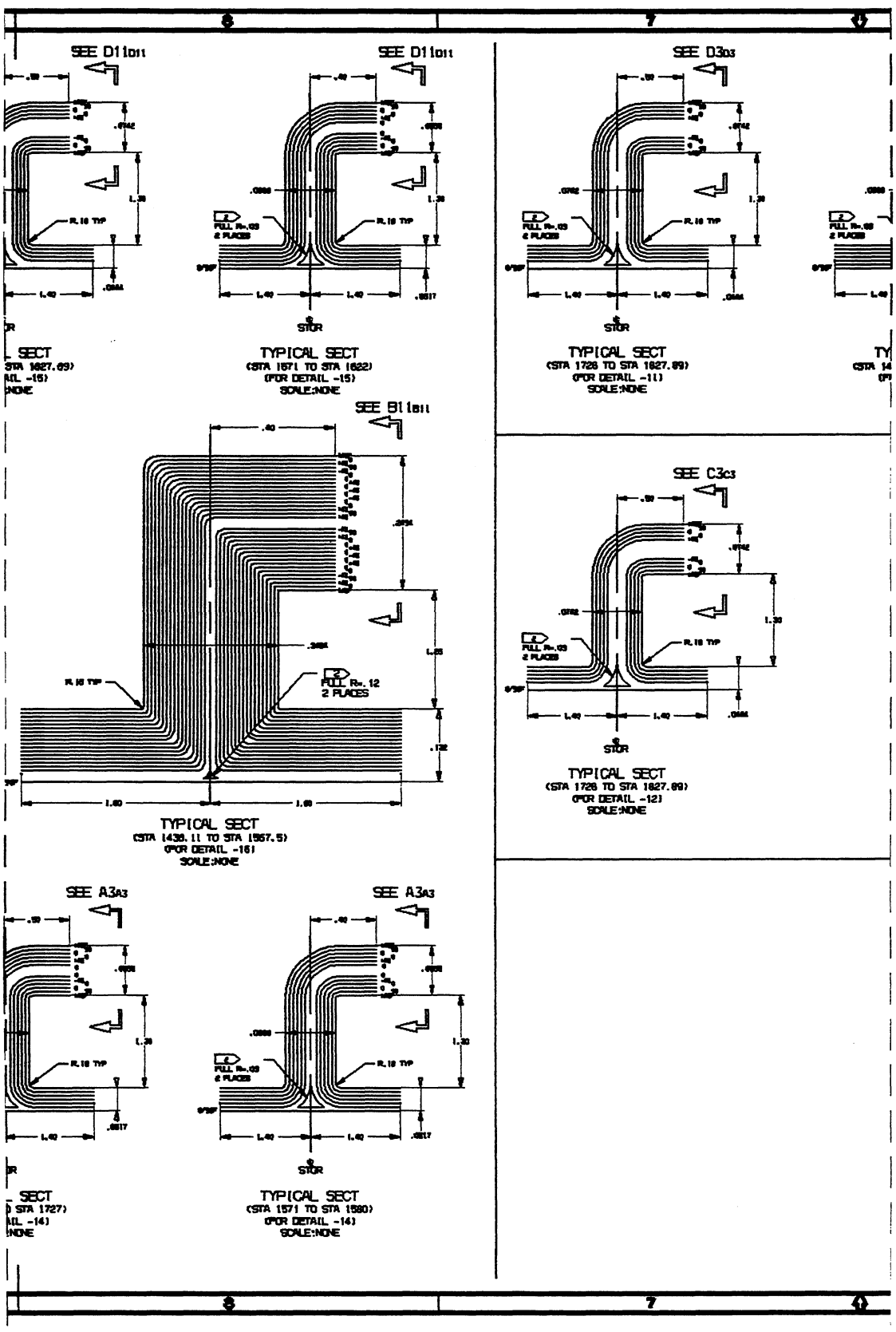
SEE D11D11
SEE D11D11
SEE D3D3
TYPICAL SECT
(STA 1671 TO STA 1822)
(FOR DETAIL -15)
SCALE:NONE
TYPICAL SECT
(STA 1726 TO STA 1827.89)
(FOR DETAIL -11)
SCALE:NONE
SEE B11B11
TYPICAL SECT
(STA 1438.11 TO STA 1567.5)
(FOR DETAIL -16)
SCALE:NONE
SEE C3C3
TYPICAL SECT
(STA 1726 TO STA 1827.89)
(FOR DETAIL -12)
SCALE:NONE
SEE A3A3
SEE A3A3
TYPICAL SECT
(STA 1571 TO STA 1580)
(FOR DETAIL -14)
SCALE:NONE

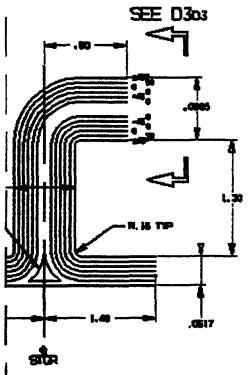

PICAL SECT
30.11 TO STA 17271
R DETAIL -111
SCALE:NONE

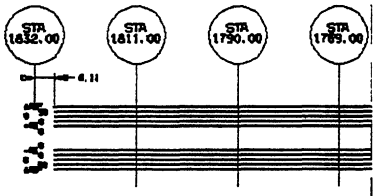

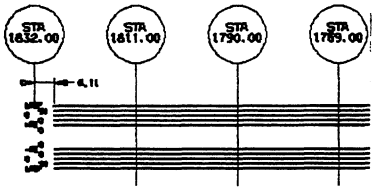

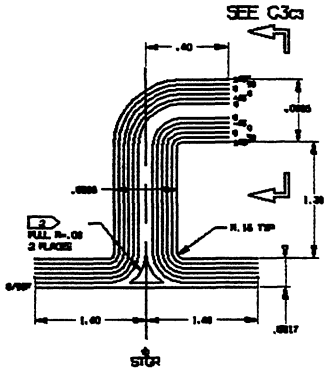

TYPICAL SECT
(STA 1671 TO STA 17271
(FOR DETAIL -12)
SCALE:NONE

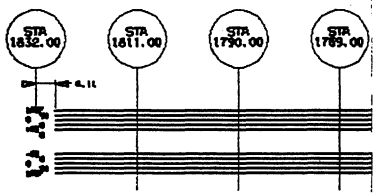

THE INFORMATION CONTAINED HEREIN IS PROPRIETARY TO THE BOEING COMPANY AND SHALL NOT BE REPRODUCED OR DISCLOSED IN WHOLE OR IN PART OR USED FOR ANY PURPOSE EXCEPT WHEN SUCH USE PURSUANT TO DIRECT WRITTEN AUTHORIZATION FROM THE BOEING COMPANY.

261X0421

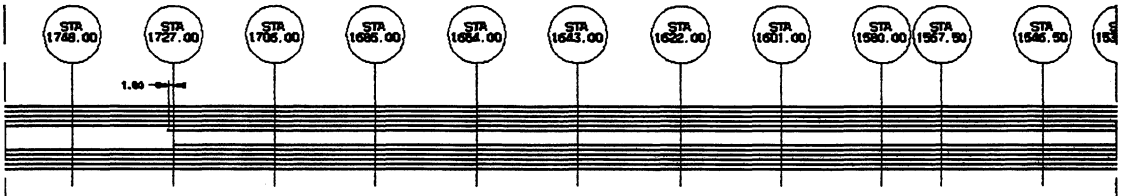

VIEW D3
(PLY LAYUP FOR -11)
(COMPLETE SECTION SEE ZONE C5 & C7)
SCALE:NONE

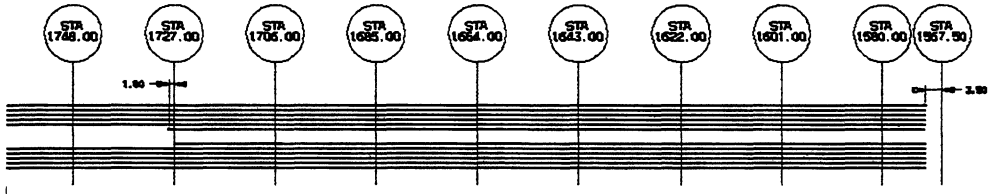

VIEW C3
(PLY LAYUP FOR -12)
(COMPLETE SECTION SEE ZONE B6 & B7)
SCALE:NONE

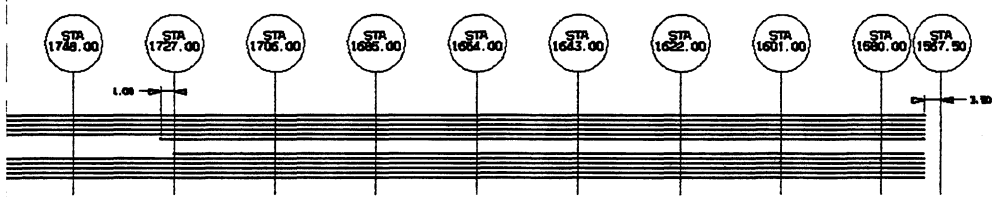

VIEW A3
(PLY LAYUP FOR -14)
(COMPLETE SECTION SEE ZONE A6 & A9)
SCALE:NONE

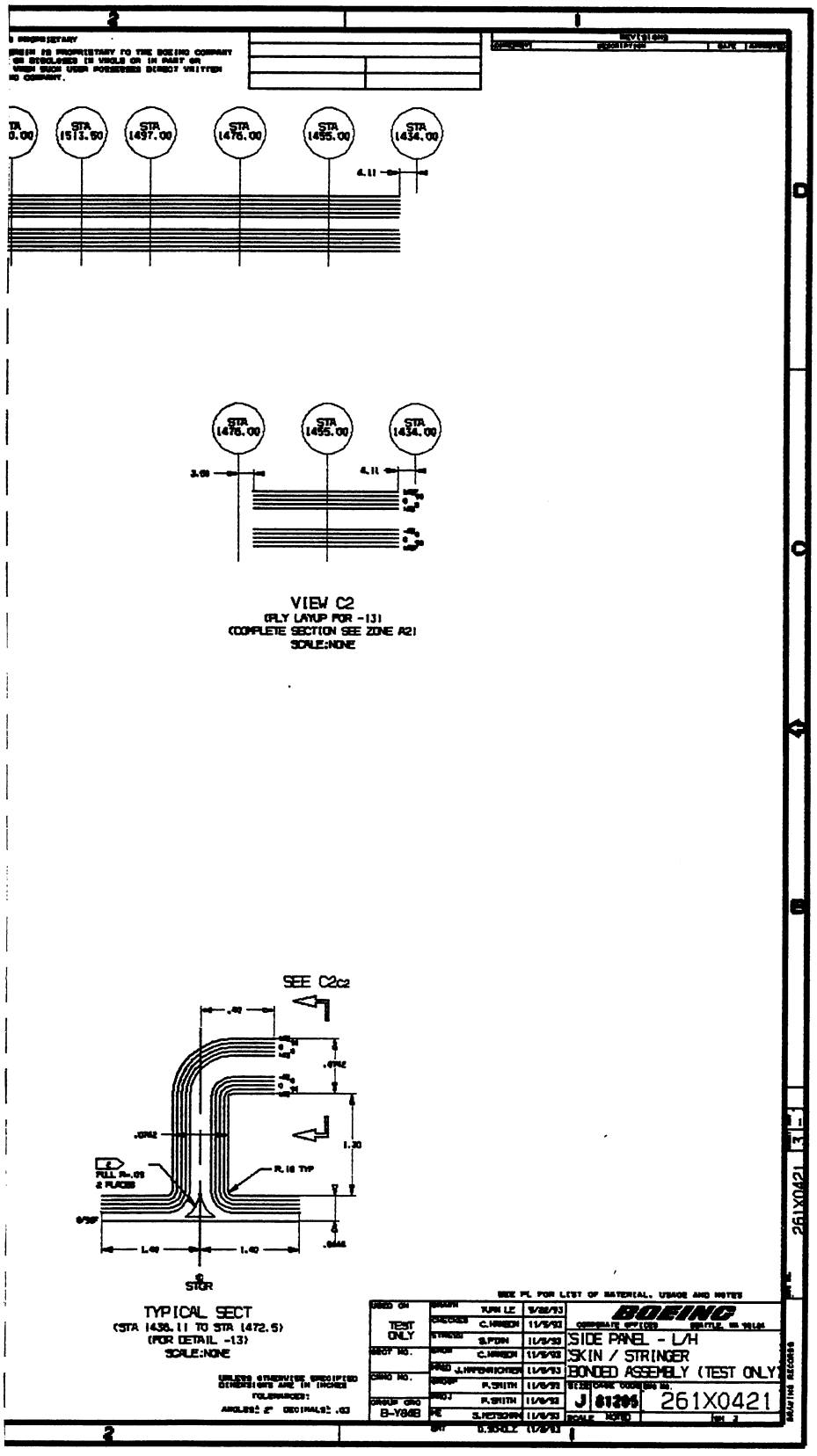
STA 1513.50
STA 1497.00
STA 1476.00
STA 1455.00
STA 1434.00
4.11
3.00
VIEW C2
PLY LAYUP FOR -13
COMPLETE SECTION SEE ZONE A21
SCALE:NONE
SEE C2c2
R.18 TYP
1.30
1.40
1.40
STGR
TYPICAL SECT
(STA 1436.11 TO STA 1472.5)
(FOR DETAIL -13)
SCALE:NONE
SEE PL FOR LIST OF MATERIAL, USAGE AND NOTES
TEST ONLY
B-Y848
BOEING
SIDE PANEL - L/H
SKIN / STRINGER
BONDED ASSEMBLY (TEST ONLY)
J 81206
261X0421
261X0421

B-15

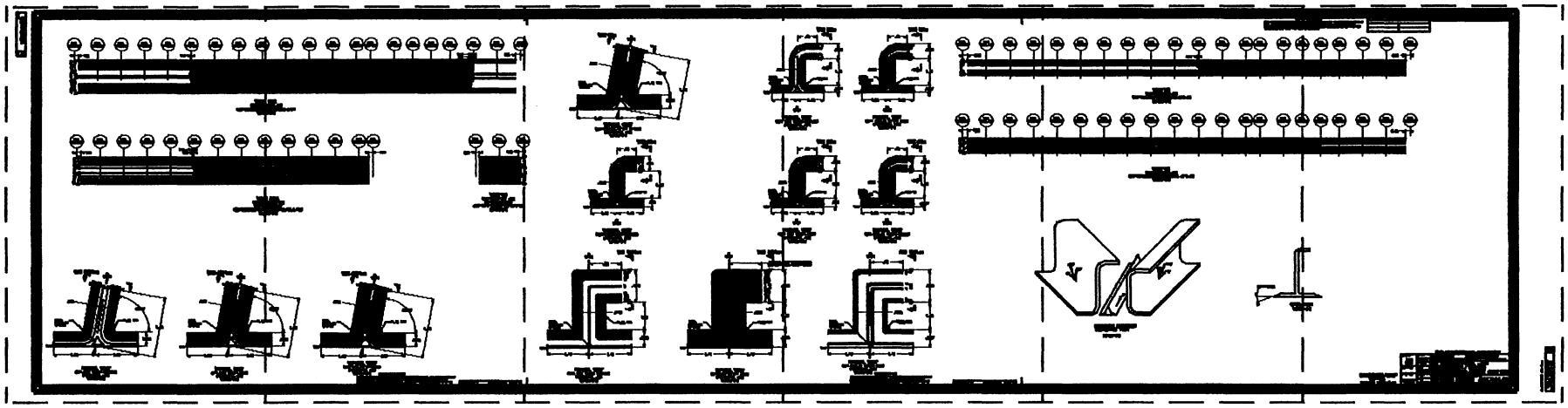

B-16 B-17 B-18 B-19 B-20 B-21

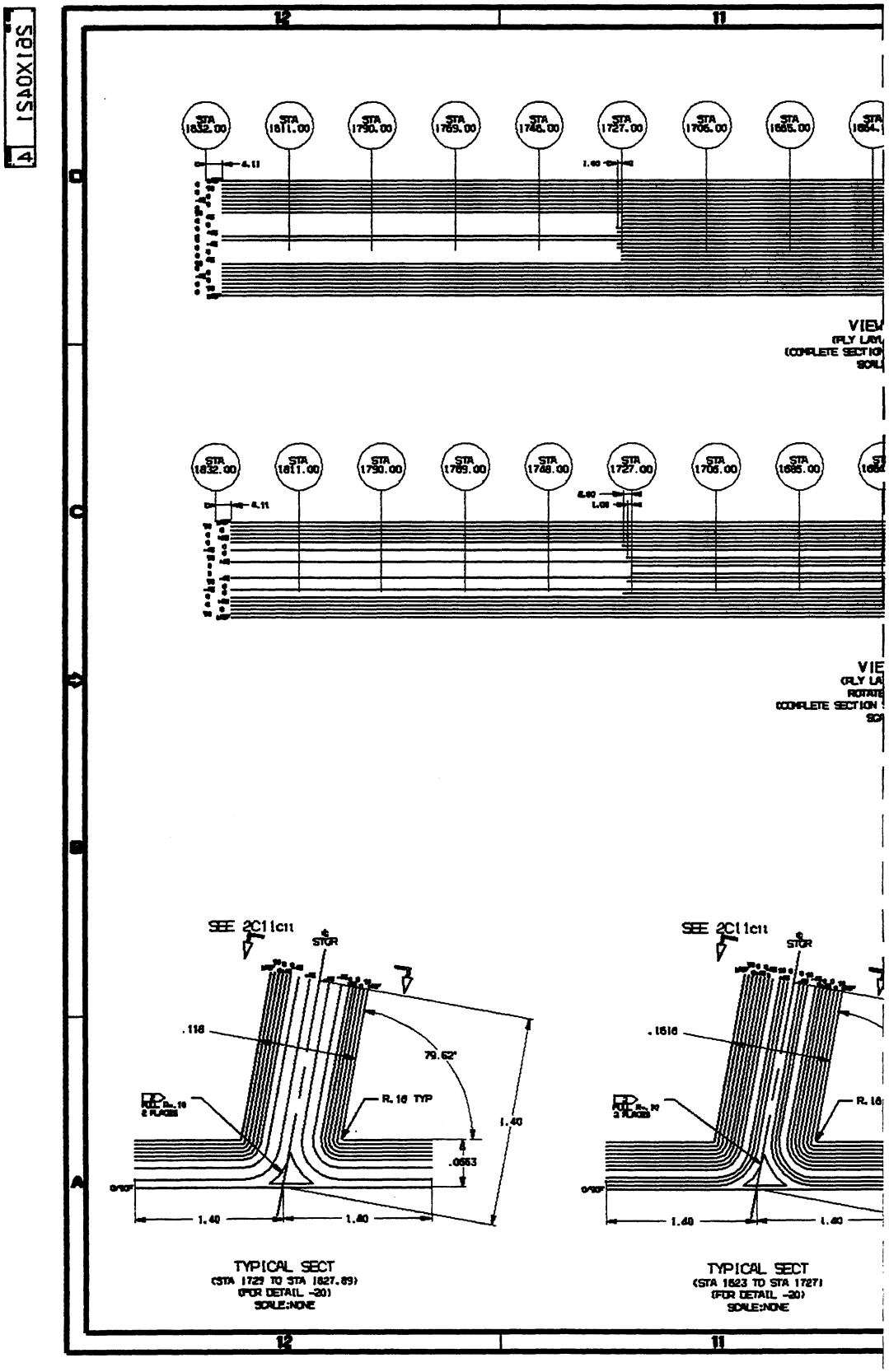
STA 1832.00
STA 1811.00
STA 1790.00
STA 1769.00
STA 1748.00
STA 1727.00
STA 1706.00
STA 1685.00
4.11
1.00
SEE 2C11c11
STOR
.118
79.62°
R. 16 TYP
1.40
.0553
1.40
1.40
.1616
R. 16
TYPICAL SECT
(STA 1729 TO STA 1827.89)
(FOR DETAIL -20)
SCALE:NONE
TYPICAL SECT
(STA 1523 TO STA 1727)
(FOR DETAIL -20)
SCALE:NONE

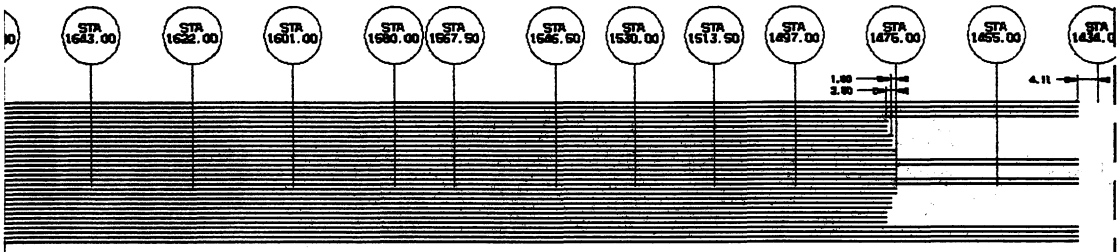

1C11
P FOR -19)
SEE ZONE C5 & C7)
E:NONE

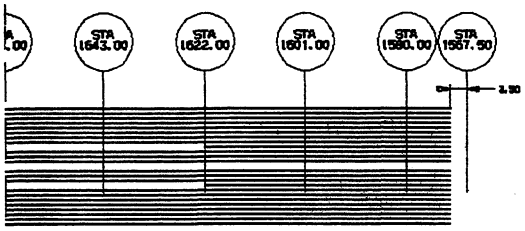

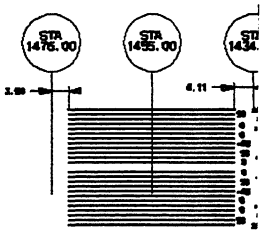

W 2C11
/UP FOR -20)
D 79.62° CW
EE ZONE A10, A11, & A12)
LE:NONE

VIEW C9
(RLY LAYUP FOR -21)
ROTATED 79.62° CW
(COMPLETE SECTION SEE ZONE D9)
SCALE:NONE

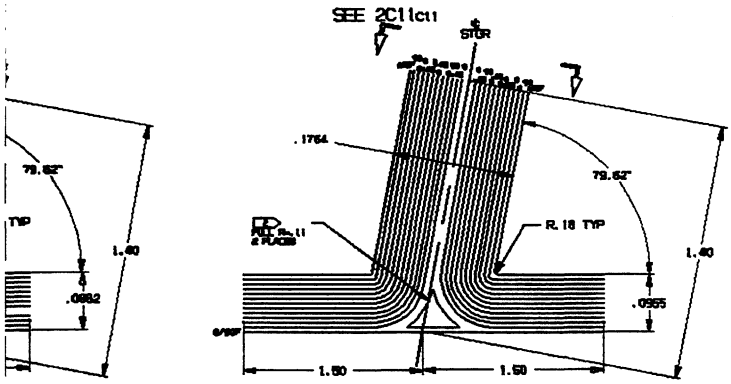

TYPICAL SECT
(STA 1571 TO STA 1622)
(FOR DETAIL -20)
SCALE:NONE

BOEING PROPRIETARY
THE INFORMATION CONTAINED HEREIN IS PROPRIETARY TO THE BOEING COMPANY AND SHALL NOT BE REPRODUCED OR DISCLOSED IN WHOLE OR IN PART OR USED FOR ANY PURPOSE EXCEPT WHEN SUCH USER POSSESSES DIRECT WRITTEN AUTHORIZATION FROM THE BOEING COMPANY.

261X0421 4

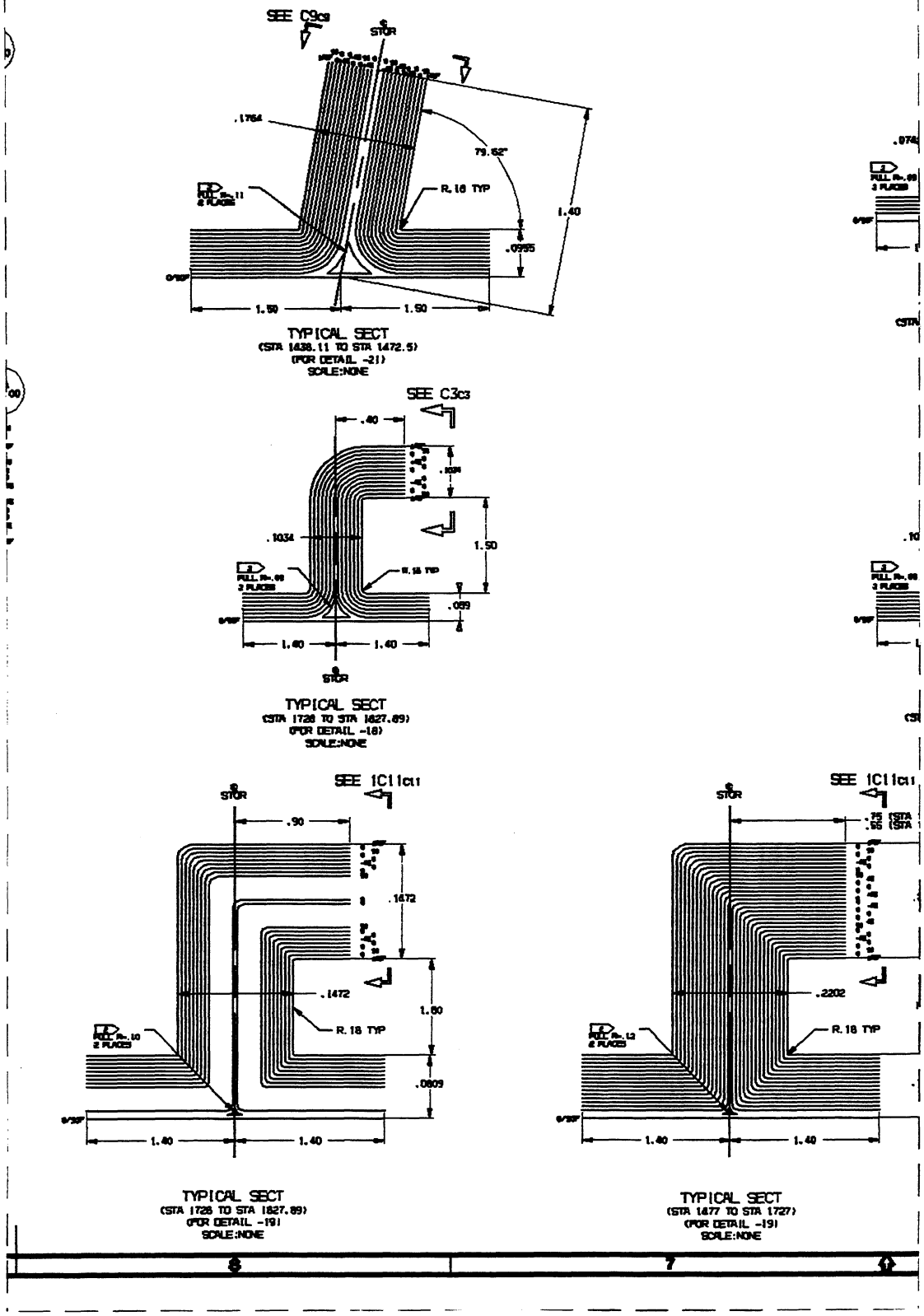
SEE C9c9
STOR
.1764
79.62°
R.18 TYP
1.40
.0995
1.50
1.50
TYPICAL SECT
(STA 1438.11 TO STA 1472.5)
(FOR DETAIL -21)
SCALE:NONE
SEE C3c3
.40
.1034
1.50
R.18 TYP
.059
1.40
1.40
STOR
TYPICAL SECT
(STA 1728 TO STA 1827.89)
(FOR DETAIL -18)
SCALE:NONE
SEE 1C11c11
STOR
.90
.1472
.1472
1.80
R.18 TYP
.0809
1.40
1.40
TYPICAL SECT
(STA 1728 TO STA 1827.89)
(FOR DETAIL -19)
SCALE:NONE
SEE 1C11c11
STOR
.2202
R.18 TYP
1.40
1.40
TYPICAL SECT
(STA 1477 TO STA 1727)
(FOR DETAIL -19)
SCALE:NONE

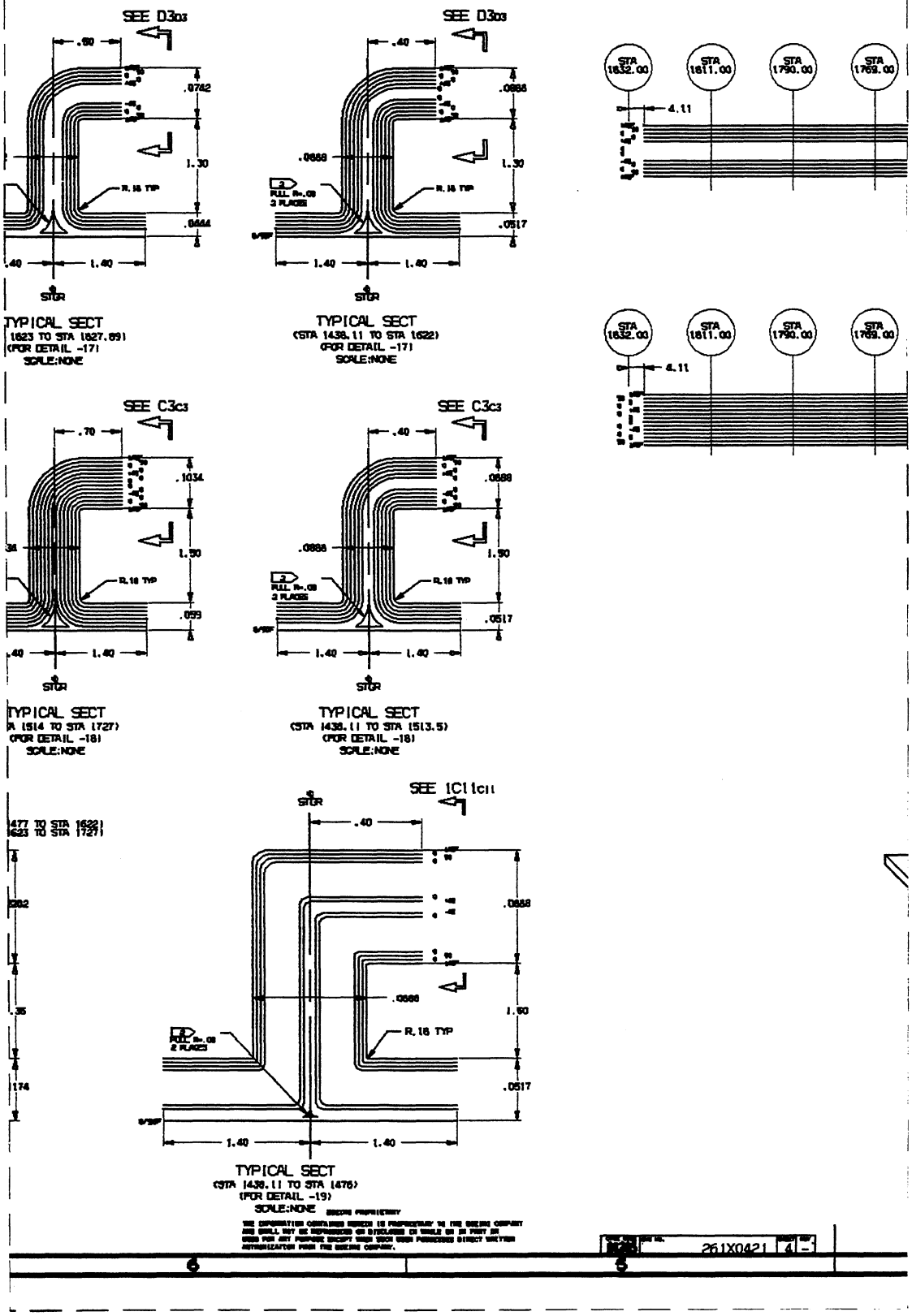

TYPICAL SECT
1623 TO STA 1627.89)
(FOR DETAIL -17)
SCALE:NONE

TYPICAL SECT
(STA 1438.11 TO STA 1622)
(FOR DETAIL -17)
SCALE:NONE

TYPICAL SECT
A 1514 TO STA 1727)
(FOR DETAIL -18)
SCALE:NONE

TYPICAL SECT
(STA 1438.11 TO STA 1513.5)
(FOR DETAIL -18)
SCALE:NONE

1477 TO STA 1622)
1623 TO STA 1727)

TYPICAL SECT
(STA 1438.11 TO STA 1476)
(FOR DETAIL -19)
SCALE:NONE

THE INFORMATION CONTAINED HEREIN IS PROPRIETARY TO THE BOEING COMPANY AND SHALL NOT BE REPRODUCED OR DISCLOSED IN WHOLE OR IN PART OR USED FOR ANY PURPOSE EXCEPT THAT FOR WHICH PERMISSION IS DIRECT WRITTEN AUTHORIZATION FROM THE BOEING COMPANY.

261X0421 4 -

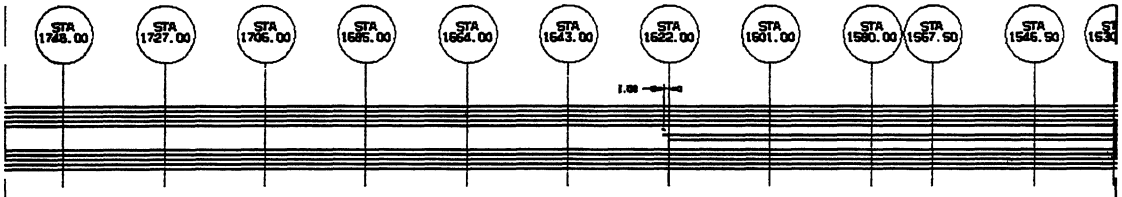

VIEW D3
(PLY LAYUP PER -17)
(COMPLETE SECTION SEE ZONE C6 & C7)
SCALE:NONE

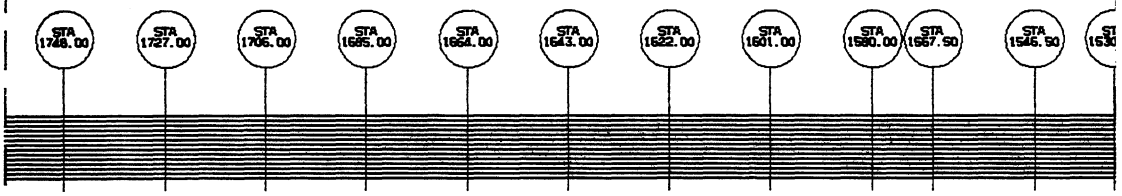

VIEW C3
(PLY LAYUP PER -18)
(COMPLETE SECTION SEE ZONE C6, C7 & C8)
SCALE:NONE

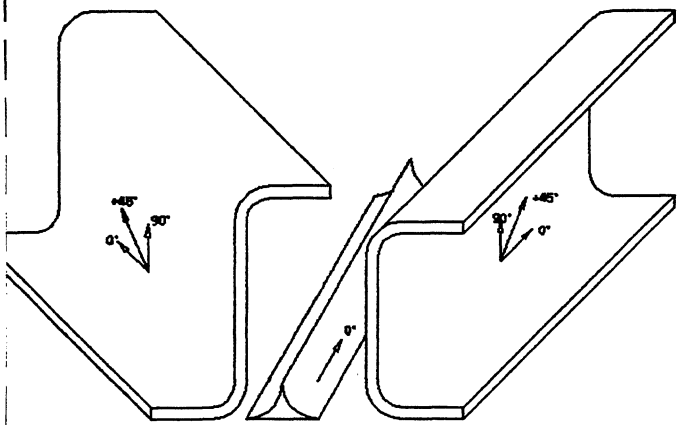

EXPLODED STRINGER
ISOMETRIC VIEW
SCALE:NONE

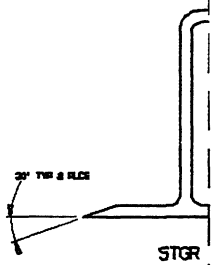

STGR
SCALE

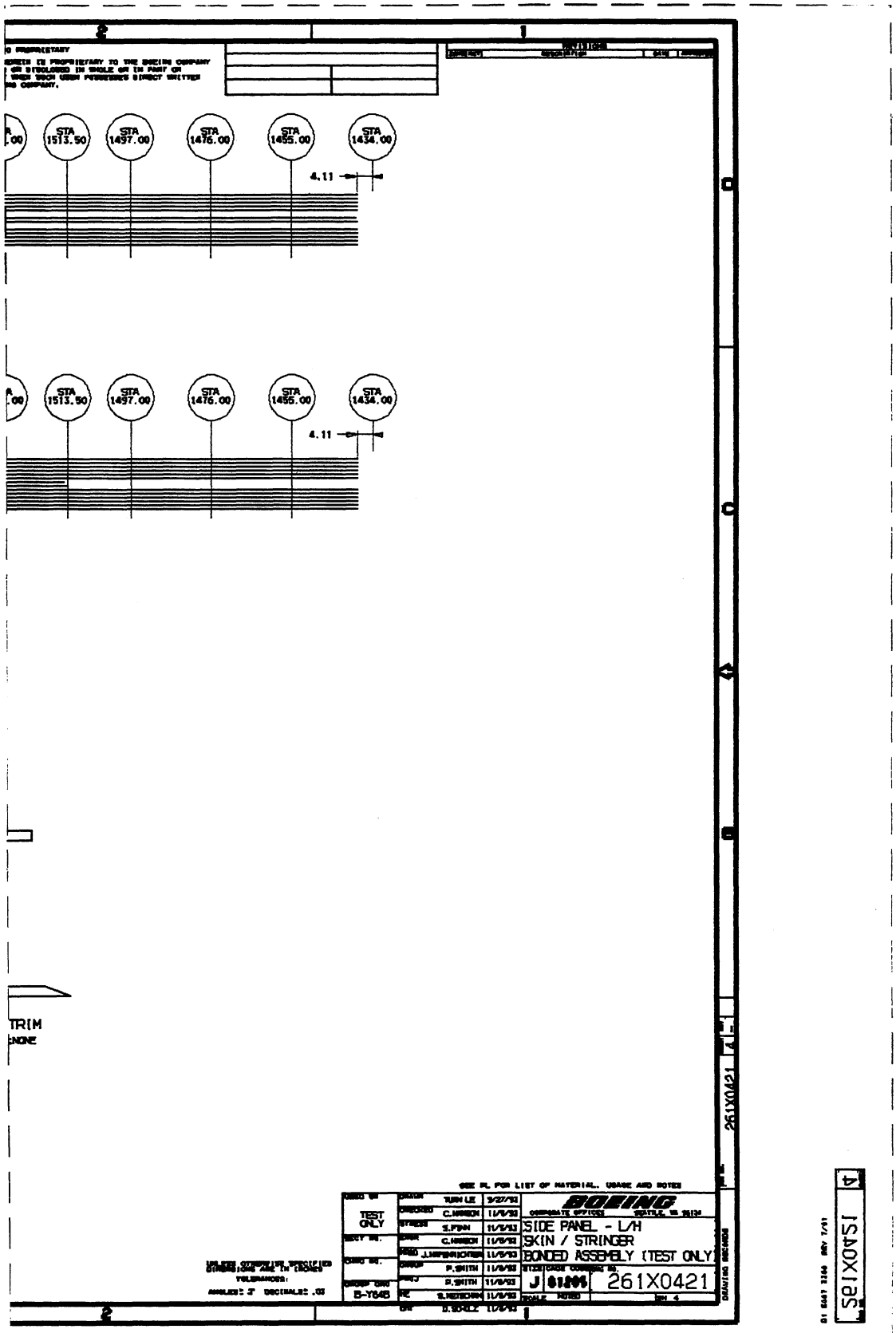
STA 1513.50
STA 1497.00
STA 1476.00
STA 1455.00
STA 1434.00
4.11
TRIM
NONE
SEE PL FOR LIST OF MATERIAL, USAGE AND NOTES
TEST ONLY
B-Y64B
BOEING
SIDE PANEL - L/H
SKIN / STRINGER
BONDED ASSEMBLY (TEST ONLY)
261X0421
261X0421

THIS MATERIAL CONTAINS PROPRIETARY INFORMATION OF LOCKHEED AERONAUTICAL SYSTEMS COMPANY. DISCLOSURE TO OTHERS, USE OR COPYING WITHOUT EXPRESS WRITTEN AUTHORIZATION OF LOCKHEED AERONAUTICAL SYSTEMS COMPANY IS STRICTLY PROHIBITED.
© 1992 LOCKHEED CORPORATION UNPUBLISHED WORK. ALL RIGHTS RESERVED.

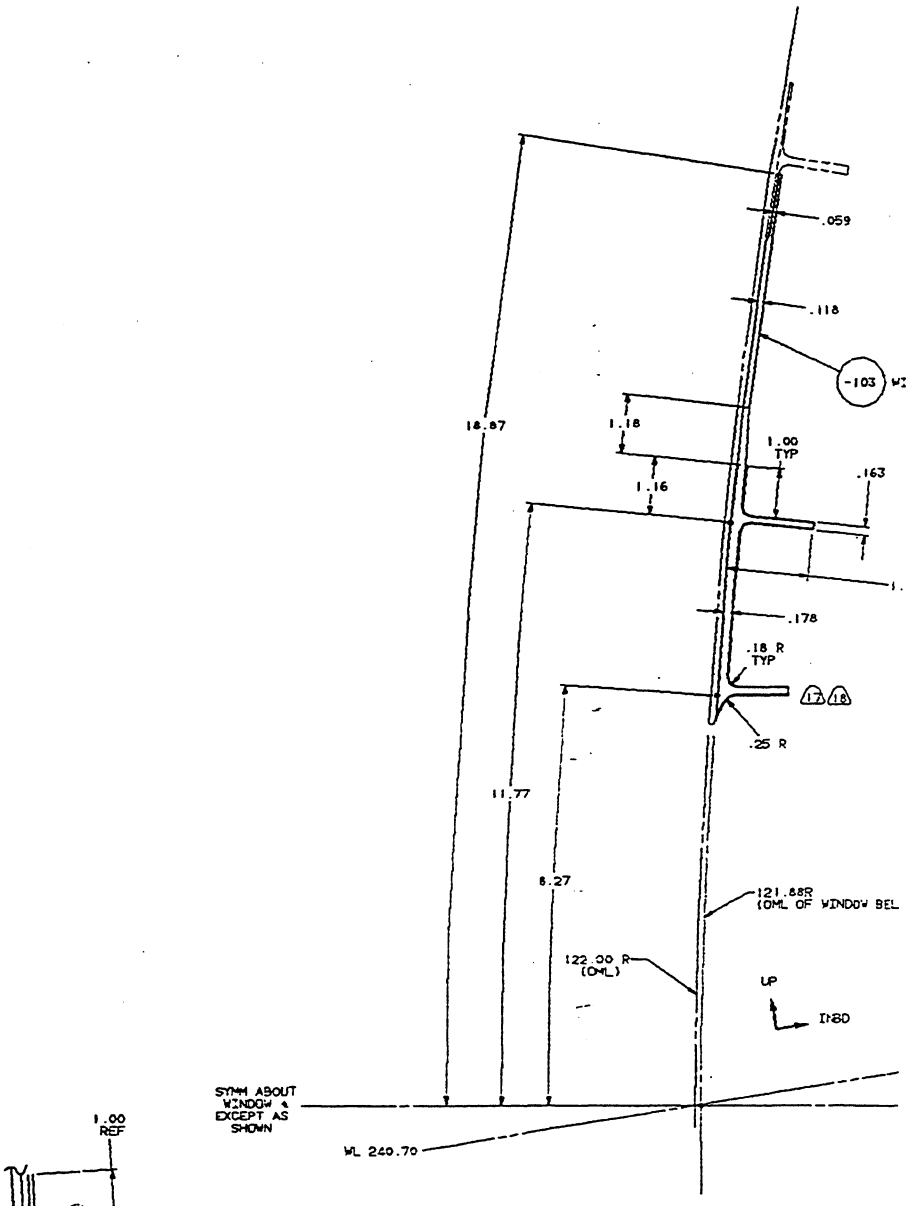

SECTION A-A IH11
VIEW LOOKING FWD
SCALE 1/1

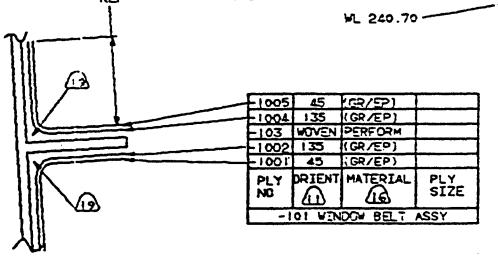

PLY NO	ORIENT (11)	MATERIAL (16)	PLY SIZE
-1005	45	(GR/EP)	
-1004	135	(GR/EP)	
-103	WOVEN	PERFORM	
-1002	135	(GR/EP)	
-1001	45	(GR/EP)	

-101 WINDOW BELT ASSY

SECTION C-C IF13
SCALE NONE
(VIEW TYPICAL AT STIFFENER LOCATIONS)

DWG NO. AS92CC141

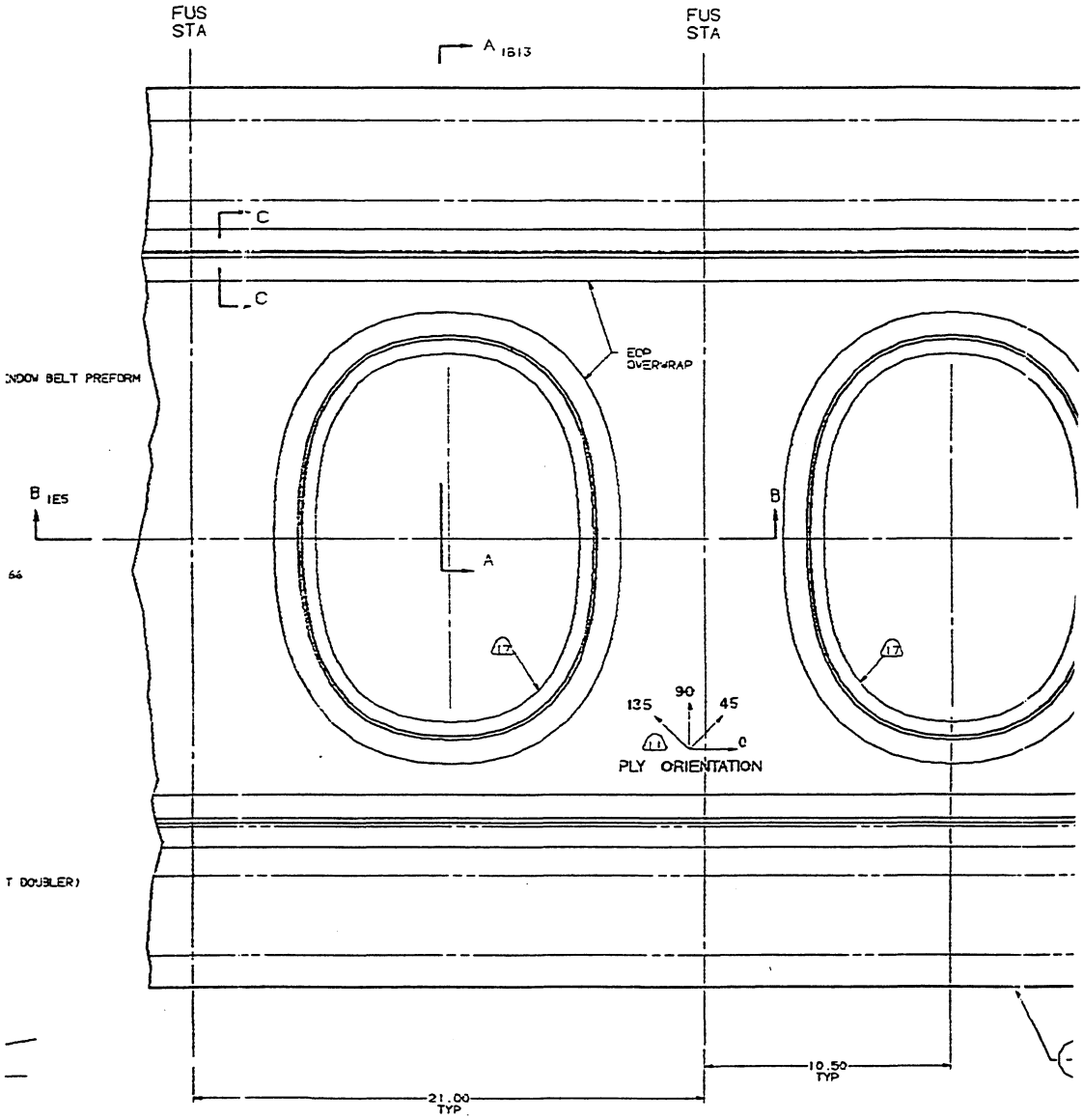

VIEW LOOKING OUTBD, LHS

-103 PANEL PREFORM ARCHITECTURE TABLE

PANEL AREA	0° FIBER ANGLE			±45°/135° FIBER ANGLE			90° FIBER ANGLE			THROUGH THE THICKNESS FIBER		
	MATL TYPE	TOW SIZE	FIBER %	MATL TYPE	TOW SIZE	FIBER %	MATL TYPE	TOW SIZE	FIBER %	MATL TYPE	TOW SIZE	FIBER %
SKIN	13	6K	25	13	6K	50	13	6K	25	14	2 PLY	1.0
STIFF	13	6K	82	---	---	0	13	6K	18	14	2 PLY	2.0

REV 1

FRAME 1 OF 2

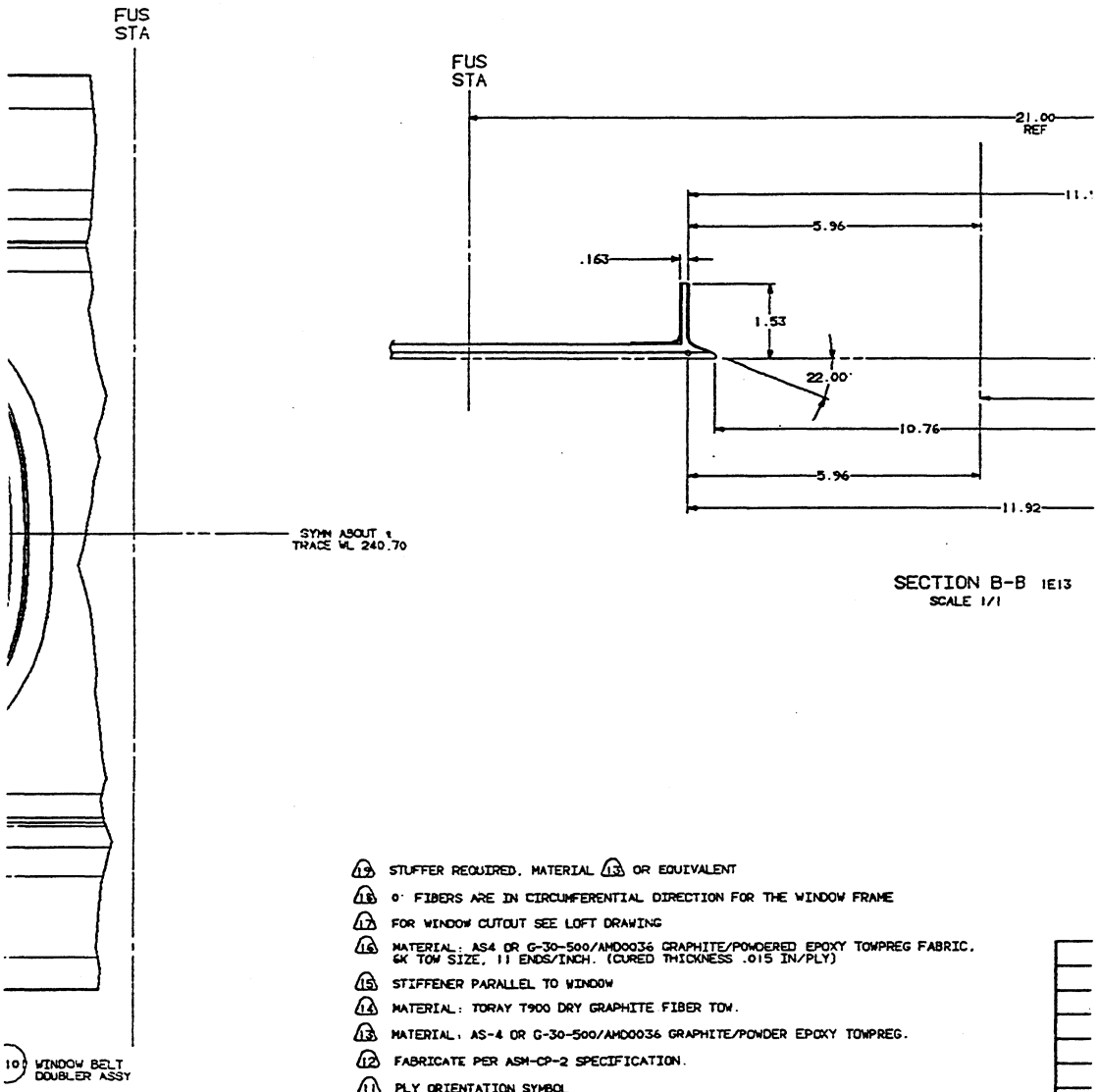

SECTION B-B 1E13
SCALE 1/1

(19) STUFFER REQUIRED. MATERIAL (13) OR EQUIVALENT

(18) 0° FIBERS ARE IN CIRCUMFERENTIAL DIRECTION FOR THE WINDOW FRAME

(17) FOR WINDOW CUTOUT SEE LOFT DRAWING

(16) MATERIAL: AS4 OR G-30-500/AMD0036 GRAPHITE/POWDERED EPOXY TOWPREG FABRIC, 6K TOW SIZE, 11 ENDS/INCH. (CURED THICKNESS .015 IN/PLY)

(15) STIFFENER PARALLEL TO WINDOW

(14) MATERIAL: TORAY T900 DRY GRAPHITE FIBER TOW.

(13) MATERIAL: AS-4 OR G-30-500/AMD0036 GRAPHITE/POWDER EPOXY TOWPREG.

(12) FABRICATE PER ASM-CP-2 SPECIFICATION.

(11) PLY ORIENTATION SYMBOL

10 LAST VIEW OR SECTION LETTER C.

9 LAST PLY NUMBER IS -1004.

8 QA INSPECT PER 5PTPCT01.

7 PLY SIZE AND EXTRA SCRAP DETERMINED BY MANUFACTURING.

6 PLY ORIENTATION SYMBOL SHOWN ON THIS DWG. SHOULD BE USED (DISREGARD THOSE SYMBOLS SHOWN IN DRAFTING PRACTICE MANUAL, ENGINEERING DESIGN HANDBOOK, MANUFACTURING PROCCESS SPECIFICATION, ETC.)

5 IMPRESSION STAMPING NOT PERMITTED

4 REGARDING STANDARD PARTS: REFER TO ENGINEERING STANDARDS MANUAL VOLUME 2 FOR APPROVED INTERCHANGEABLE EQUIVALENTS, SUPERSEDING PARTS, SOURCES, AND PROCUREMENT/QUALITY ASSURANCE REQUIREMENTS.

3 ABBREVIATIONS PER DRAWING 152893 AND MIL-STD-12.

2 ODD DASH NUMBER SHOWN NEXT HIGHER CONSECUTIVE EVEN DASH NUMBER-OPPOSITE.

1 THIS DRAWING WAS PREPARED BY COMPUTER PLOT. SEE RN FOR SIGNATURES.

NOTE:

CADAM DWG

CAD MAINTAINED. CHANGES SHALL BE INCORPORATED B THE DESIGN ACTIVITY.

FRAM

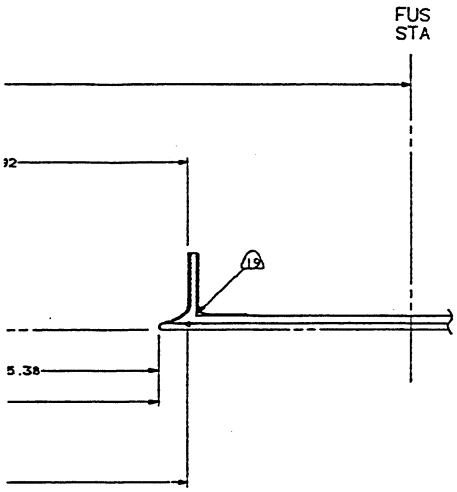

PRELIMINARY DWG
NASA-ACT

REVISIONS		
ZONE	REV	DESCRIPTION

REQD DASH NO.	QTY REQD PER DASH NO.	CAGE CODE	SER NOTE	PART OR IDENTIFYING NO.	SH & ZONE	FIND NO	NOMENCLATURE OR DESCRIPTION	MATERIAL NOTE OR REFERENCE NO.	MATERIAL SIZE OR SHAPE	MATERIAL SPECIFICATION	FINAL CONDITION	PROCESS SPEC OR FINISH CODE	I & T CODE
	1			-103			WINDOW BELT PREFORM						
	-			-101			WINDOW BELT DOUBLER ASSY			15 16		12	
	-101												

PARTS LIST

REGULATED ASSEMBLY NUMBER	DASH NO.	NEXT ASSEMBLY	USED ON	NEXT ASSY	USED ON
	APPLICATION			QTY REQD	

UNLESS OTHERWISE SPECIFIED DIMENSIONS ARE IN INCHES
TOLERANCES ON: FRACTIONS ±1/16 | DECIMALS .X ±1, .XX ±.03, .XXX ±.010 | ANGLES ±2°
REFERENCE ABBREVIATIONS-DS5925
THIRD ANGLE PROJECTION

	NAME	DATE
CONTRACT NO. NAS1-18888		CODE
ENGR RL CHU		6-8-93
CHKLT ADAMS		6-3-93
STRESS MAIRR		6-3-93
SUPV BARRIE		6-3-93
PROD OSBORNE		6-3-93
MFG SKOLNIK		6-3-93
M/P SHUKLA		

LOCKHEED AERONAUTICAL SYSTEMS COMPANY
MARIETTA, GEORGIA

WOVEN WINDOW BELT
CONCEPT. (TECHNIWEAVE)

SIZE	CAGE CODE	DWG NO.
J	98897	AS92CC141

SCALE 1/2 NOTE | SHEET 1 OF 1

JOB NO.

B-26

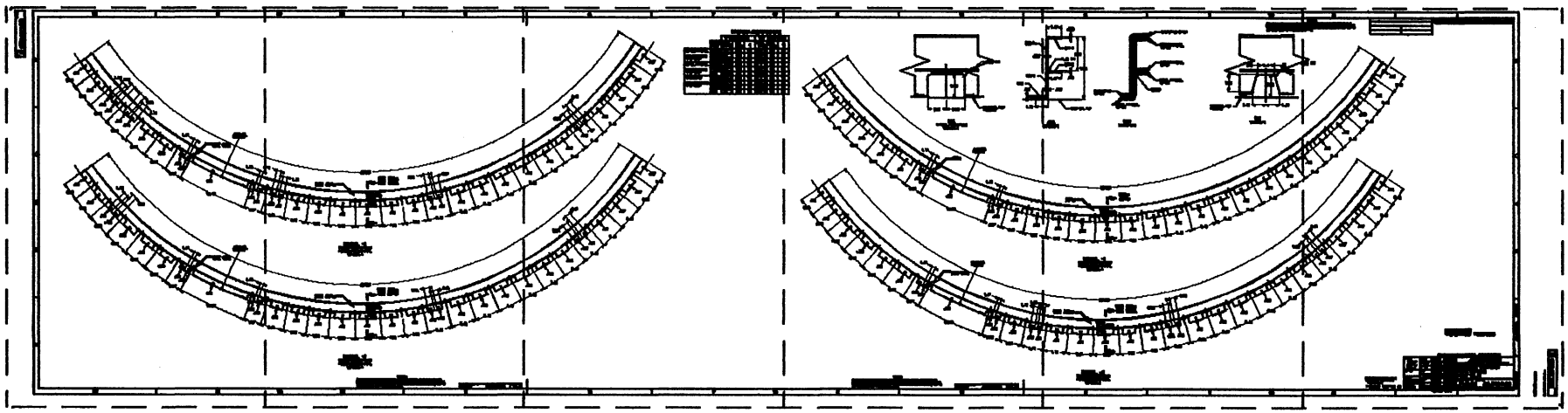

B-27 B-28 B-29 B-30 B-31 B-32

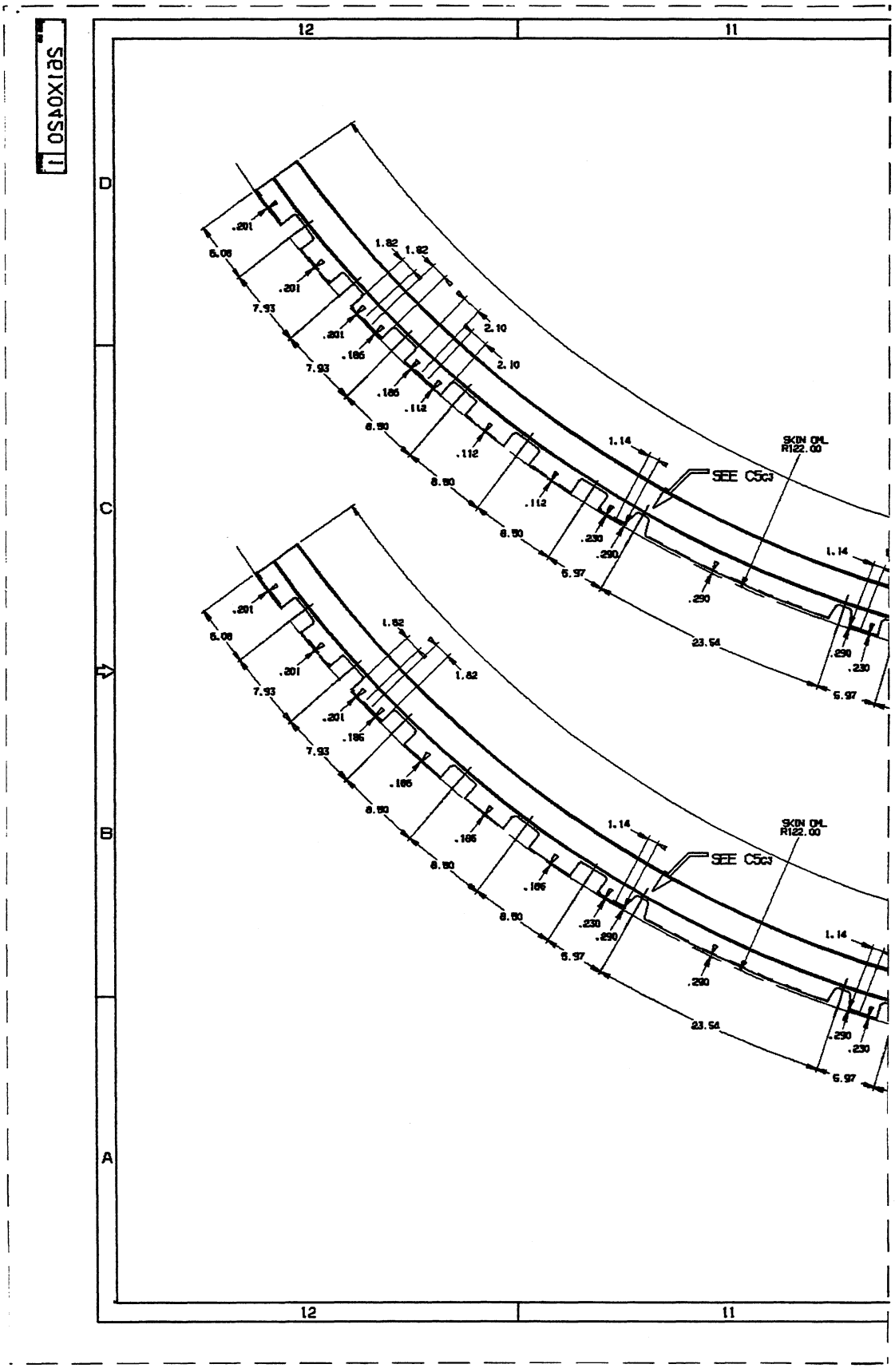
12
11
D
C
B
A
SEE C5c3
SKIN OML
R122.00
1.14
2.10
1.82
.201
.186
.112
.230
.290
6.08
7.93
8.50
5.97
23.54

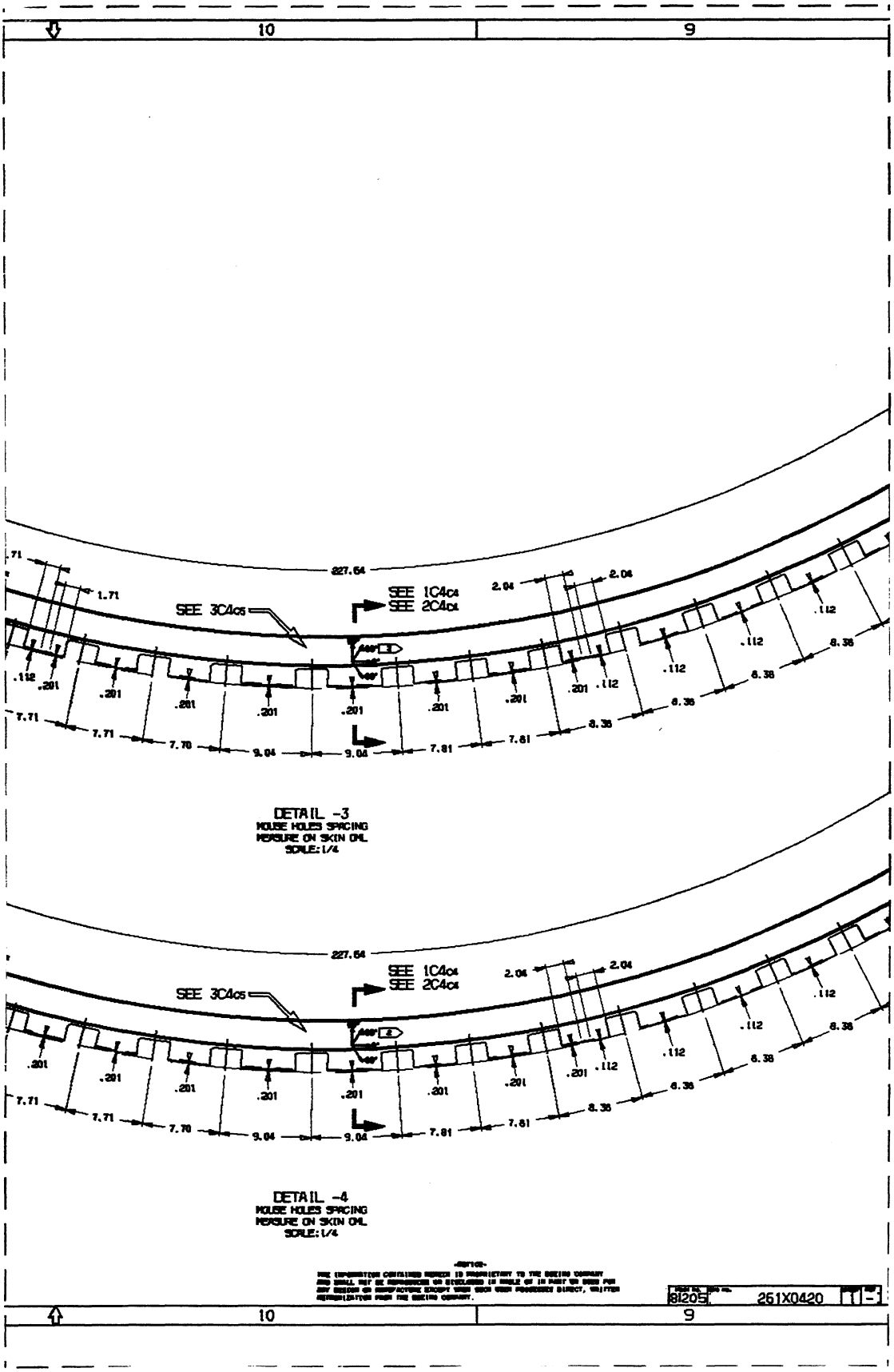
10
9
227.64
SEE 3C4c5
SEE 1C4c4
SEE 2C4c4
1.71
2.04
.112
.201
7.71
7.70
9.04
7.81
8.38
DETAIL -3
MOUSE HOLES SPACING
MEASURE ON SKIN CHL
SCALE: 1/4
227.64
SEE 3C4c5
SEE 1C4c4
SEE 2C4c4
DETAIL -4
MOUSE HOLES SPACING
MEASURE ON SKIN CHL
SCALE: 1/4
81205
261X0420
10
9

8 7

PREFORM ARCHITECTURE

	FRAME AREA	0° FIBER ANGLE MATL TYPE	0° FIBER ANGLE TOW SIZE	0° FIBER ANGLE %	±60° FIBER ANGL MATL TYPE	±60° FIBER ANGL TOW SIZE	±
LARGE MANDREL (96 CARRIERS 3 LAYERS)	CAP A		24K	50		6K	5
	WEB A		12K	33		6K	6
	CAP B		24K	50		6K	5
SMALL MANDREL (64 CARRIERS 3 LAYERS)	CAP B		24K	50		6K	5
	WEB B		12K	33		6K	6
	LEO		12K	33		6K	6
OVERBRAID (144 CARRIERS 3 LAYERS)	CAP A		24K	50		6K	5
	WEB A		12K	33		6K	6
	WEB B		12K	33		6K	6
	LEO		12K	33		6K	6

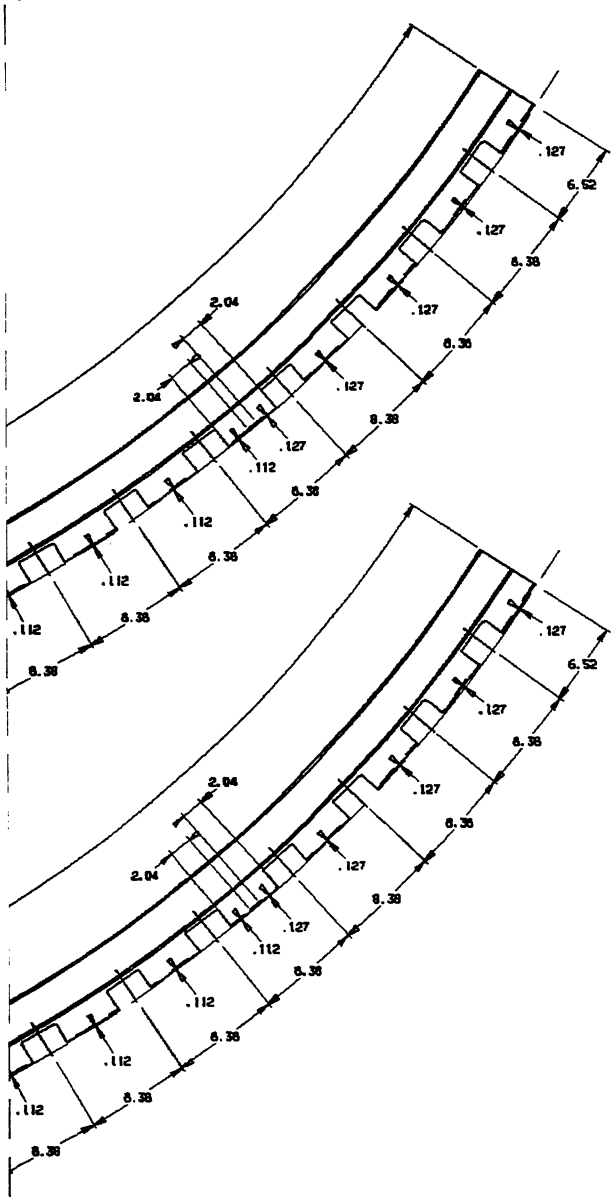

8 7

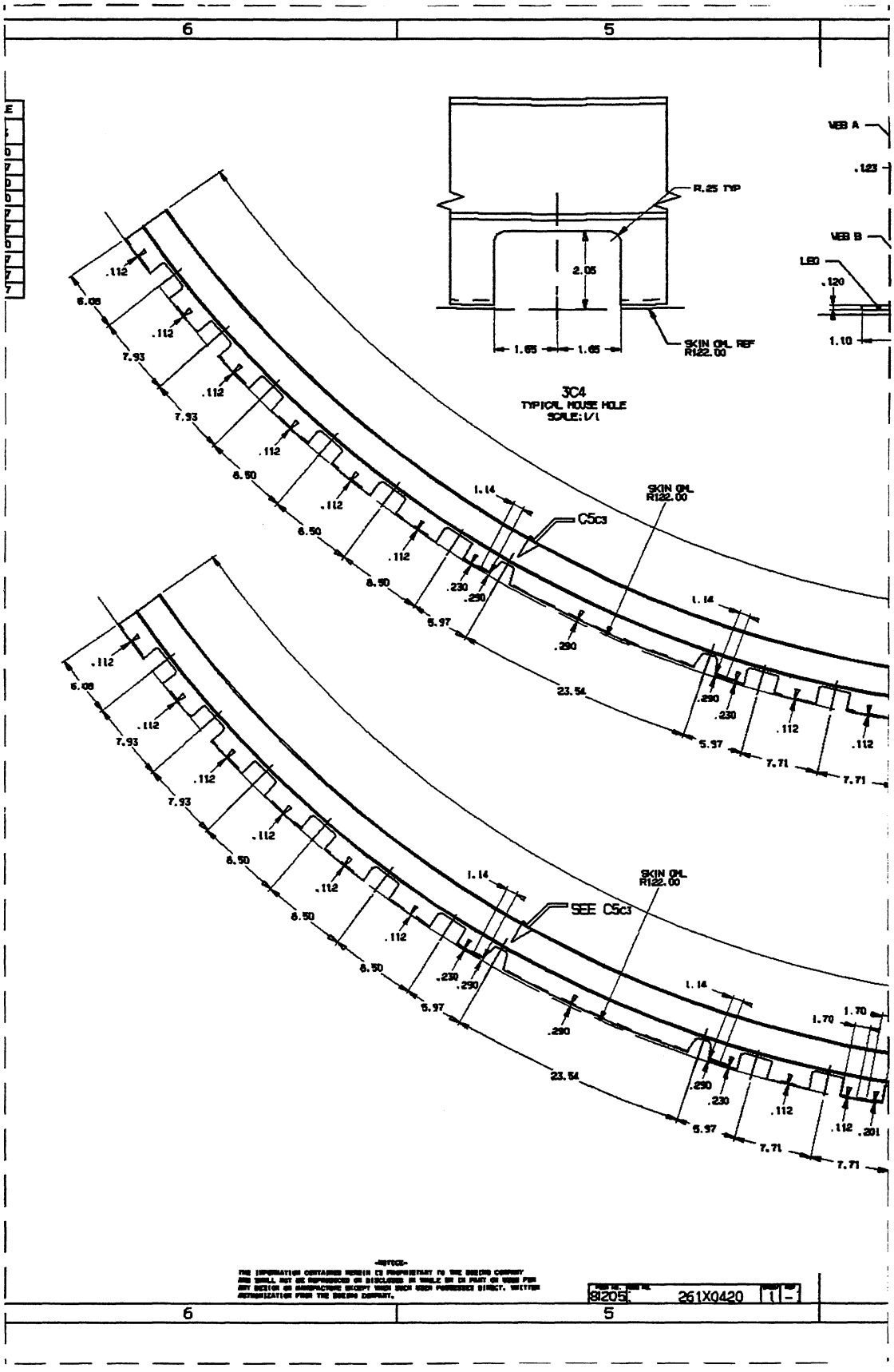

-NOTICE-
THE INFORMATION CONTAINED HEREIN IS PROPRIETARY TO THE BOEING COMPANY AND SHALL NOT BE REPRODUCED OR DISCLOSED IN WHOLE OR IN PART OR USED FOR ANY DESIGN OR MANUFACTURE EXCEPT WHEN SUCH USES PURSUANT DIRECT, WRITTEN AUTHORIZATION FROM THE BOEING COMPANY.

81205 261X0420 1 -

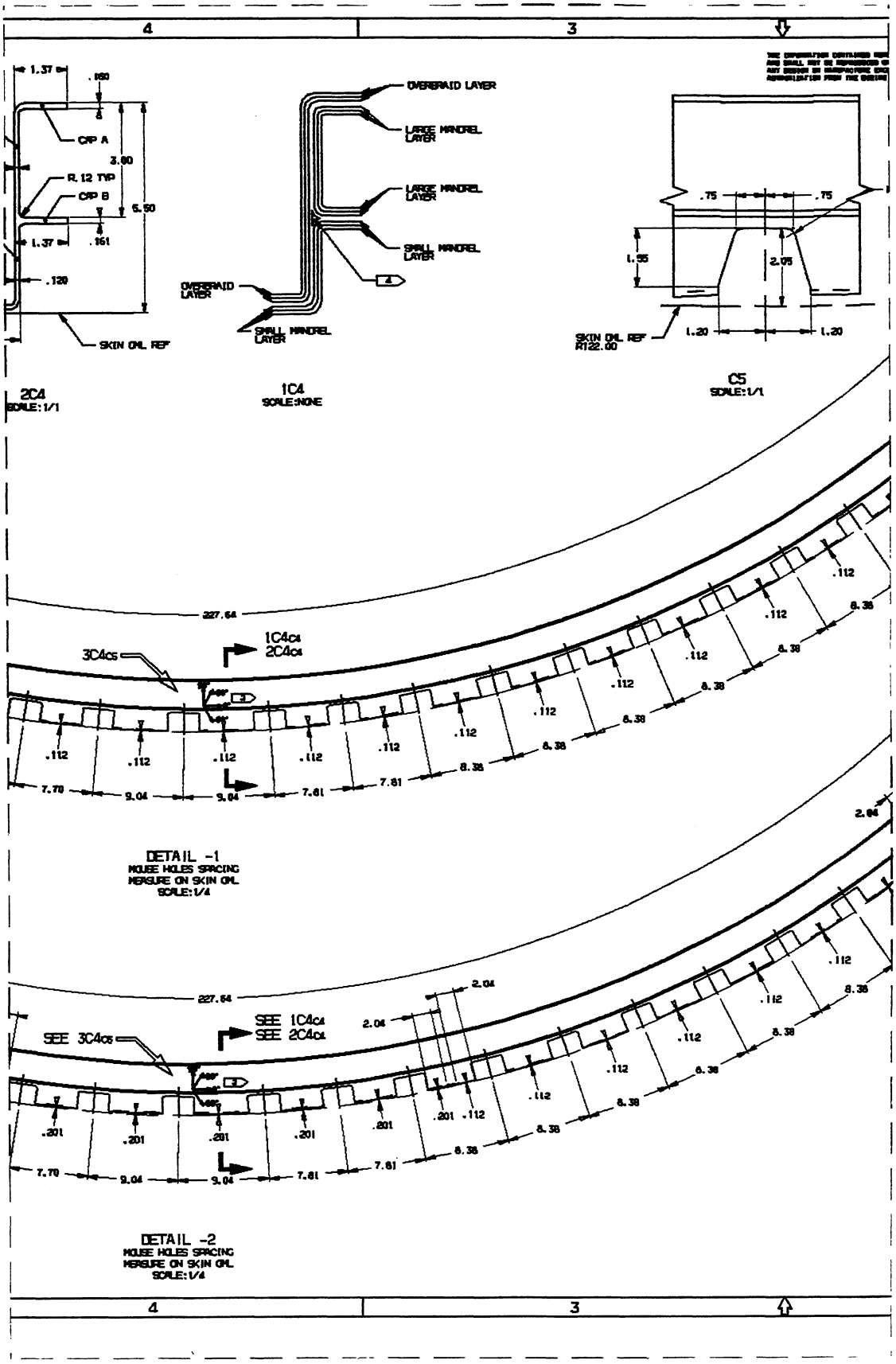
4
3
1.37
.050
CRP A
3.00
R.12 TYP
CRP B
5.50
1.37
.161
.120
SKIN OML REF
OVERBRAID LAYER
LARGE MANDREL LAYER
LARGE MANDREL LAYER
SMALL MANDREL LAYER
4
OVERBRAID LAYER
SMALL MANDREL LAYER
.75
.75
1.55
2.05
SKIN OML REF R122.00
1.20
1.20
2C4
SCALE: 1/1
1C4
SCALE:NONE
C5
SCALE: 1/1
227.64
3C4cs
1C4c4
2C4c4
.112
8.38
7.70
9.04
9.04
7.61
7.61
DETAIL -1
MOUSE HOLES SPACING
MEASURE ON SKIN OML
SCALE: 1/4
2.04
SEE 1C4c4
SEE 2C4c4
SEE 3C4cs
.201
DETAIL -2
MOUSE HOLES SPACING
MEASURE ON SKIN OML
SCALE: 1/4
4
3

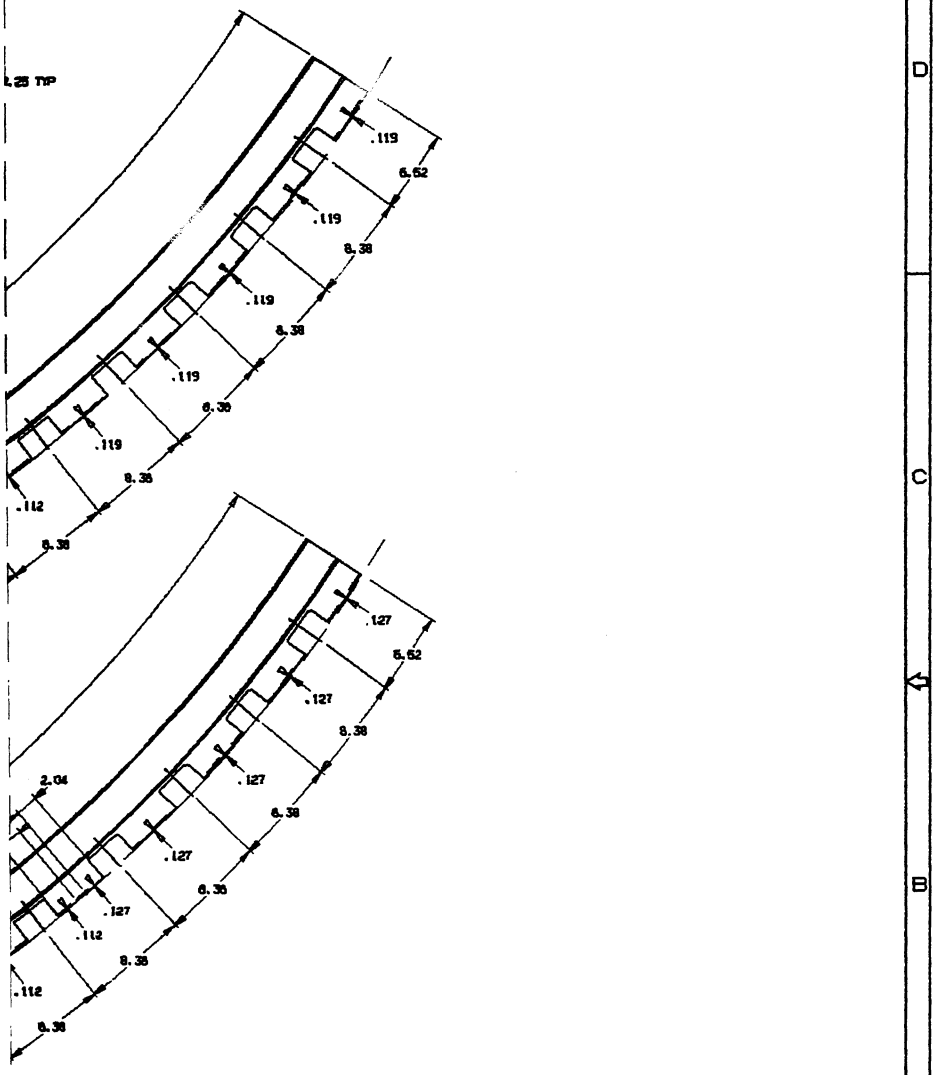
.25 TYP
.119
6.52
.119
8.38
.119
8.38
.119
8.38
.112
8.38
.127
6.52
.127
8.38
2.04
.127
8.38
.127
.127
8.38
.112
8.38
.112
8.38
CAD DRAWING
(NO DATASET RELEASED)
TEST ONLY
B-Y848
BOEING
COMPOSITE SKIN/STGR
FRAME DETAILS
(TEST ONLY)
J 81205
261X0420
261X0420

B-33

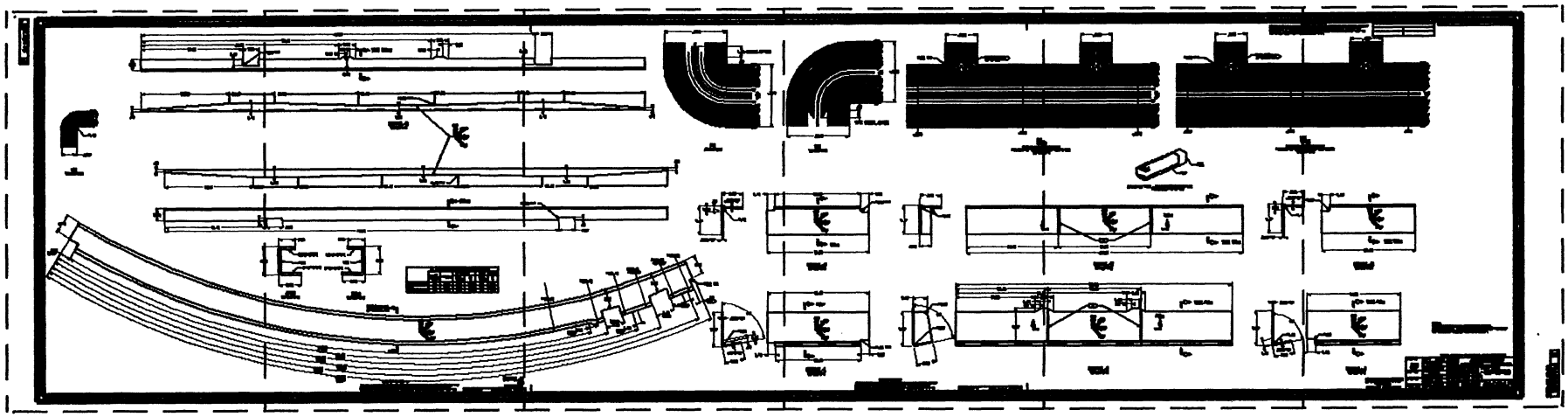

B-34 B-35 B-36 B-37 B-38 B-39

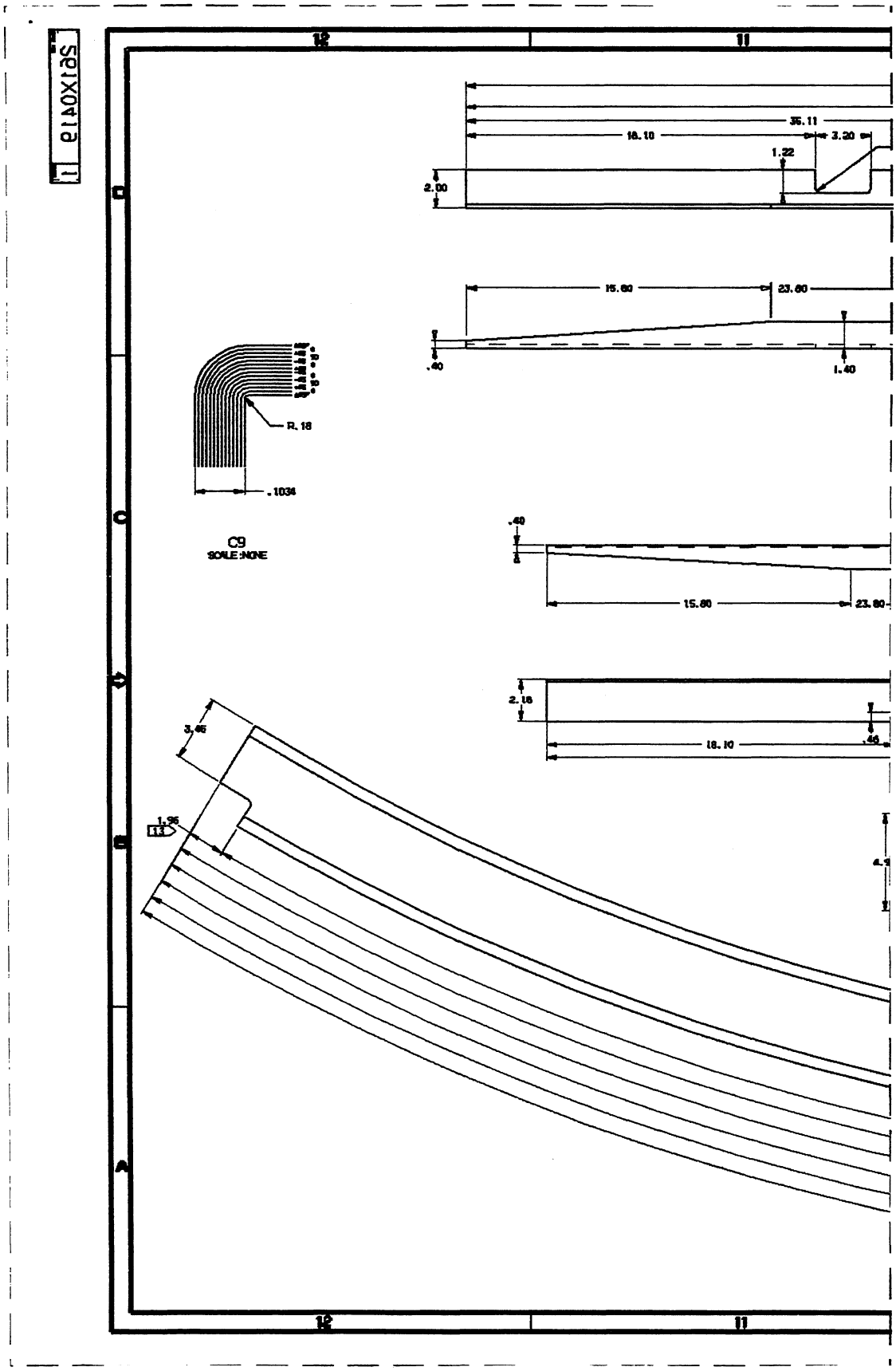
12
11
35.11
18.10
3.20
1.22
2.00
15.80
23.80
.40
1.40
R. 18
.1034
C9
SCALE:NONE
.40
15.80
23.80
2.18
18.10
.46
3.46
1.36
13

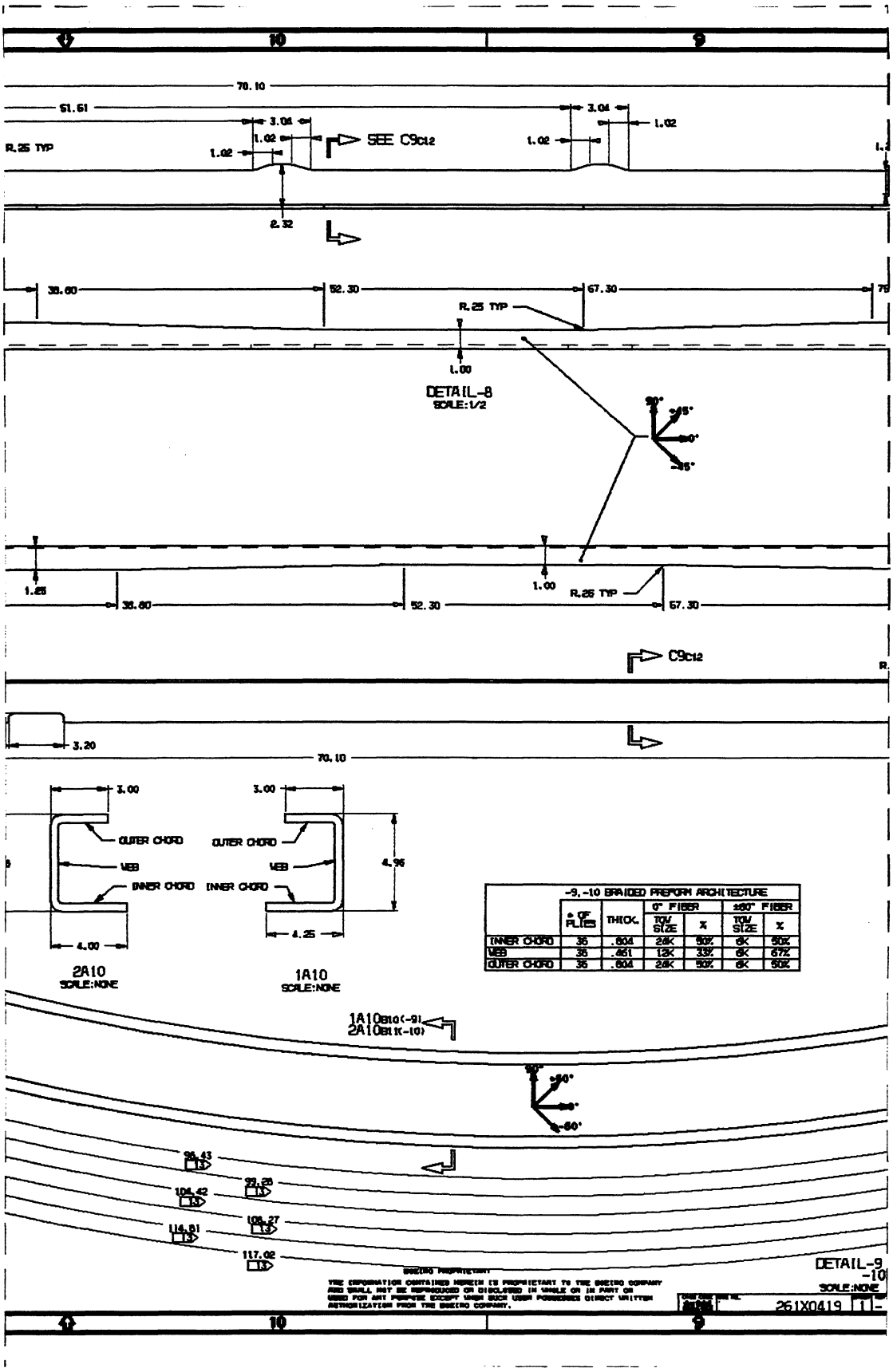

-9, -10 BRAIDED PREFORM ARCHITECTURE

	# OF PLIES	THICK.	0° FIBER		±60° FIBER	
			TOW SIZE	%	TOW SIZE	%
INNER CHORD	36	.604	24K	50%	6K	50%
WEB	36	.461	12K	33%	6K	67%
OUTER CHORD	36	.604	24K	50%	6K	50%

BOEING PROPRIETARY
THE INFORMATION CONTAINED HEREIN IS PROPRIETARY TO THE BOEING COMPANY AND SHALL NOT BE REPRODUCED OR DISCLOSED IN WHOLE OR IN PART OR USED FOR ANY PURPOSE EXCEPT WHEN SUCH USE POSSESSES DIRECT WRITTEN AUTHORIZATION FROM THE BOEING COMPANY.

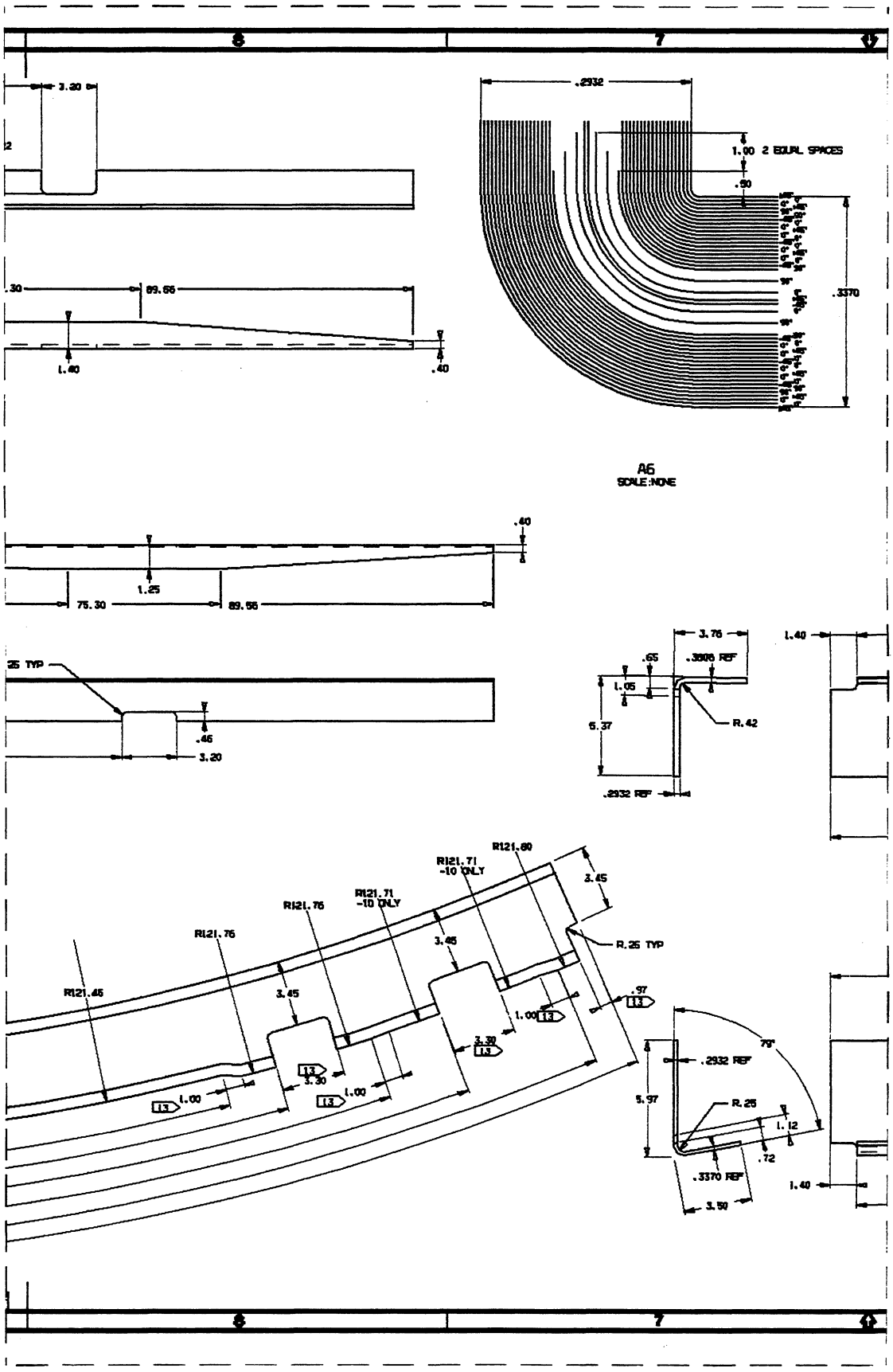
3.20
.2932
1.00 2 EQUAL SPACES
.50
.3370
.30
89.66
1.40
.40
A6
SCALE:NONE
.40
1.25
75.30
89.66
.25 TYP
.46
3.20
3.76
.65
.3906 REF
1.05
5.37
R.42
.2932 REF
1.40
R121.80
R121.71
-10 ONLY
R121.76
R121.71
-10 ONLY
R121.76
R121.46
3.45
3.45
R.25 TYP
.97
1.00
3.30
3.30
1.00
1.00
79°
.2932 REF
5.97
R.25
1.12
.72
.3370 REF
3.50
1.40

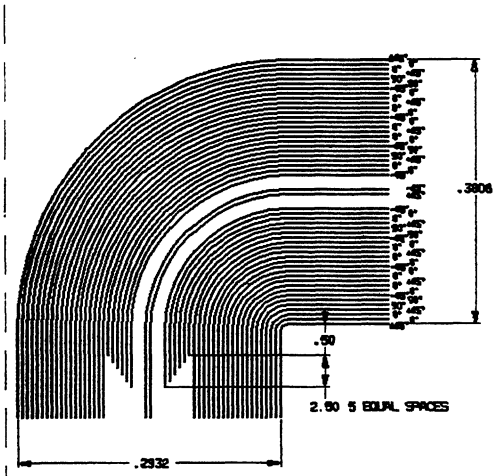

B6
SCALE:NONE

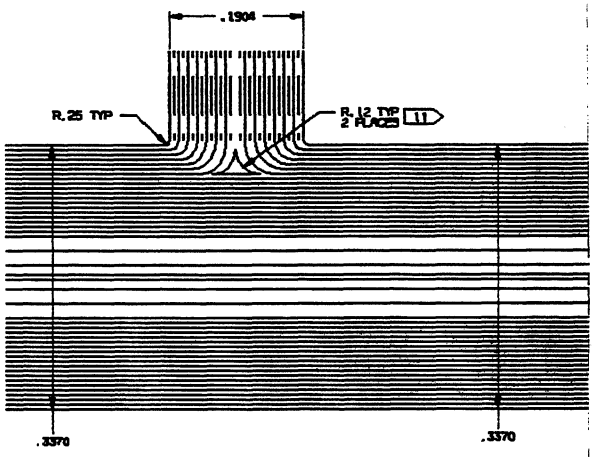

A3
(-2
DASHED LINES
FOLDED PLY EDGES
SCALE:

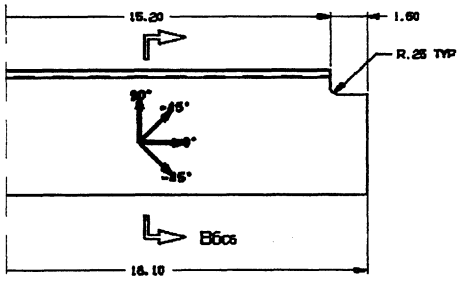

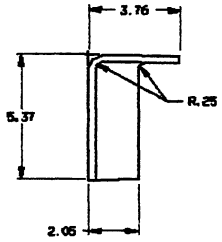

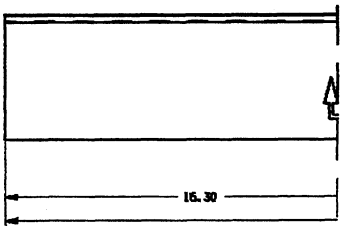

DETAIL-4
SCALE:NONE

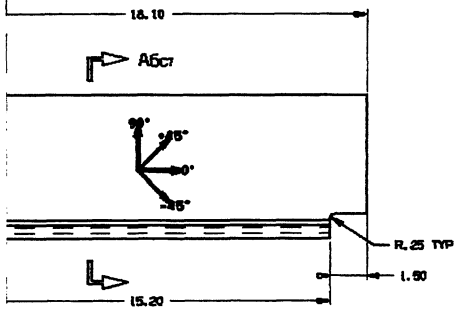

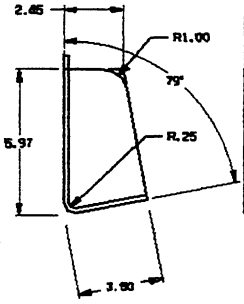

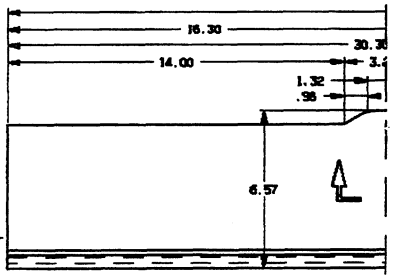

DETAIL-1
SCALE:NONE

THE INFORMATION CONTAINED HEREIN IS PROPRIETARY TO THE BOEING COMPANY AND SHALL NOT BE REPRODUCED OR DISCLOSED IN WHOLE OR IN PART OR USED FOR ANY PURPOSE EXCEPT WHEN SUCH USE HAS BEEN EXPRESSLY GIVEN WRITTEN AUTHORIZATION FROM THE BOEING COMPANY.

261X0419

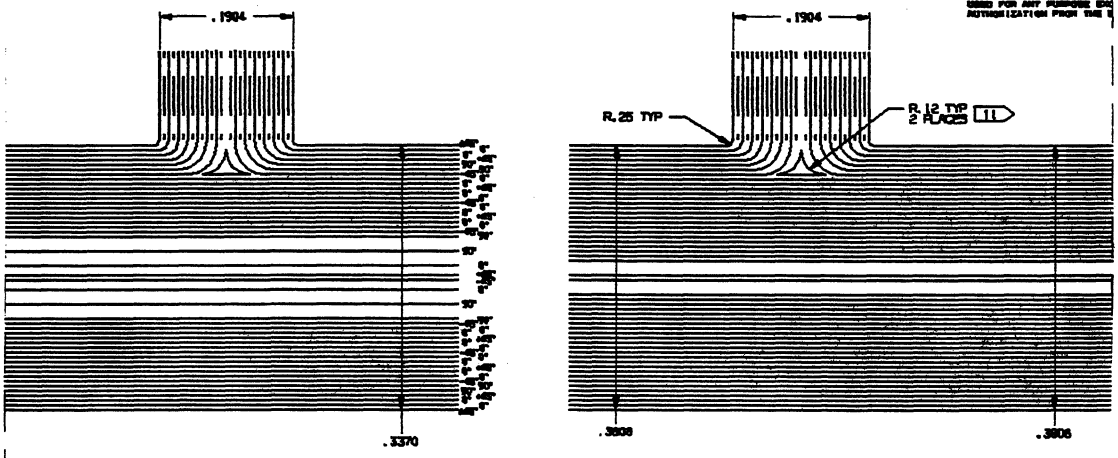

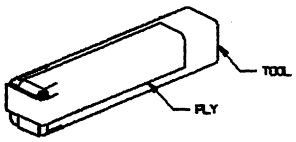

ISOMETRIC VIEW - FLY FOLDING OPERATION
FOR SILL FRAME TAB

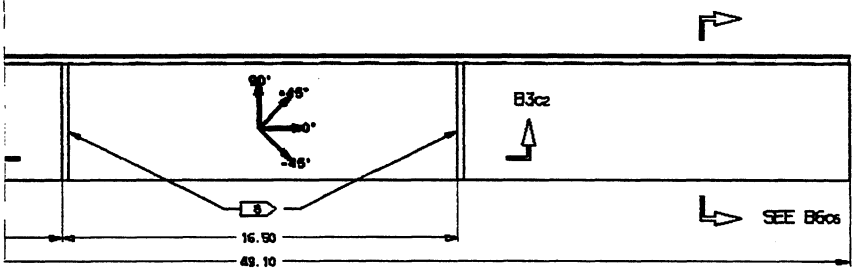

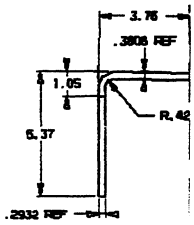

DETAIL-5
SCALE:NONE

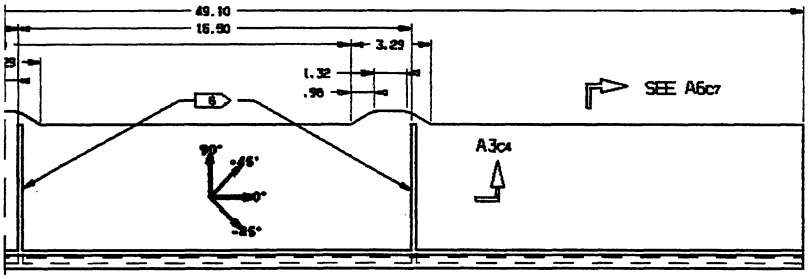

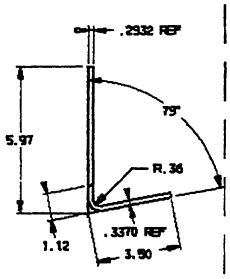

DETAIL-2
SCALE:NONE

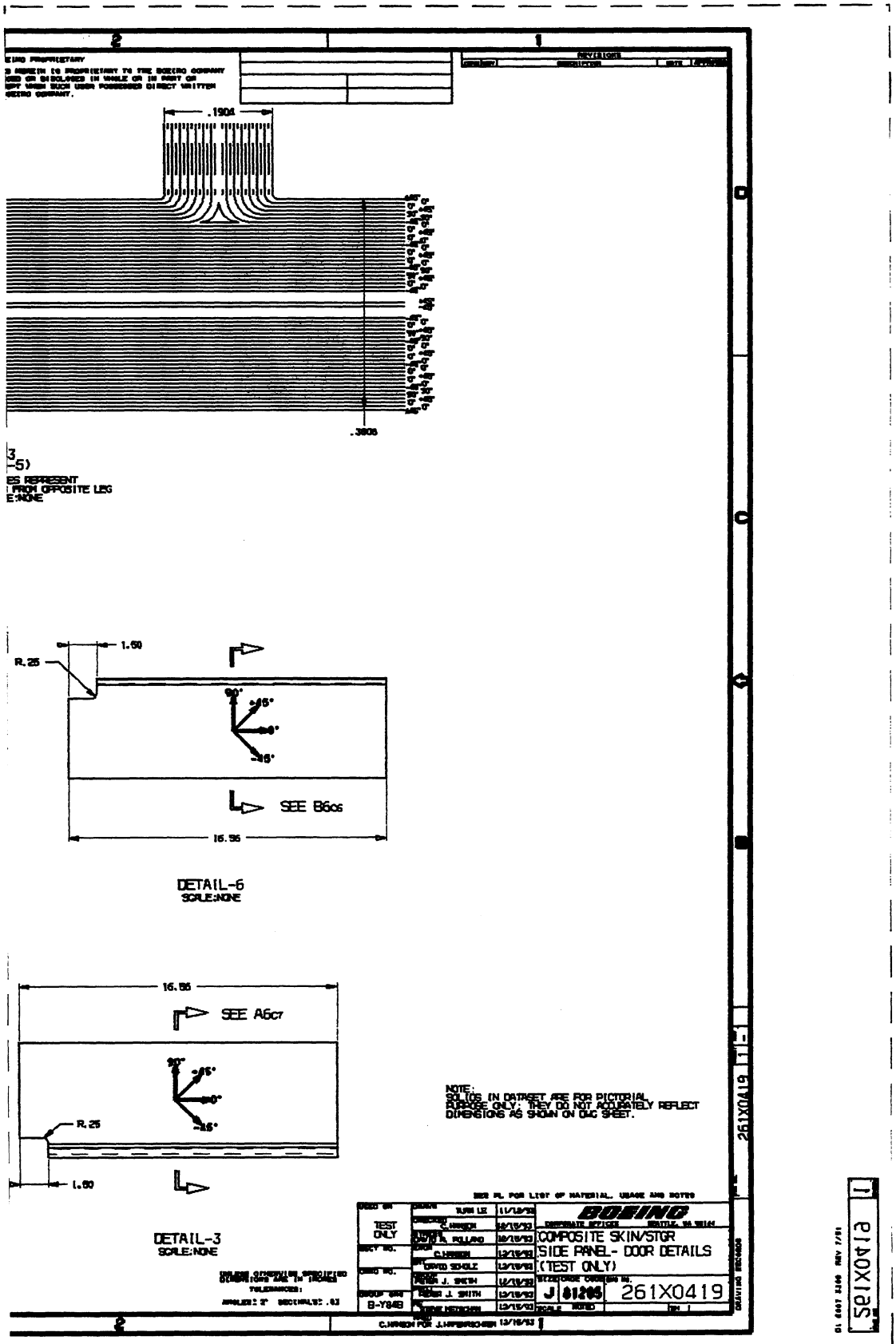

.1904
.3806
3
-5)
ES REPRESENT
FROM OPPOSITE LEG
E:NONE
1.60
R.25
90°
+45°
0°
-45°
SEE B6c6
16.56
DETAIL-6
SCALE:NONE
16.56
SEE A6c7
90°
+45°
0°
-45°
R.25
1.60
DETAIL-3
SCALE:NONE
NOTE:
SOLIDS IN DATASET ARE FOR PICTORIAL
PURPOSE ONLY; THEY DO NOT ACCURATELY REFLECT
DIMENSIONS AS SHOWN ON DWG SHEET.
BOEING
COMPOSITE SKIN/STGR
SIDE PANEL- DOOR DETAILS
(TEST ONLY)
TEST ONLY
B-Y848
J 81205
261X0419
261X0419

B-40

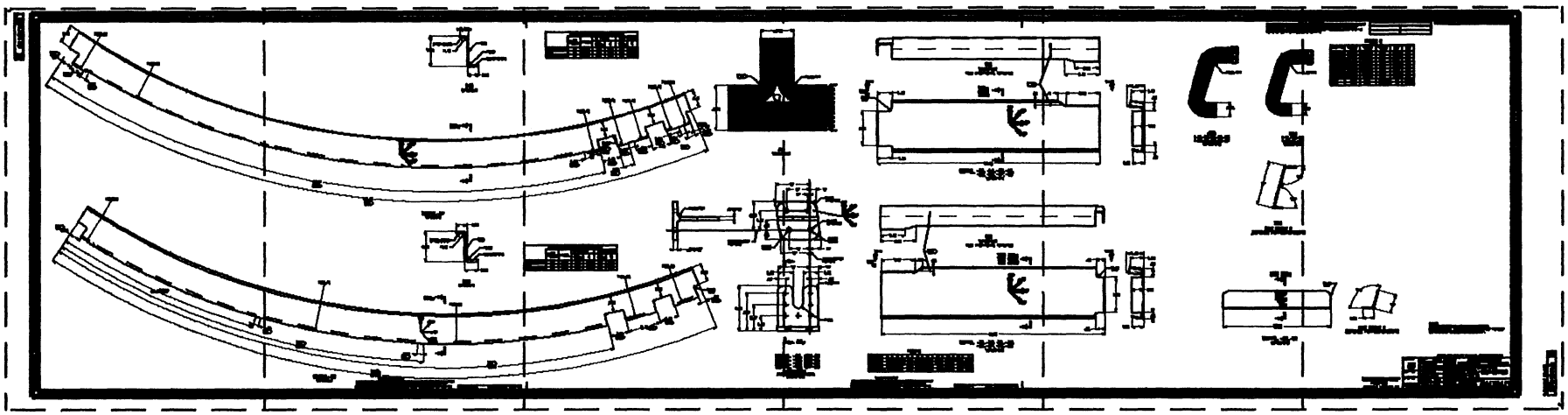

B-41 B-42 B-43 B-44 B-45 B-46

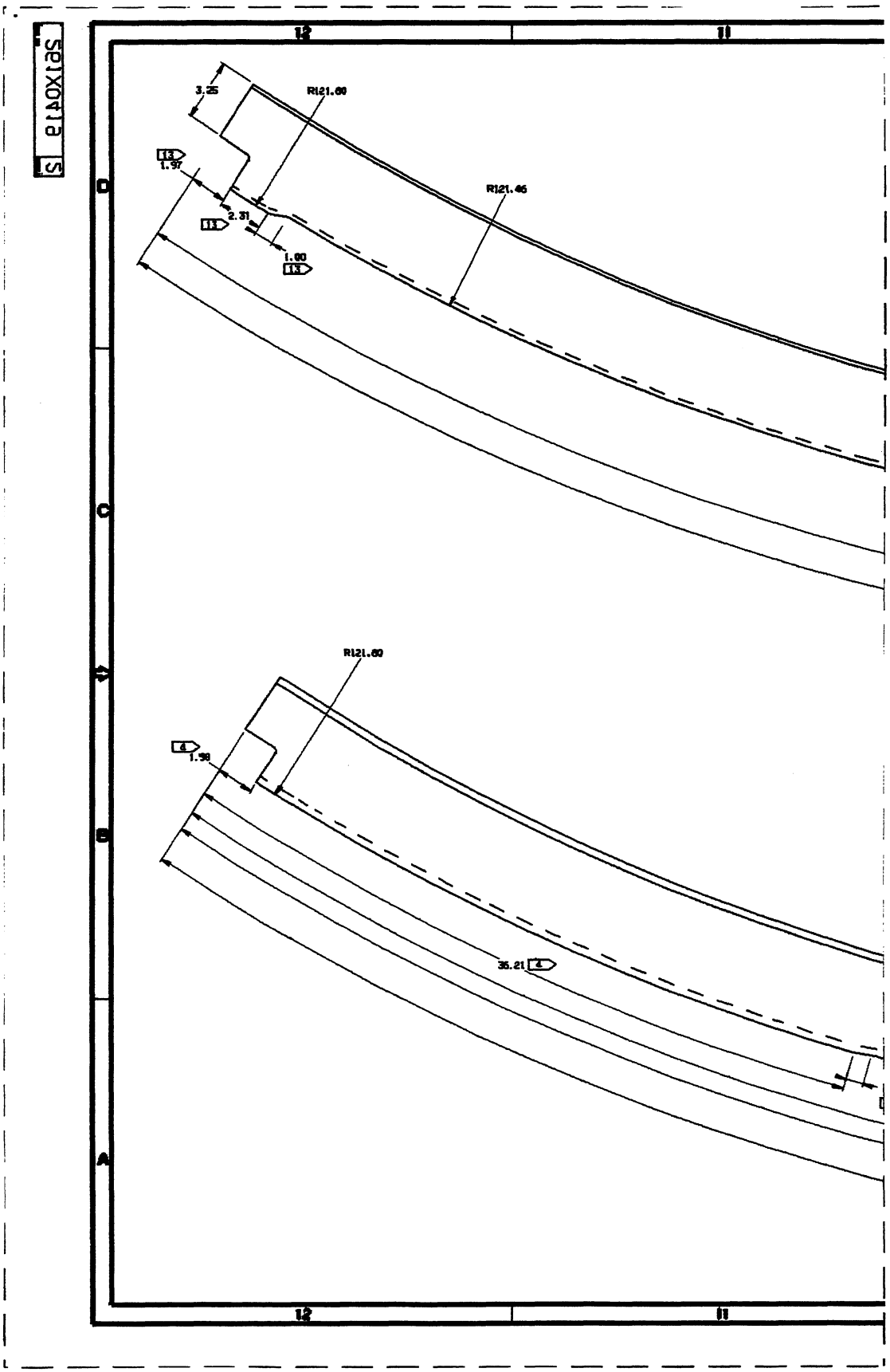

12
11
3.25
R121.60
13
1.97
2.31
13
1.00
13
R121.46
D
C
R121.60
4
1.98
B
35.21
4
A
12
11

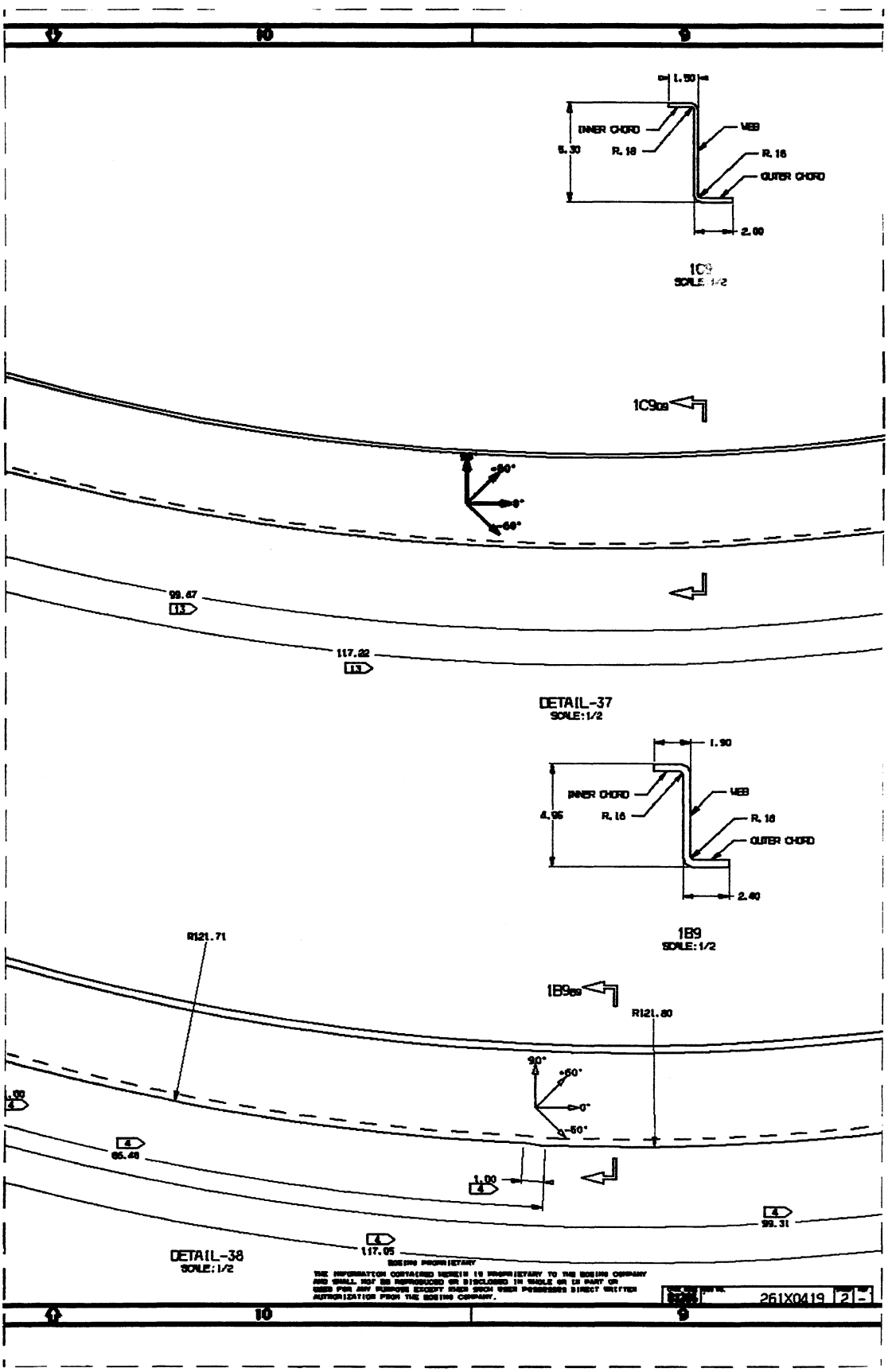

10
9
1.50
INNER CHORD
WEB
5.30
R.18
R.18
OUTER CHORD
2.00
1C9
SCALE: 1/2
1C9
99.47
13
117.22
13
DETAIL-37
SCALE: 1/2
1.90
INNER CHORD
WEB
4.95
R.18
R.18
OUTER CHORD
2.40
1B9
SCALE: 1/2
R121.71
1B9
R121.80
90°
+60°
0°
-60°
4
66.48
1.00
4
4
99.31
4
117.05
DETAIL-38
SCALE: 1/2
BOEING PROPRIETARY
261X0419
2

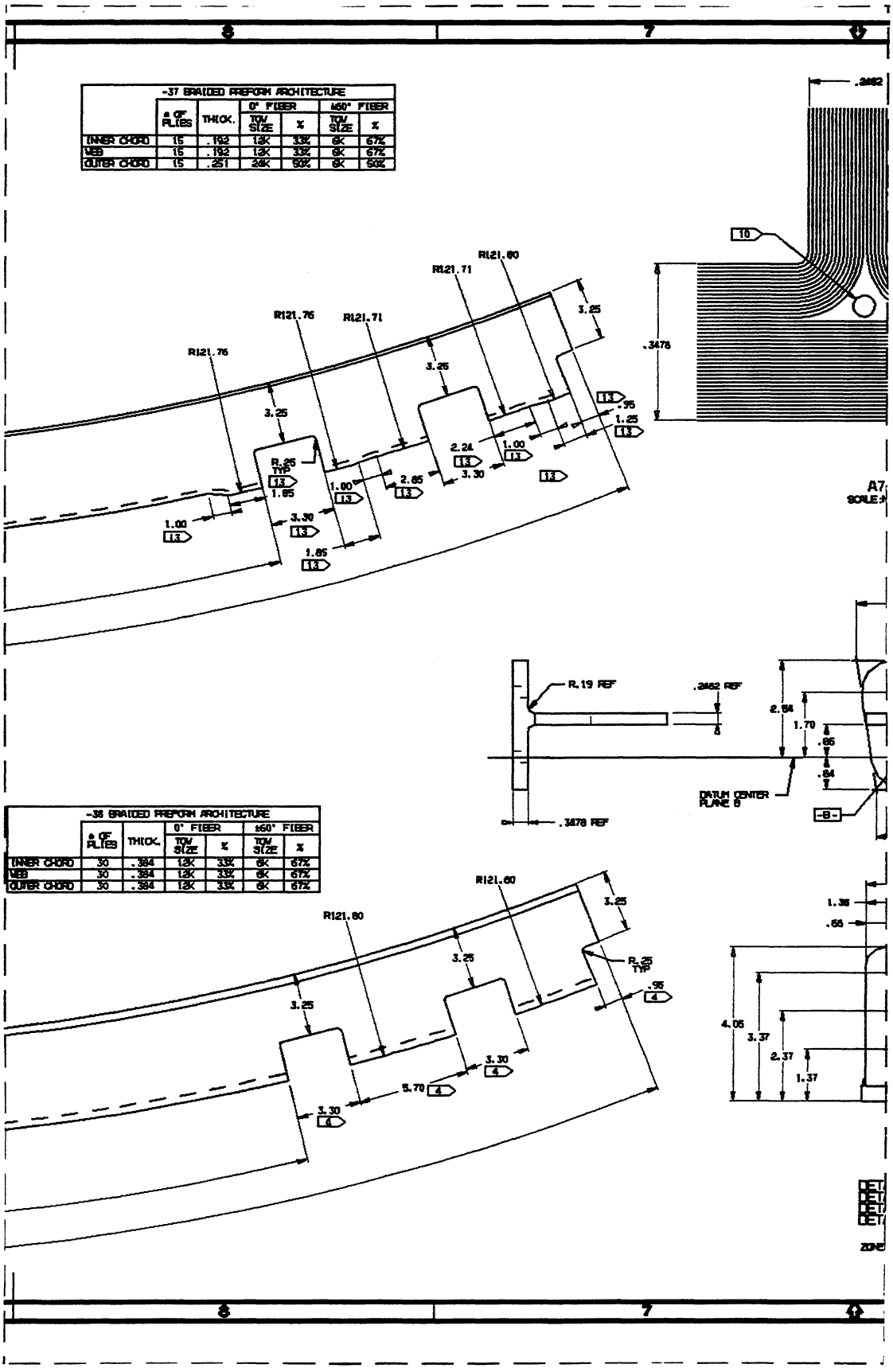

-37 BRAIDED PREFORM ARCHITECTURE						
	# OF PLIES	THICK.	0° FIBER		±60° FIBER	
			TOW SIZE	%	TOW SIZE	%
INNER CHORD	15	.192	12K	33%	6K	67%
WEB	15	.192	12K	33%	6K	67%
OUTER CHORD	15	.251	24K	50%	6K	50%

-38 BRAIDED PREFORM ARCHITECTURE						
	# OF PLIES	THICK.	0° FIBER		±60° FIBER	
			TOW SIZE	%	TOW SIZE	%
INNER CHORD	30	.384	12K	33%	6K	67%
WEB	30	.384	12K	33%	6K	67%
OUTER CHORD	30	.384	12K	33%	6K	67%

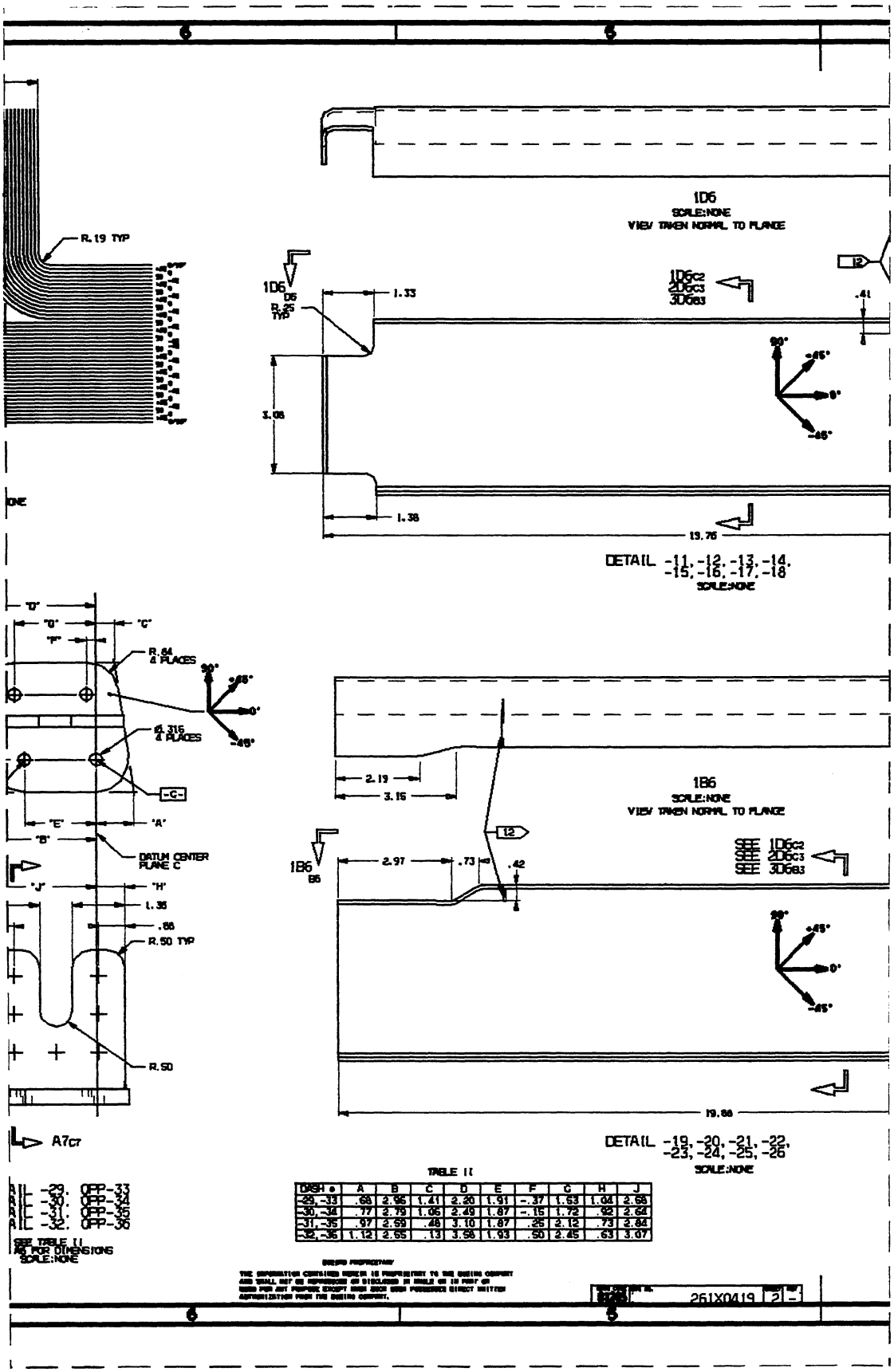

TABLE II

DASH #	A	B	C	D	E	F	G	H	J
-29,-33	.68	2.96	1.41	2.20	1.91	-.37	1.53	1.04	2.68
-30,-34	.77	2.79	1.06	2.49	1.87	-.15	1.72	.92	2.64
-31,-35	.97	2.59	.48	3.10	1.87	.25	2.12	.73	2.84
-32,-36	1.12	2.65	.13	3.56	1.93	.50	2.45	.63	3.07

THE INFORMATION CONTAINED HEREIN IS PROPRIETARY TO THE BOEING COMPANY AND SHALL NOT BE REPRODUCED OR DISCLOSED IN WHOLE OR IN PART OR USED FOR ANY PURPOSE EXCEPT THOSE FOR WHICH SUCH PERMISSION IS GRANTED BY WRITTEN AUTHORIZATION FROM THE BOEING COMPANY.

261X0419 2 -

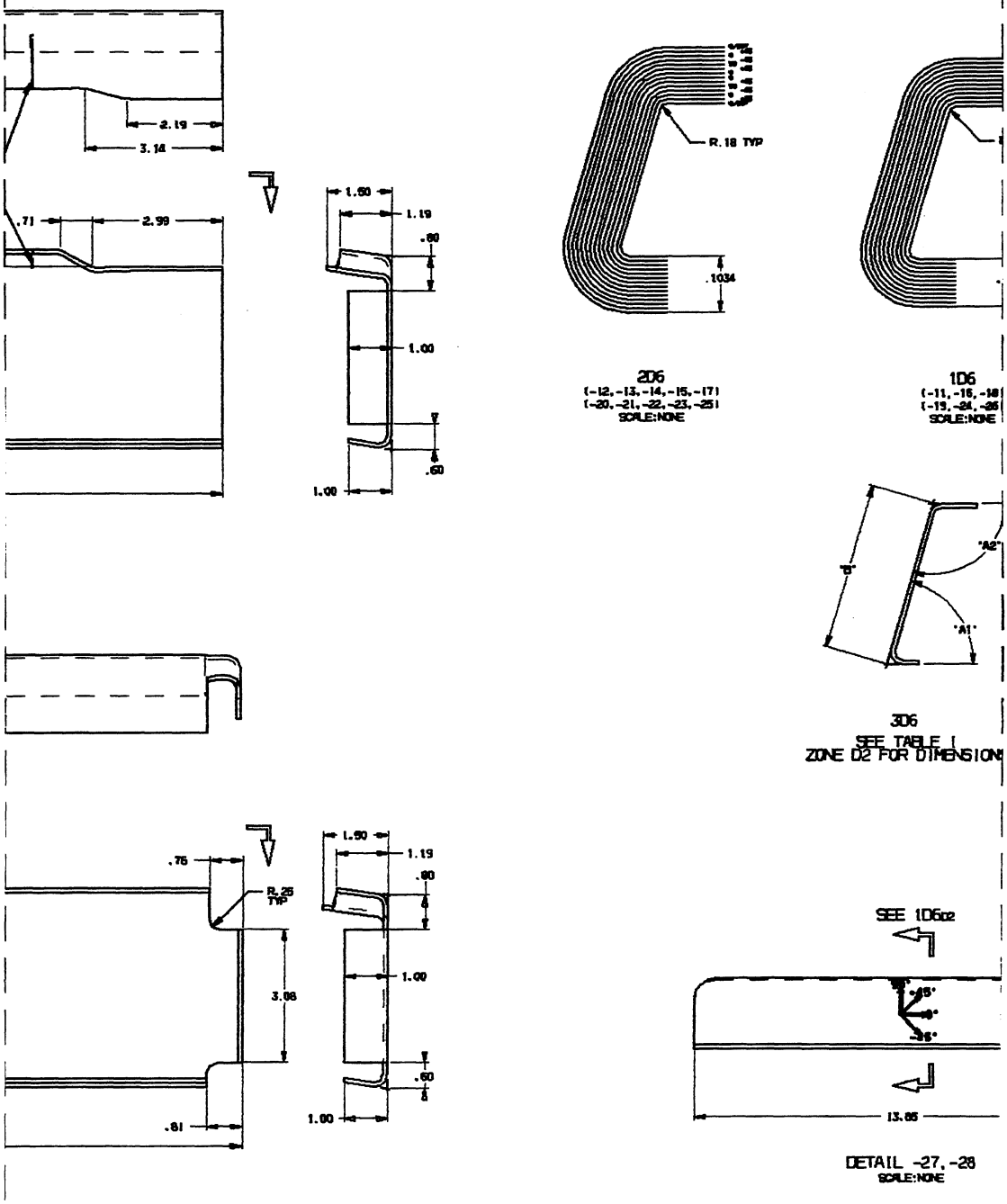
2.19
3.14
.71
2.99
1.50
1.19
.80
1.00
.60
1.00
R.18 TYP
.1034
2D6
(-12,-13,-14,-15,-17)
(-20,-21,-22,-23,-25)
SCALE:NONE
1D6
(-11,-16,-18
(-19,-24,-26
SCALE:NONE
"A2"
"B"
"A1"
3D6
SEE TABLE I
ZONE D2 FOR DIMENSION
.75
R.25
TYP
3.08
.81
1.50
1.19
.80
1.00
.60
1.00
SEE 1D6D2
.15"
13.65
DETAIL -27,-28
SCALE:NONE

TABLE I

DASH NO.	ANGLE "A1"	ANGLE "A2"	ANGLE "A3"	DIM "B"	DIM "C"
-11, -19	73.98°	106.04°	----	4.62	----
-12, -20	77.61°	102.39°	----	4.56	----
-13, -21	81.26°	98.74°	----	4.51	----
-14, -22	84.91°	95.09°	----	4.48	----
-15, -23	91.66°	68.14°	----	4.46	----
-16, -24	96.07°	61.93°	----	4.51	----
-17, -25	102.10°	77.90°	----	4.56	----
-18, -26	106.14°	73.86°	----	4.62	----
-27	----	----	94.65°	---	1.69
-28	----	----	67.74°	---	1.65

.18 TYP

R.50 TYP

"A3"

"C"

1.00

SEE TABLE I
ZONE D2 FOR DIMENSIONS

NOTE:
SOLIDS IN DATASET ARE FOR PICTORIAL PURPOSE ONLY; THEY DO NOT ACCURATELY REFLECT DIMENSIONS AS SHOWN ON DAC SHEET.

SEE PL FOR LIST OF MATERIAL, USAGE AND NOTES

DRAWN	TURN LE	11/19/92	BOEING
CHECKED	C.HANSON	12/18/92	
STRESS	DAVID R.ROLLINS	12/15/92	COMPOSITE SKIN/STGR
ENGR	C.HANSON	12/18/92	SIDE PANEL- DOOR DETAILS
MFG	DAVID SZALZ	12/18/92	(TEST ONLY)
QUAL	PETER J. SELH	12/15/92	
PD	PETER J. SELH	12/18/92	J 81205 261X0419
ENGR APP	STEVE HEDRICK	12/15/92	TOTALS NOTED

USED ON: TEST ONLY
ENGR REL NO.:
DRAWING NO.: B-Y848

UNLESS OTHERWISE SPECIFIED DIMENSIONS ARE IN INCHES
TOLERANCES:
ANGLES: ± .5° DECIMALS: ± .03

C.HANSON FOR J.HARRINGTON 12/15/92

261X0419 2 1

SHEET 1 OF 1

B-47

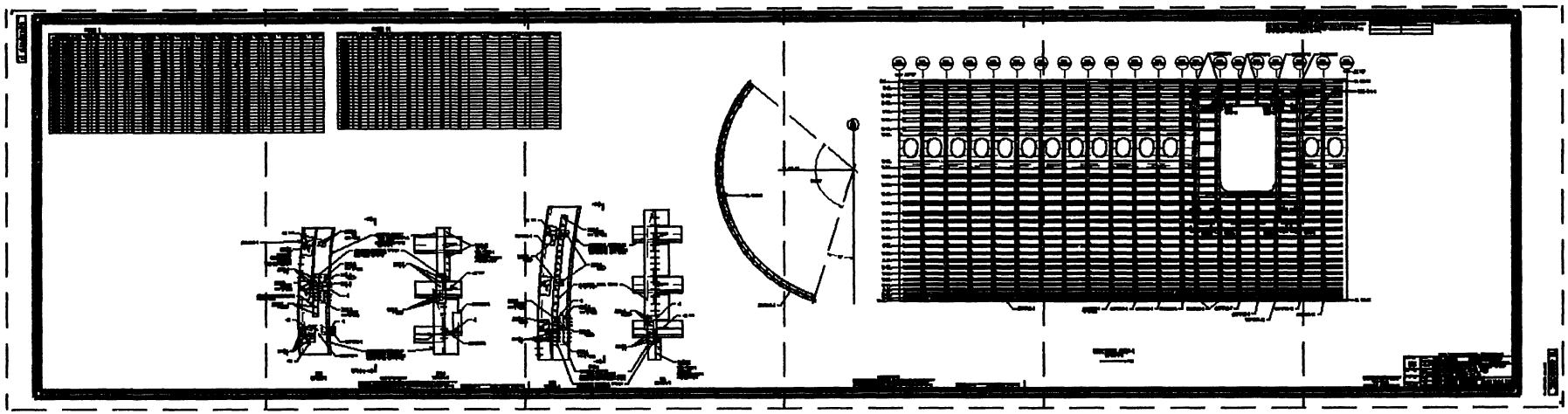

B-48 B-49 B-50 B-51 B-52 B-53

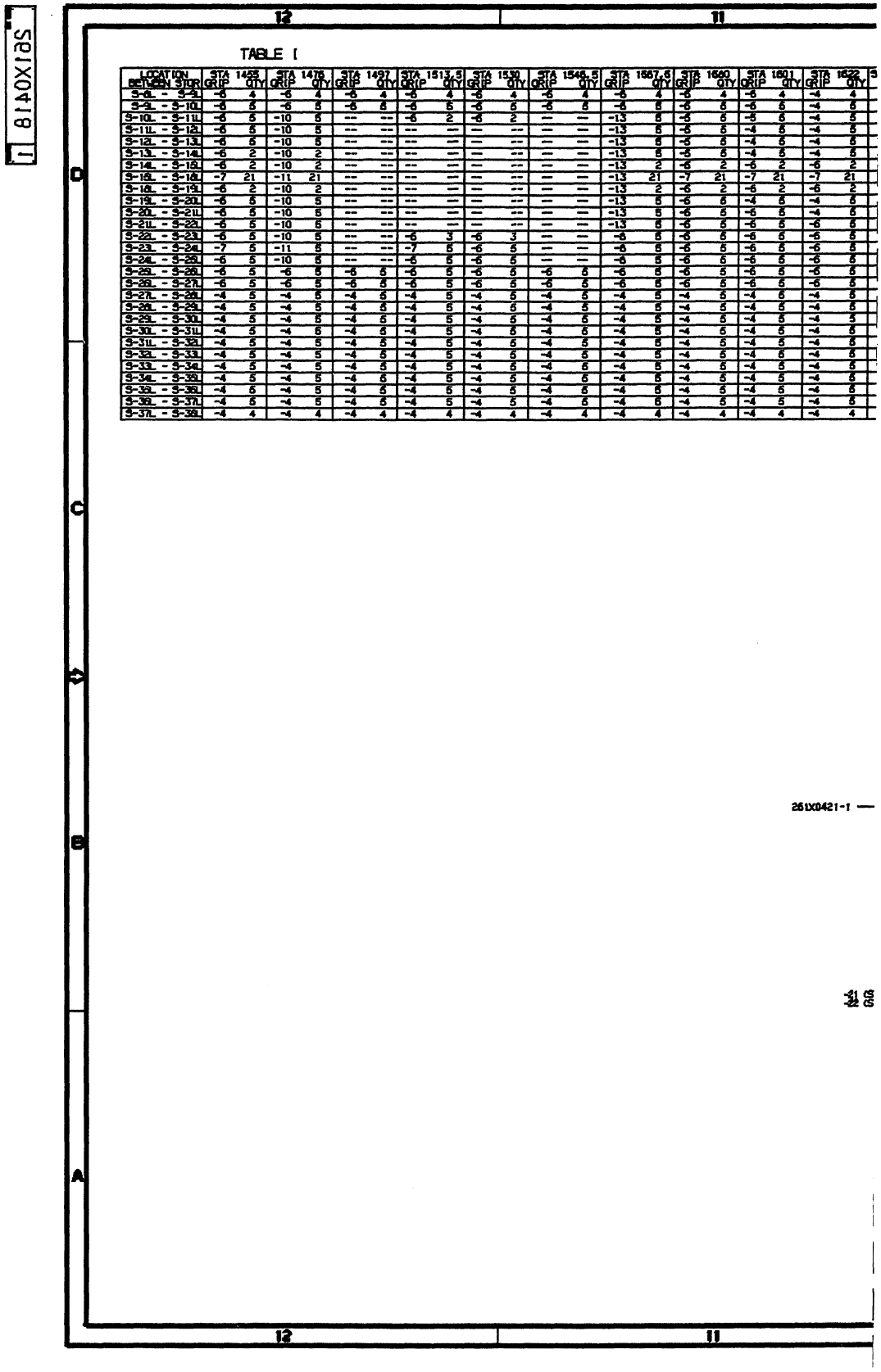

LOCATION BETWEEN STOR	STA 1458 GRIP	STA 1458 QTY	STA 1476 GRIP	STA 1476 QTY	STA 1497 GRIP	STA 1497 QTY	STA 1513.5 GRIP	STA 1513.5 QTY	STA 1530 GRIP	STA 1530 QTY	STA 1546.5 GRIP	STA 1546.5 QTY	STA 1567.6 GRIP	STA 1567.6 QTY	STA 1590 GRIP	STA 1590 QTY	STA 1601 GRIP	STA 1601 QTY	STA 1622 GRIP	STA 1622 QTY
S-9L - S-9J	-6	4	-6	4	-6	4	-6	4	-6	4	-6	4	-6	4	-6	4	-6	4	-4	4
S-9J - S-10J	-6	5	-6	5	-6	5	-6	5	-6	5	-6	5	-6	5	-6	5	-6	5	-4	5
S-10L - S-11L	-6	5	-10	5	---	---	-6	2	-6	2	—	—	-13	5	-6	5	-5	5	-4	5
S-11L - S-12L	-6	5	-10	5	---	---	---	—	—	—	—	—	-13	5	-6	5	-4	5	-4	5
S-12L - S-13L	-6	5	-10	5	---	---	---	—	—	—	—	—	-13	5	-6	5	-4	5	-4	5
S-13L - S-14L	-6	2	-10	2	---	---	---	—	—	—	—	—	-13	5	-6	5	-4	5	-4	5
S-14L - S-15L	-6	2	-10	2	---	---	---	—	—	—	—	—	-13	2	-6	2	-6	2	-6	2
S-15L - S-16L	-7	21	-11	21	---	---	---	—	—	—	—	—	-13	21	-7	21	-7	21	-7	21
S-16L - S-19L	-6	2	-10	2	---	---	---	—	—	—	—	—	-13	2	-6	2	-6	2	-6	2
S-19L - S-20L	-6	5	-10	5	---	---	---	—	—	—	—	—	-13	5	-6	5	-4	5	-4	5
S-20L - S-21L	-6	5	-10	5	---	---	---	—	—	—	—	—	-13	5	-6	5	-6	5	-4	5
S-21L - S-22L	-6	5	-10	5	---	---	---	—	—	—	—	—	-13	5	-6	5	-6	5	-6	5
S-22L - S-23L	-6	5	-10	5	---	---	-6	3	-6	3	—	—	-6	5	-6	5	-6	5	-6	5
S-23L - S-24L	-7	5	-11	5	---	---	-7	5	-6	5	—	—	-6	5	-6	5	-6	5	-6	5
S-24L - S-25L	-6	5	-10	5	---	---	-6	5	-6	5	—	—	-6	5	-6	5	-6	5	-6	5
S-25L - S-26L	-6	5	-6	5	-6	5	-6	5	-6	5	-6	5	-6	5	-6	5	-6	5	-6	5
S-26L - S-27L	-6	5	-6	5	-6	5	-6	5	-6	5	-6	5	-6	5	-6	5	-6	5	-6	5
S-27L - S-28L	-4	5	-4	5	-4	5	-4	5	-4	5	-4	5	-4	5	-4	5	-4	5	-4	5
S-28L - S-29L	-4	5	-4	5	-4	5	-4	5	-4	5	-4	5	-4	5	-4	5	-4	5	-4	5
S-29L - S-30L	-4	5	-4	5	-4	5	-4	5	-4	5	-4	5	-4	5	-4	5	-4	5	-4	5
S-30L - S-31L	-4	5	-4	5	-4	5	-4	5	-4	5	-4	5	-4	5	-4	5	-4	5	-4	5
S-31L - S-32L	-4	5	-4	5	-4	5	-4	5	-4	5	-4	5	-4	5	-4	5	-4	5	-4	5
S-32L - S-33L	-4	5	-4	5	-4	5	-4	5	-4	5	-4	5	-4	5	-4	5	-4	5	-4	5
S-33L - S-34L	-4	5	-4	5	-4	5	-4	5	-4	5	-4	5	-4	5	-4	5	-4	5	-4	5
S-34L - S-35L	-4	5	-4	5	-4	5	-4	5	-4	5	-4	5	-4	5	-4	5	-4	5	-4	5
S-35L - S-36L	-4	5	-4	5	-4	5	-4	5	-4	5	-4	5	-4	5	-4	5	-4	5	-4	5
S-36L - S-37L	-4	5	-4	5	-4	5	-4	5	-4	5	-4	5	-4	5	-4	5	-4	5	-4	5
S-37L - S-38L	-4	4	-4	4	-4	4	-4	4	-4	4	-4	4	-4	4	-4	4	-4	4	-4	4

TABLE II

STA1643 - STA1727		STA1749 - STA1811	
GRIP	QTY	GRIP	QTY
-4	4	-4	4
-4	5	-4	5
-4	5	-4	5
-4	5	-4	5
-4	5	-4	5
-4	5	-4	5
-6	2	-6	2
-7	21	-7	21
-6	2	-6	2
-4	5	-4	5
-4	5	-4	5
-4	5	-4	5
-4	5	-4	5
-4	5	-4	5
-4	5	-4	5
-4	5	-4	5
-4	5	-4	5
-4	5	-4	5
-4	5	-4	5
-4	5	-4	5
-4	5	-4	5
-4	5	-4	5
-4	5	-4	5
-4	5	-4	5
-4	5	-4	5
-4	5	-4	5
-4	5	-4	5
-4	5	-4	5
-4	5	-4	5
-4	5	-4	5
-4	4	-4	4

STRINGER	STA 1455	STA 1476	STA 1497	STA 1613.8	STA 1630	STA 1546.8	STA 1567.8	STA1580 - STA1622	STA1643 - STA1
	GRIP	GRIP	GRIP	GRIP	GRIP	GRIP	GRIP	GRIP	GRIP
S-9L	-4	-4	-4	-4	-4	-4	-4	-4	-4
S-10L	-4	-4	-4	-4	-4	-4	-4	-4	-4
S-11L	-3	-5	—	—	—	—	-6	-4	-4
S-12L	-3	-5	—	—	—	—	-6	-4	-4
S-13L	-3	-5	—	—	—	—	-6	-4	-4
S-14L	-3	-5	—	—	—	—	-6	-4	-4
S-15L	-5	-7	—	—	—	—	-7	-5	-5
S-16L	-5	-7	—	—	—	—	-7	-5	-5
S-19L	-3	-5	—	—	—	—	-6	-4	-4
S-20L	-3	-5	—	—	—	—	-6	-4	-4
S-21L	-3	-5	—	—	—	—	-6	-4	-4
S-22L	-3	-5	—	—	—	—	-6	-4	-4
S-23L	-6	-6	-6	-6	-6	-6	-6	-4	-4
S-24L	-6	-6	-6	-6	-6	-6	-6	-4	-4
S-25L	-4	-4	-4	-4	-4	-4	-4	-4	-4
S-26L	-4	-4	-4	-4	-4	-4	-4	-4	-4
S-27L	-4	-4	-4	-4	-4	-4	-4	-4	-4
S-28L	-4	-4	-4	-4	-4	-4	-4	-4	-4
S-29L	-4	-4	-4	-4	-4	-4	-4	-4	-4
S-30L	-4	-4	-4	-4	-4	-4	-4	-4	-4
S-31L	-4	-4	-4	-4	-4	-4	-4	-4	-4
S-32L	-4	-4	-4	-4	-4	-4	-4	-4	-4
S-33L	-4	-4	-4	-4	-4	-4	-4	-4	-4
S-34L	-4	-4	-6	-6	-6	-6	-6	-6	-6
S-35L	-4	-4	-6	-6	-6	-6	-6	-6	-6
S-36L	-4	-4	-6	-6	-6	-6	-6	-6	-6
S-37L	-4	-4	-6	-6	-6	-6	-6	-6	-6

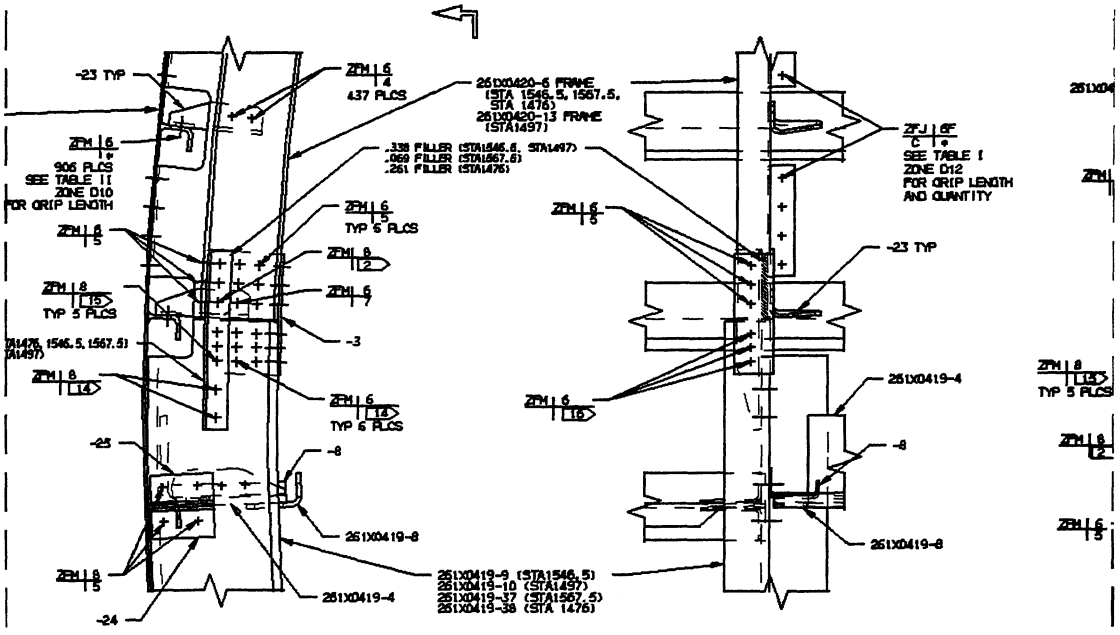

BOEING PROPRIETARY

THE INFORMATION CONTAINED HEREIN IS PROPRIETARY TO THE BOEING COMPANY AND SHALL NOT BE REPRODUCED OR DISCLOSED IN WHOLE OR IN PART OR USED FOR ANY PURPOSE EXCEPT WHEN SUCH USER POSSESSES DIRECT WRITTEN AUTHORIZATION FROM THE BOEING COMPANY.

SIZE	DRAWING NO.	SHEET
D	261X0418	1

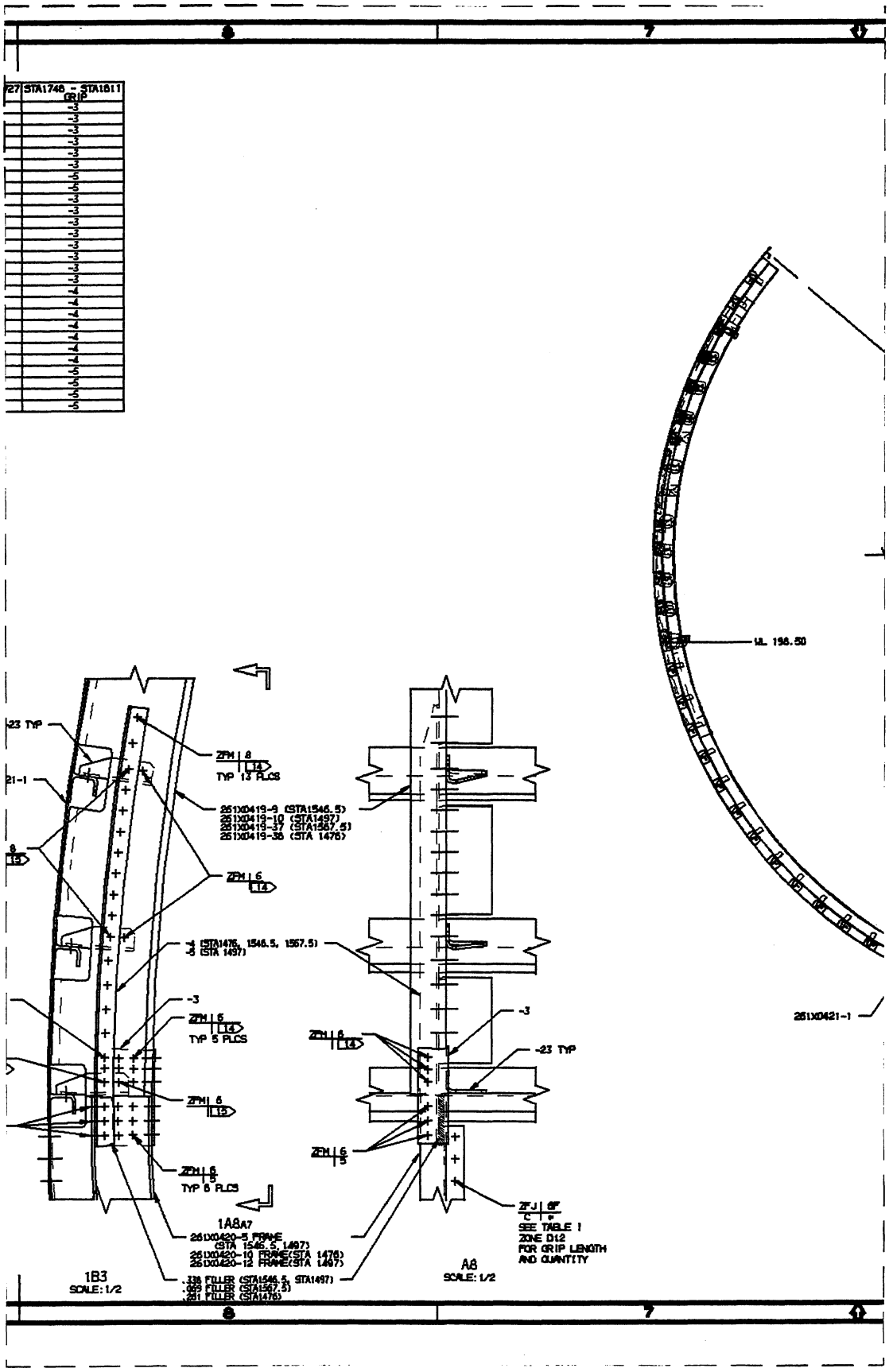

STA1748 - STA1811
GRIP
-3
-3
-3
-3
-3
-3
-5
-5
-3
-3
-3
-3
-3
-3
-3
-3
-4
-4
-4
-4
-4
-4
-4
-5
-5
-5
-5
WL 198.50
261X0421-1
-23 TYP
21-1
ZFM 8
TYP 13 PLCS
261X0419-9 (STA1546.5)
261X0419-10 (STA1497)
261X0419-37 (STA1567.5)
261X0419-38 (STA 1476)
ZFM 6
-4 (STA1476, 1546.5, 1567.5)
-5 (STA 1497)
-3
ZFM 6
TYP 5 PLCS
ZFM 6
ZFM 6
TYP 6 PLCS
1A8A7
261X0420-5 FRAME
(STA 1546.5, 1497)
261X0420-10 FRAME(STA 1476)
261X0420-12 FRAME(STA 1497)
.338 FILLER (STA1546.5, STA1497)
.069 FILLER (STA1567.5)
.261 FILLER (STA1476)
1B3
SCALE: 1/2
ZFM 6
-3
-23 TYP
ZFM 6
ZFJ 6F
SEE TABLE 1
ZONE D12
FOR GRIP LENGTH
AND QUANTITY
A8
SCALE: 1/2

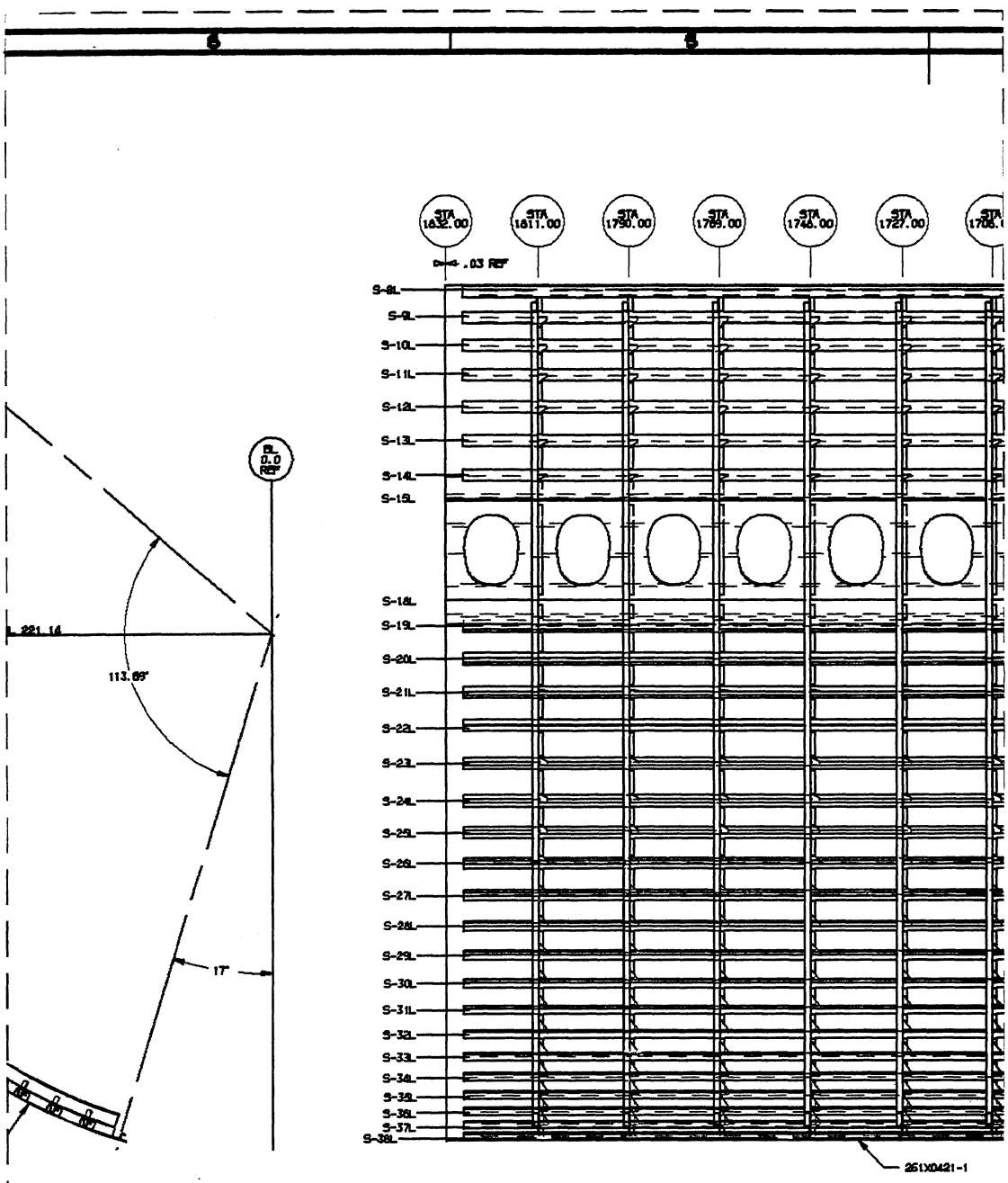

THE INFORMATION CONTAINED HEREIN IS PROPRIETARY TO THE BOEING COMPANY AND SHALL NOT BE REPRODUCED OR DISCLOSED IN WHOLE OR IN PART OR USED FOR ANY PURPOSE EXCEPT UNDER SUCH USER AGREEMENT DIRECT WRITTEN AUTHORIZATION FROM THE BOEING COMPANY.

261X0418 1 -

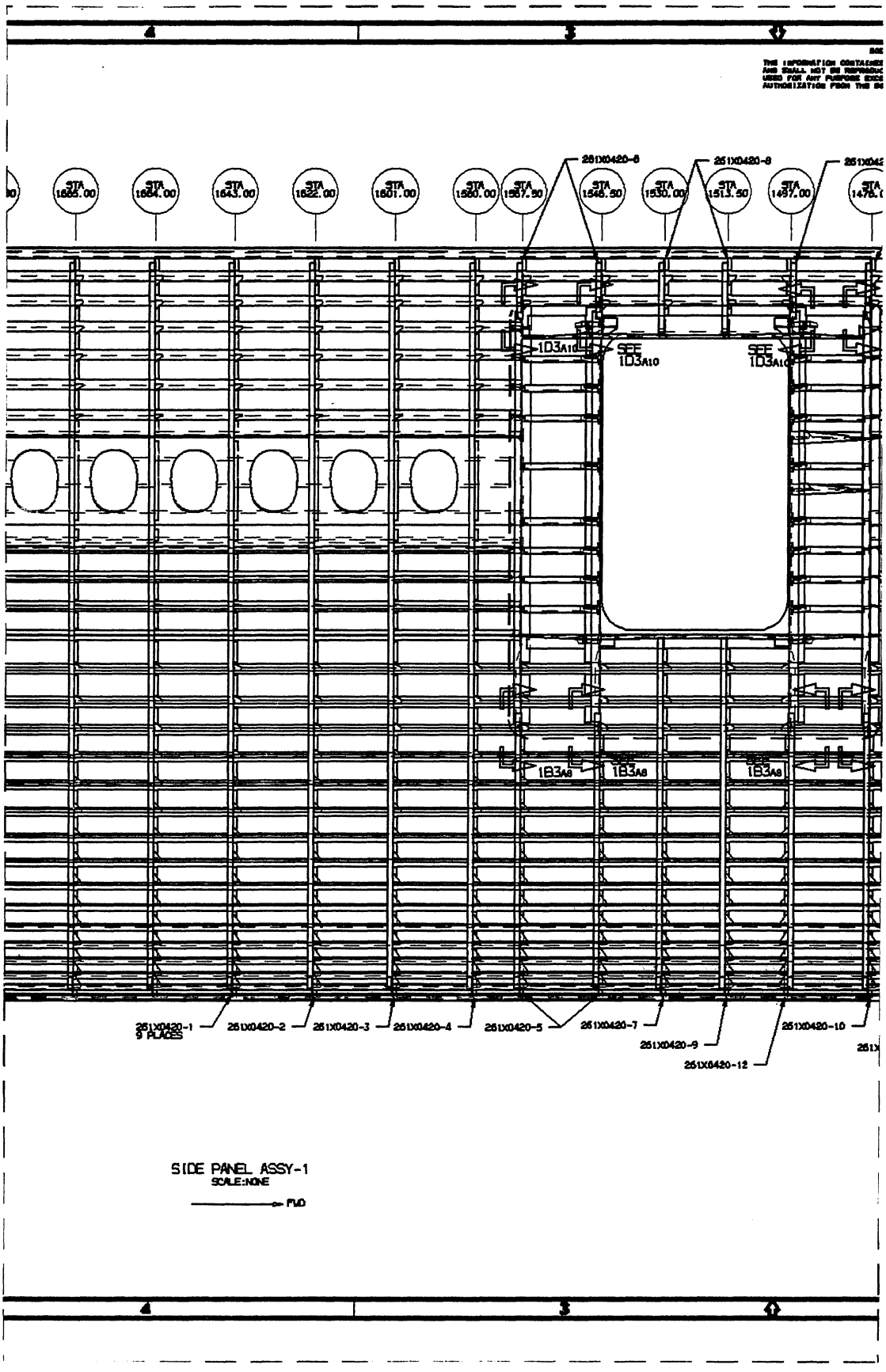
STA 1665.00
STA 1654.00
STA 1643.00
STA 1622.00
STA 1601.00
STA 1580.00
STA 1567.50
STA 1546.50
STA 1530.00
STA 1513.50
STA 1497.00
251X0420-6
251X0420-8
SEE 1D3A10
SEE 1D3A10
1B3A8
1B3A8
1B3A8
251X0420-1 9 PLACES
251X0420-2
251X0420-3
251X0420-4
251X0420-5
251X0420-7
251X0420-9
251X0420-10
251X0420-12
SIDE PANEL ASSY-1
SCALE:NONE
FWD

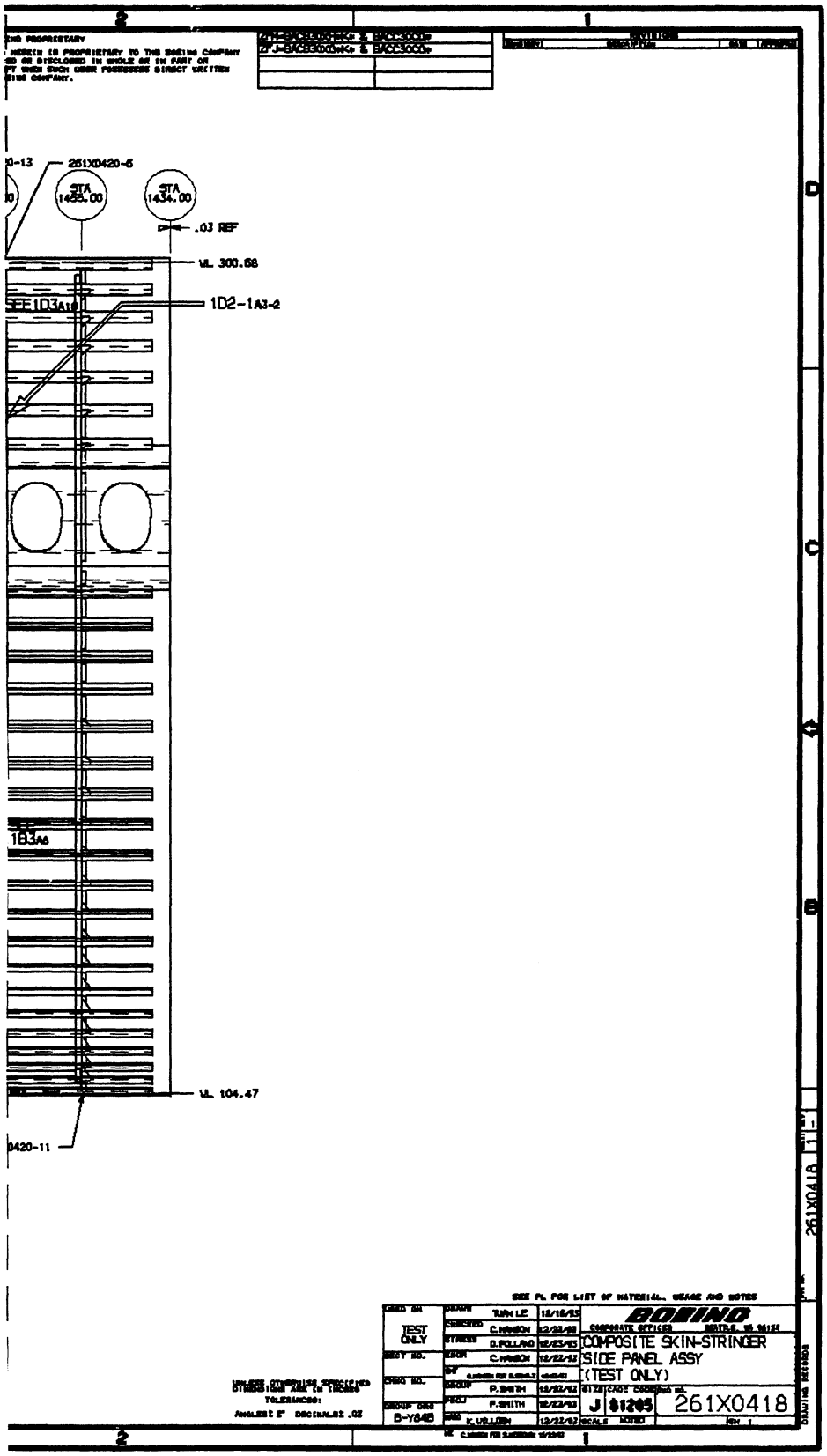
261X0420-6
STA 1455.00
STA 1434.00
.03 REF
WL 300.68
SEE 1D3A10
1D2-1A3-2
1B3A6
WL 104.47
0420-11
TEST ONLY
COMPOSITE SKIN-STRINGER
SIDE PANEL ASSY
(TEST ONLY)
J 81205
261X0418
B-Y648

B-54

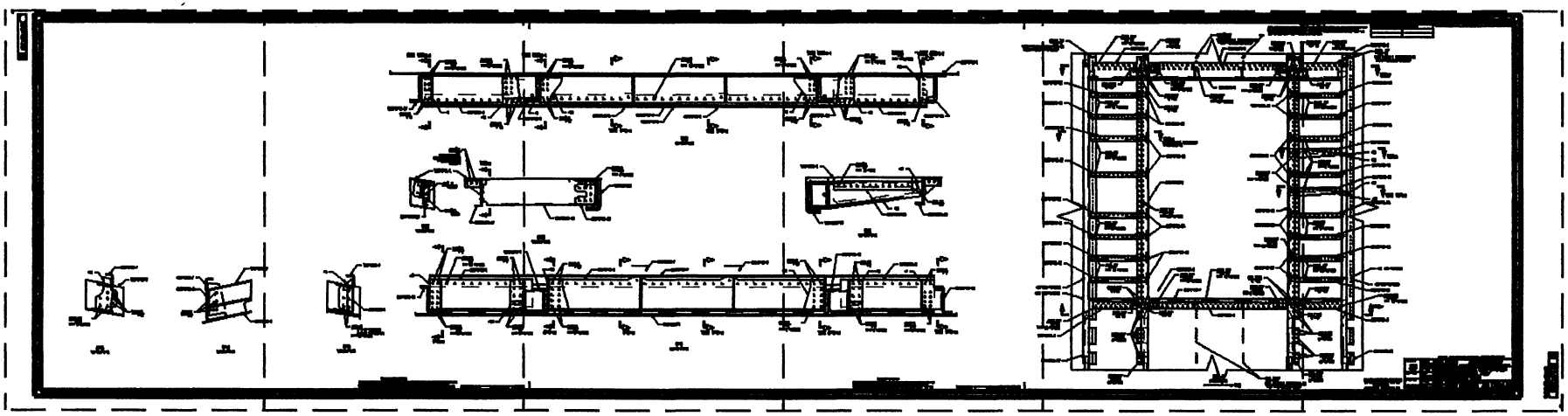

B-55 B-56 B-57 B-58 B-59 B-60

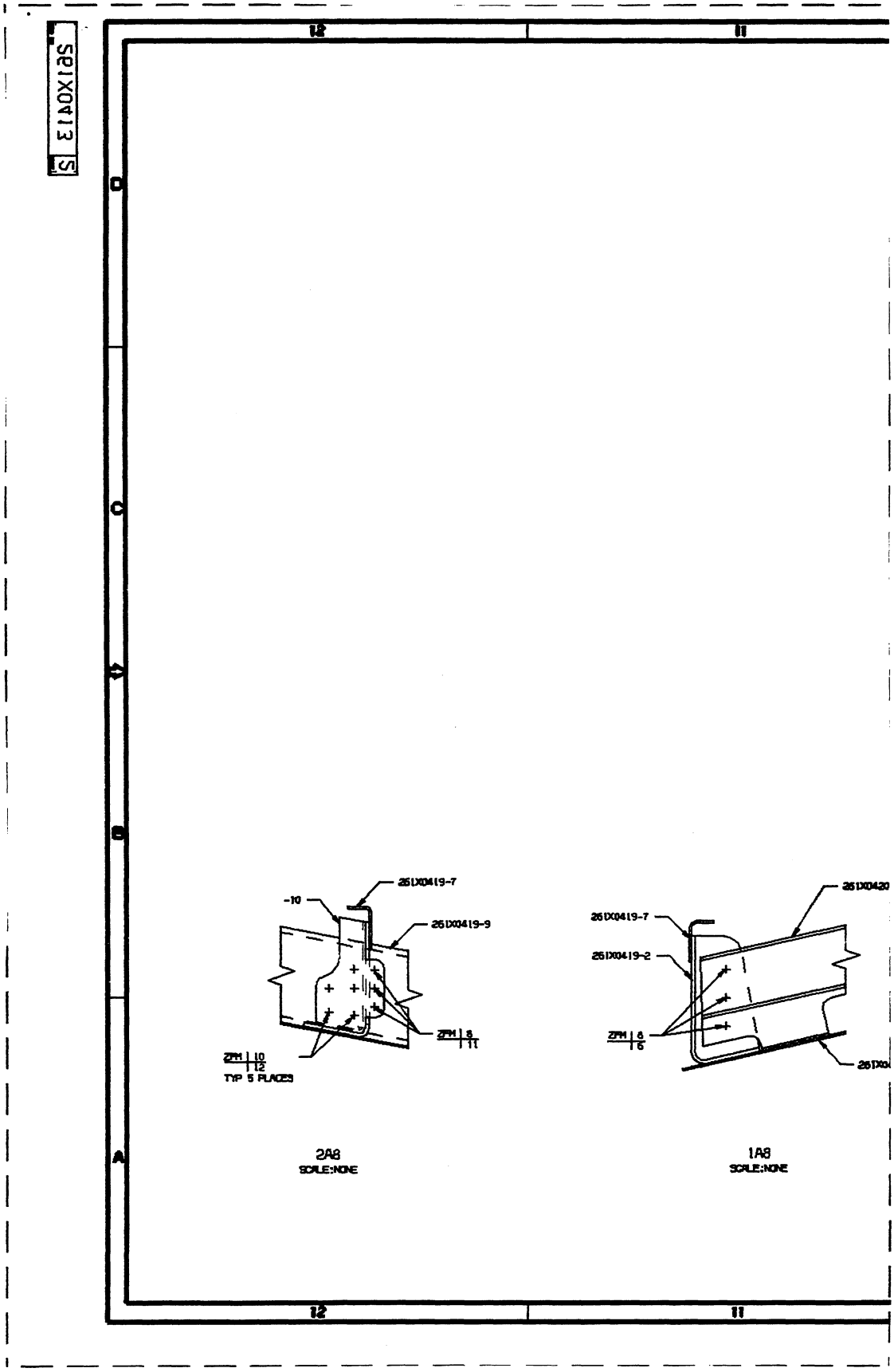

261X0419-7
-10
261X0419-9
ZPM 8
11
ZPM 10
12
TYP 5 PLACES
2A8
SCALE:NONE
261X0420
261X0419-7
261X0419-2
ZPM 8
6
1A8
SCALE:NONE

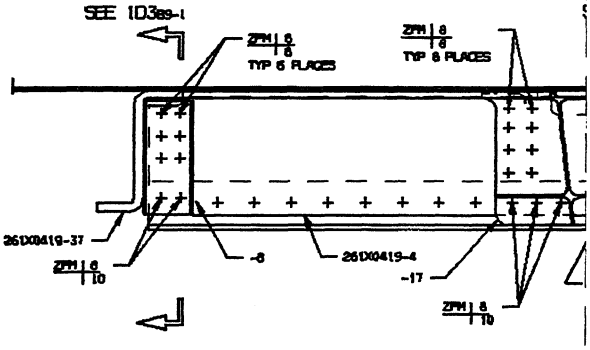

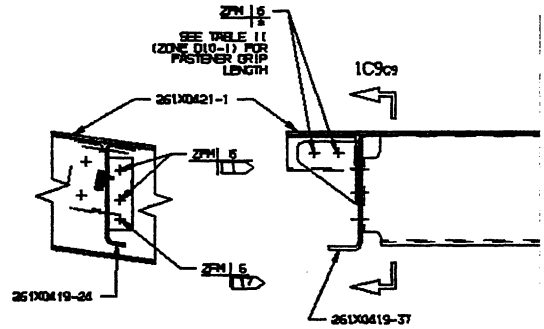

1C9
SCALE:NONE

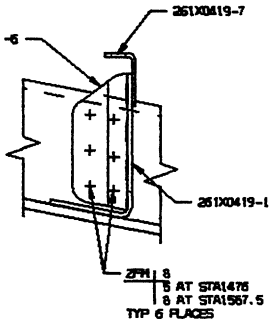

1A9
SCALE:NONE

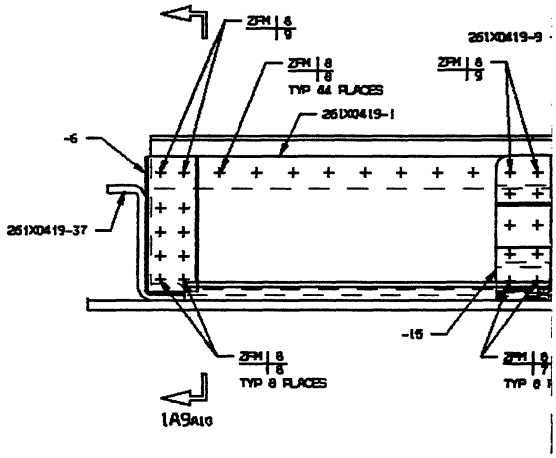

BOEING PROPRIETARY
THE INFORMATION CONTAINED HEREIN IS PROPRIETARY TO THE BOEING COMPANY AND SHALL NOT BE REPRODUCED OR DISCLOSED IN WHOLE OR IN PART OR USED FOR ANY PURPOSE EXCEPT WHEN SUCH USER POSSESSES DIRECT WRITTEN AUTHORIZATION FROM THE BOEING COMPANY.

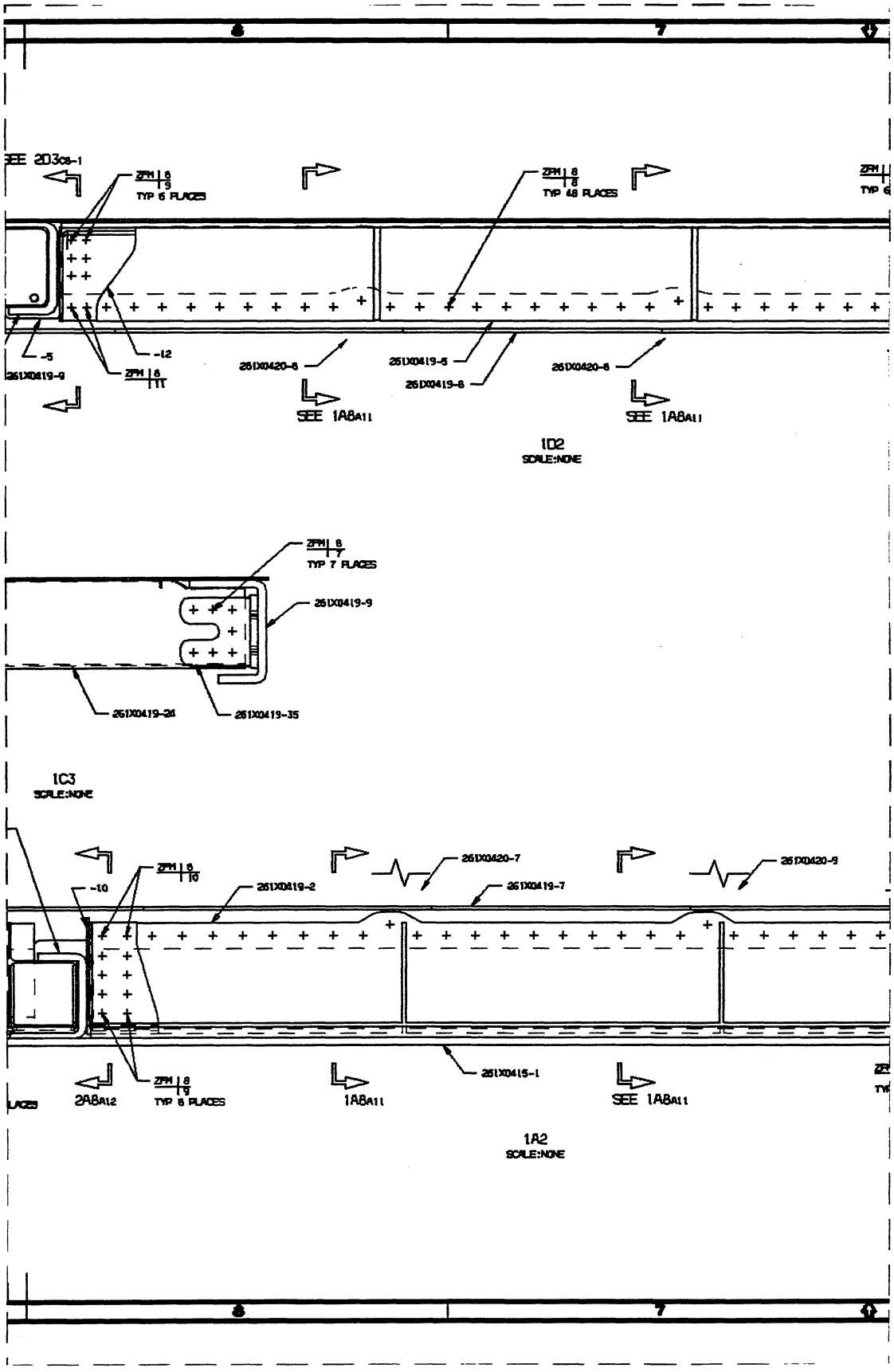
SEE 2D3C8-1
ZFH | 6 | 3
TYP 6 PLACES
ZFH | 8 | 8
TYP 48 PLACES
ZFH | 8 | 11
-5
261X0419-9
-12
261X0420-8
261X0419-5
261X0419-8
261X0420-8
SEE 1A8A11
SEE 1A8A11
1D2
SCALE:NONE
ZFH | 8 | 7
TYP 7 PLACES
261X0419-9
261X0419-26
261X0419-35
1C3
SCALE:NONE
-10
ZFH | 6 | 10
261X0419-2
261X0420-7
261X0419-7
261X0420-9
ZFH | 8 | 9
TYP 8 PLACES
2A8A12
1A8A11
261X0415-1
SEE 1A8A11
1A2
SCALE:NONE

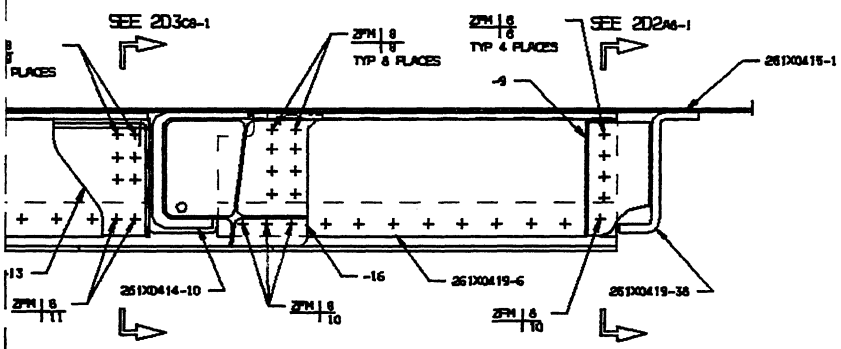

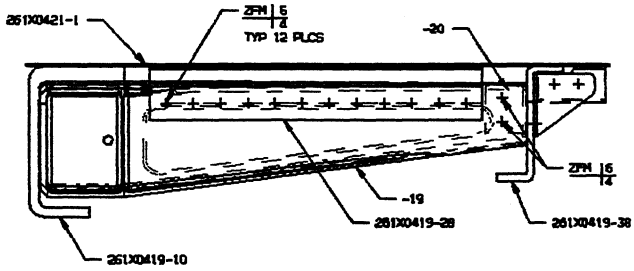

1C1
SCALE:NONE

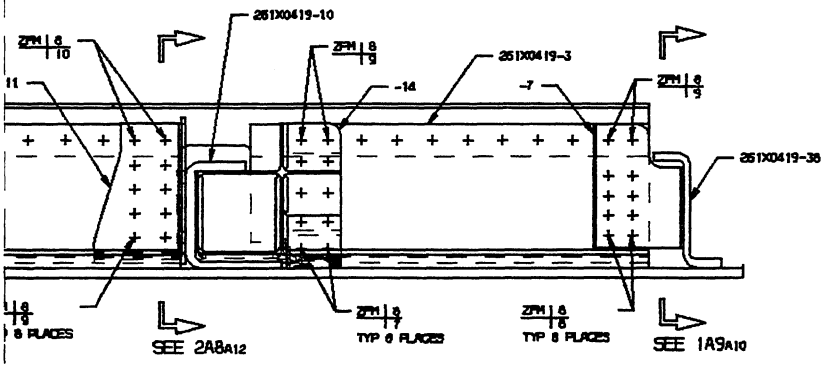

THE INFORMATION CONTAINED HEREIN IS PROPRIETARY TO THE BOEING COMPANY AND SHALL NOT BE REPRODUCED OR DISCLOSED IN WHOLE OR IN PART OR USED FOR ANY PURPOSE EXCEPT THOSE FOR WHICH SUCH PERMISSION IS GIVEN IN WRITING AUTHORIZATION FROM THE BOEING COMPANY.

261X0418 2 -

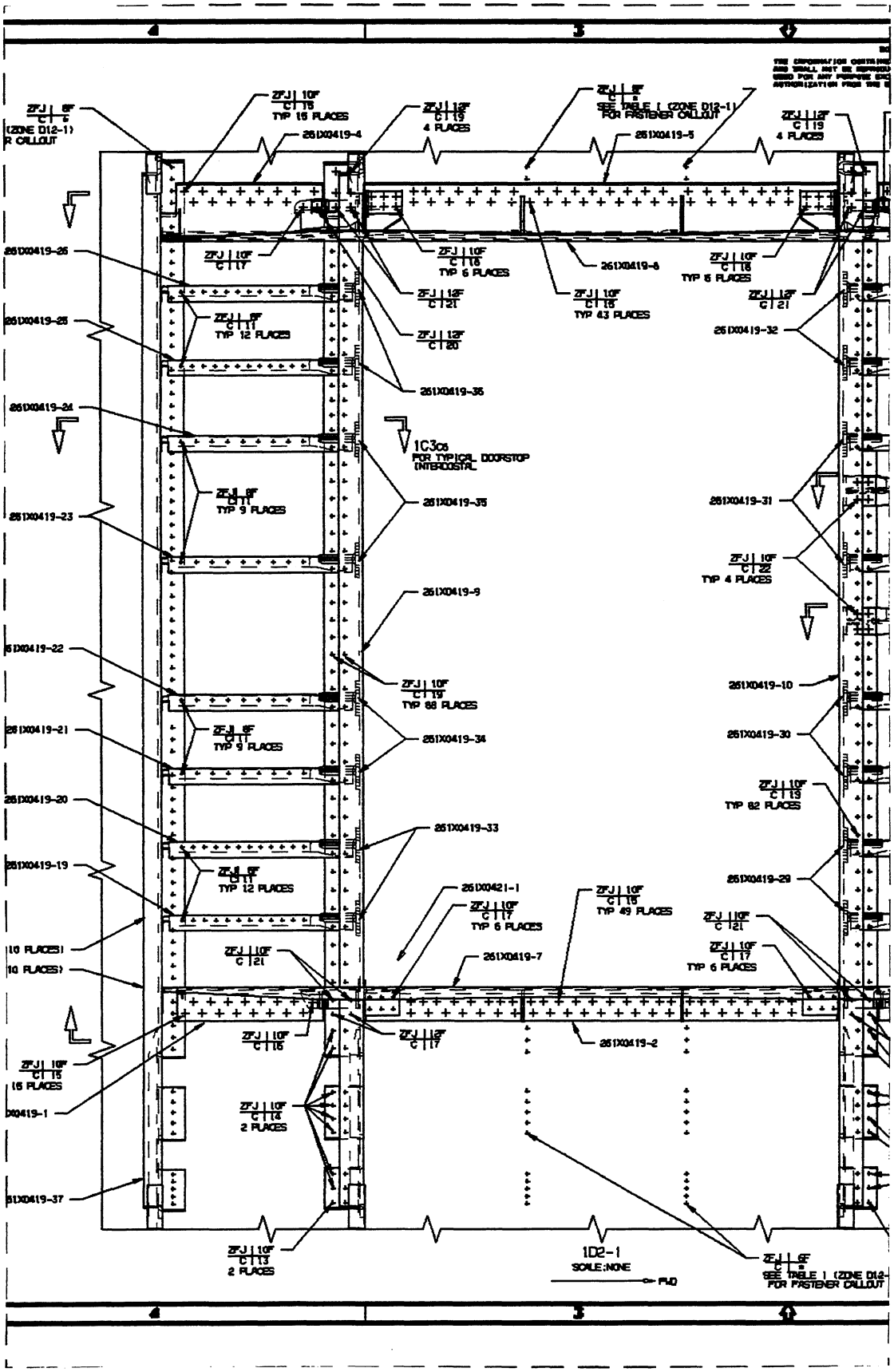
261X0419-4
261X0419-5
261X0419-6
261X0419-25
261X0419-26
261X0419-24
261X0419-23
261X0419-22
261X0419-21
261X0419-20
261X0419-19
261X0419-37
261X0419-35
261X0419-34
261X0419-33
261X0419-9
261X0419-32
261X0419-31
261X0419-10
261X0419-30
261X0419-29
261X0421-1
261X0419-7
261X0419-2
1C3c6
FOR TYPICAL DOORSTOP
(INTERCOSTAL
1D2-1
SOLE:NONE
SEE TABLE 1 (ZONE D12-1)
FOR FASTENER CALLOUT

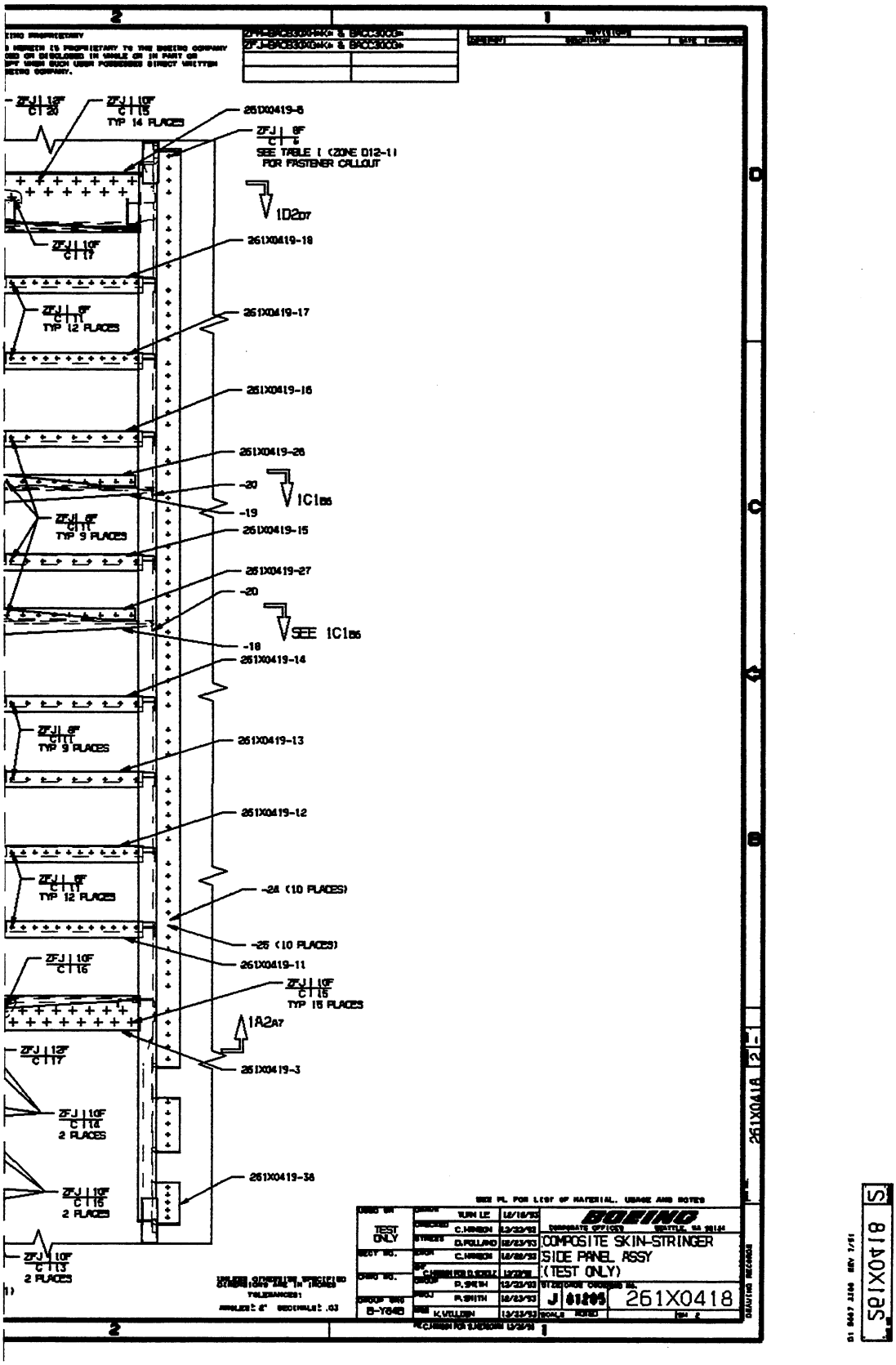
261X0419-8
SEE TABLE I (ZONE D12-11 FOR FASTENER CALLOUT
1D2D7
261X0419-18
261X0419-17
261X0419-16
261X0419-26
-20
-19
1C1B6
261X0419-15
261X0419-27
-20
SEE 1C1B6
-18
261X0419-14
261X0419-13
261X0419-12
-24 (10 PLACES)
-25 (10 PLACES)
261X0419-11
1A2A7
261X0419-3
261X0419-38
TYP 14 PLACES
TYP 12 PLACES
TYP 9 PLACES
TYP 15 PLACES
2 PLACES
BOEING
COMPOSITE SKIN-STRINGER SIDE PANEL ASSY (TEST ONLY)
261X0418
TEST ONLY

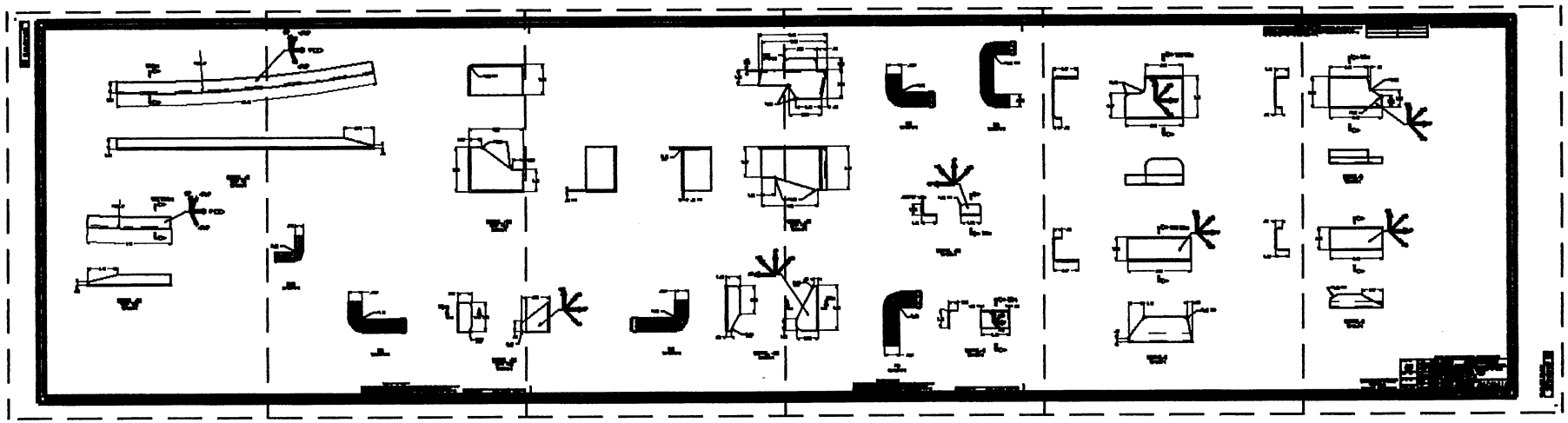

B-61

B-62 B-63 B-64 B-65 B-66 B-67

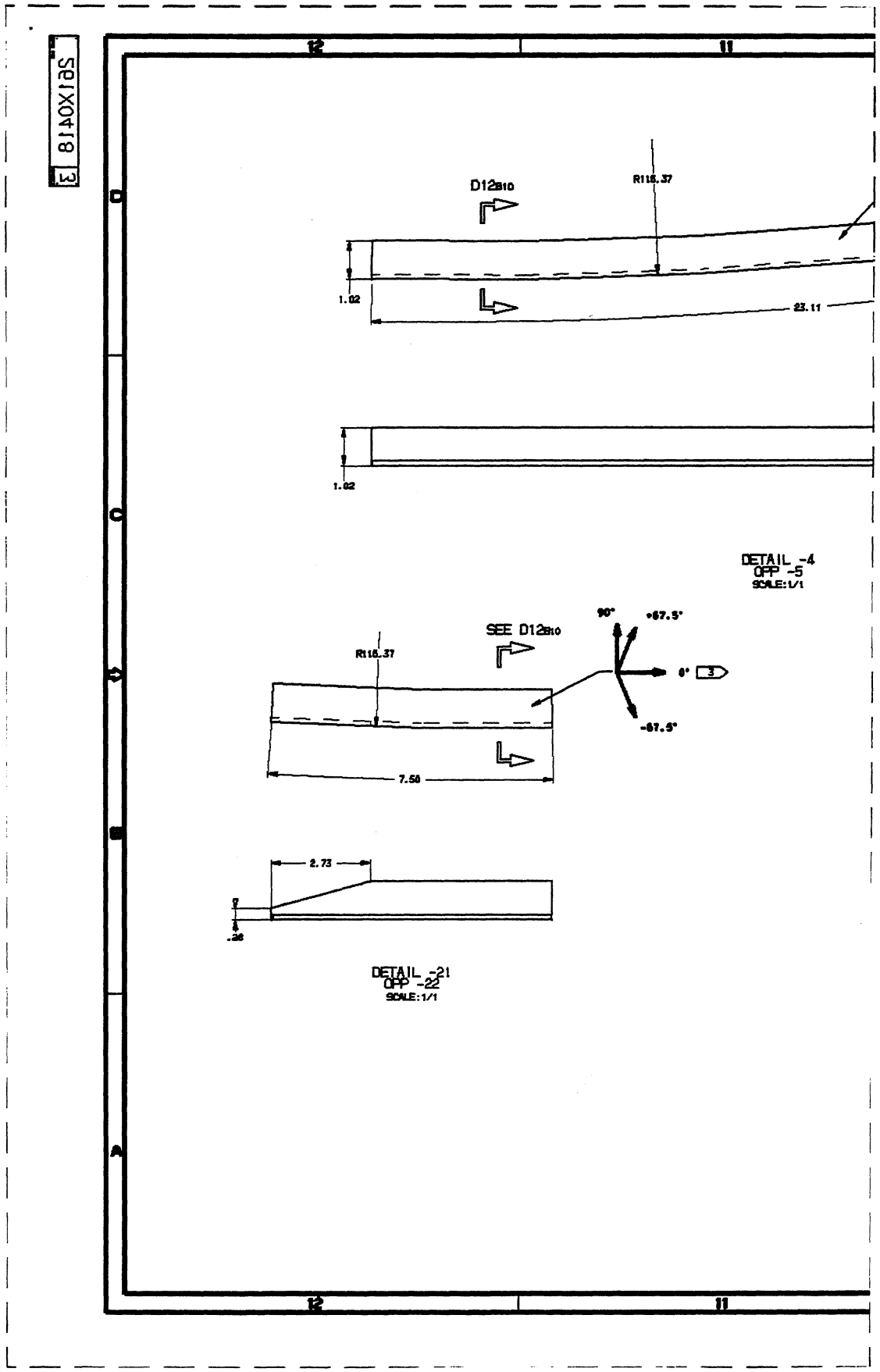
D12B10
R116.37
1.02
23.11
1.02
DETAIL -4
OPP -5
SCALE:1/1
SEE D12B10
R116.37
90°
+67.5°
0°
3
-67.5°
7.50
2.73
.38
DETAIL -21
OPP -22
SCALE:1/1

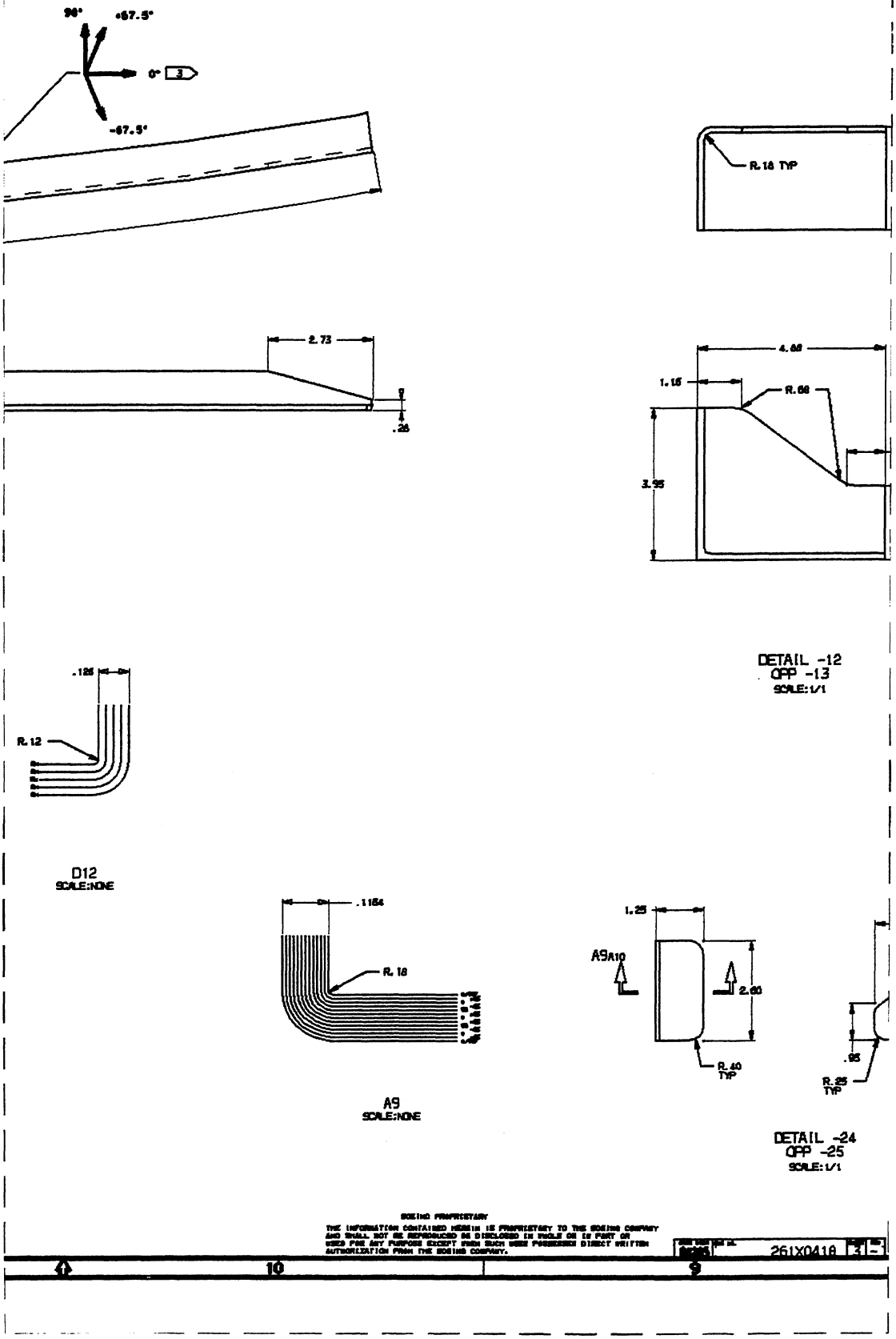
10
9
90°
+67.5°
0°
3
-67.5°
R.18 TYP
2.73
.25
4.88
1.15
R.88
3.95
.125
R.12
D12
SCALE:NONE
.1164
R.18
A9
SCALE:NONE
1.25
A9A10
2.00
R.40
TYP
.95
R.25
TYP
DETAIL -12
OPP -13
SCALE:1/1
DETAIL -24
OPP -25
SCALE:1/1
BOEING PROPRIETARY
THE INFORMATION CONTAINED HEREIN IS PROPRIETARY TO THE BOEING COMPANY AND SHALL NOT BE REPRODUCED OR DISCLOSED IN WHOLE OR IN PART OR USED FOR ANY PURPOSE EXCEPT FROM SUCH WHEN POSSESSED DIRECT WRITTEN AUTHORIZATION FROM THE BOEING COMPANY.
261X0418
3
10
9

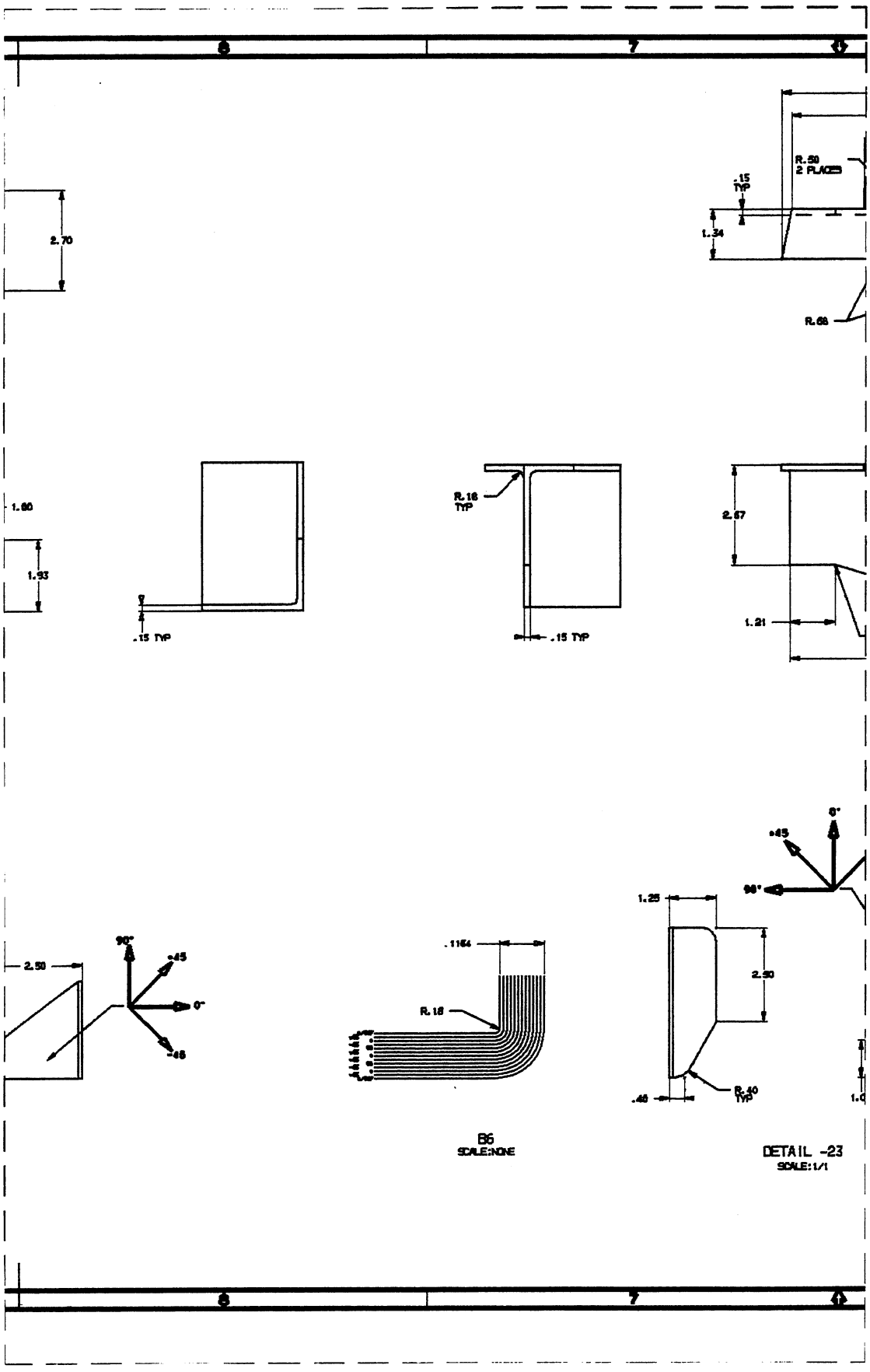
2.70
R.50
2 PLACES
.15
TYP
1.34
R.68
1.80
1.93
.15 TYP
R.16
TYP
.15 TYP
2.67
1.21
2.50
90°
+45
0°
-45
.1164
R.16
1.25
2.50
.46
R.40
TYP
B6
SCALE:NONE
DETAIL -23
SCALE:1/1

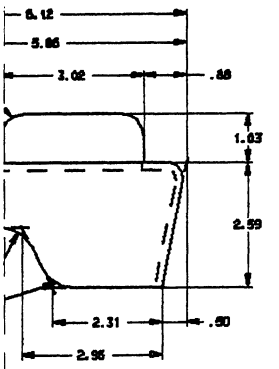

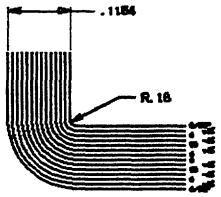

B5
SCALE:NONE

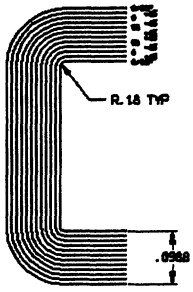

D2
SCALE:NONE

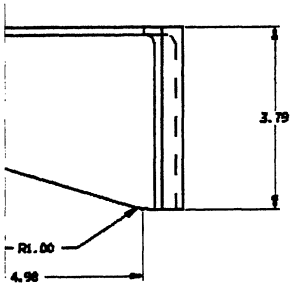

DETAIL -10
OPP -11
SCALE:1/1

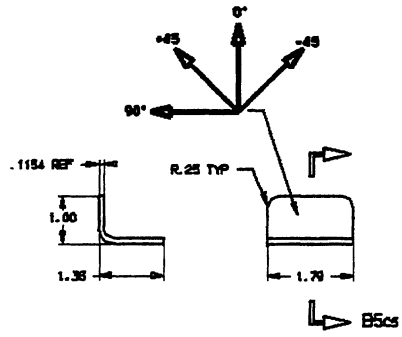

DETAIL -20
SCALE:1/1

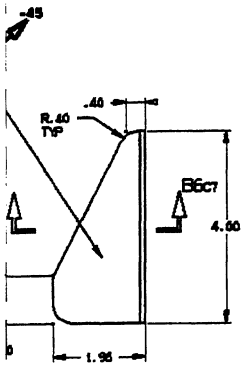

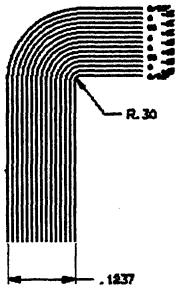

A6
SCALE:NONE

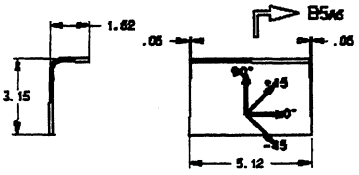

DETAIL-3
SCALE:1/2

THE INFORMATION CONTAINED HEREIN IS PROPRIETARY TO THE BOEING COMPANY AND SHALL NOT BE REPRODUCED OR DISCLOSED IN WHOLE OR IN PART OR USED FOR ANY PURPOSE EXCEPT UNDER SUCH WRITTEN AUTHORIZATION FROM THE BOEING COMPANY.

261X0418 3 -

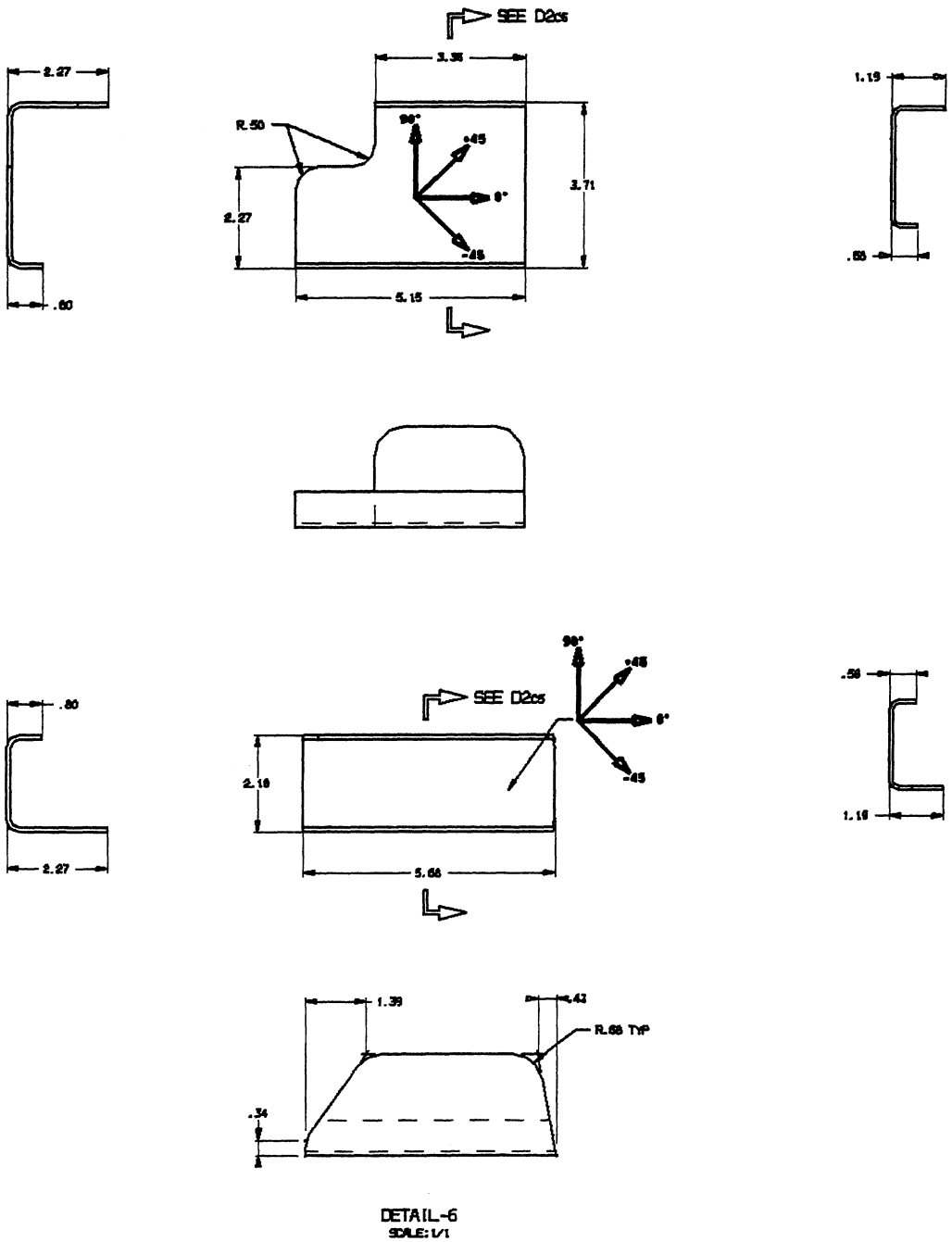

DETAIL-6
SCALE: 1/1

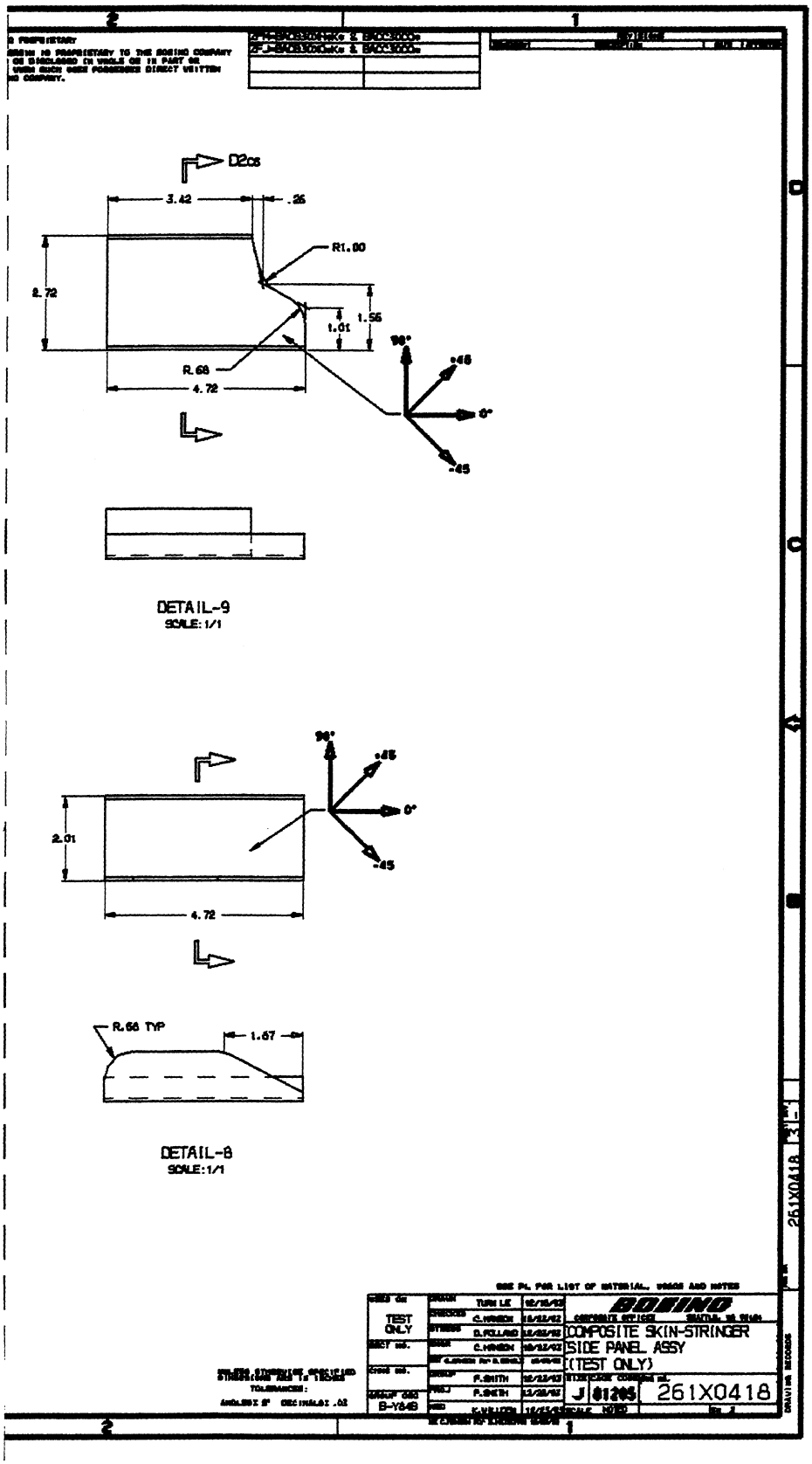
D2cs
3.42
.25
R1.00
2.72
1.01
1.56
R.68
4.72
90°
+45
0°
-45
DETAIL-9
SCALE: 1/1
2.01
R.66 TYP
1.67
DETAIL-8
SCALE: 1/1
TEST ONLY
B-Y649
BOEING
COMPOSITE SKIN-STRINGER SIDE PANEL ASSY (TEST ONLY)
J 01205
261X0418

B-68

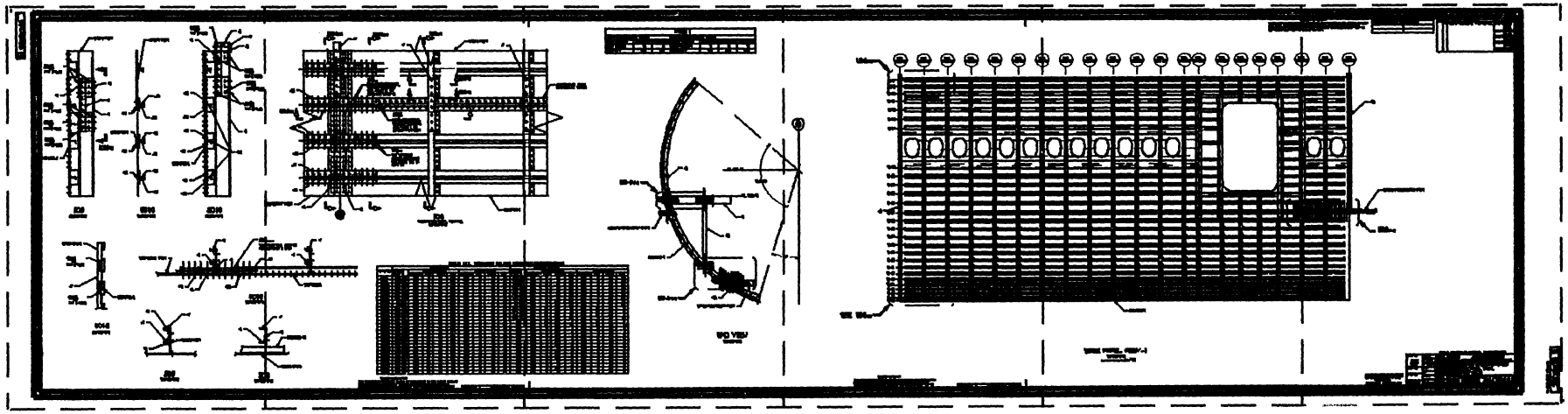

B-69 B-70 B-71 B-72 B-73 B-74

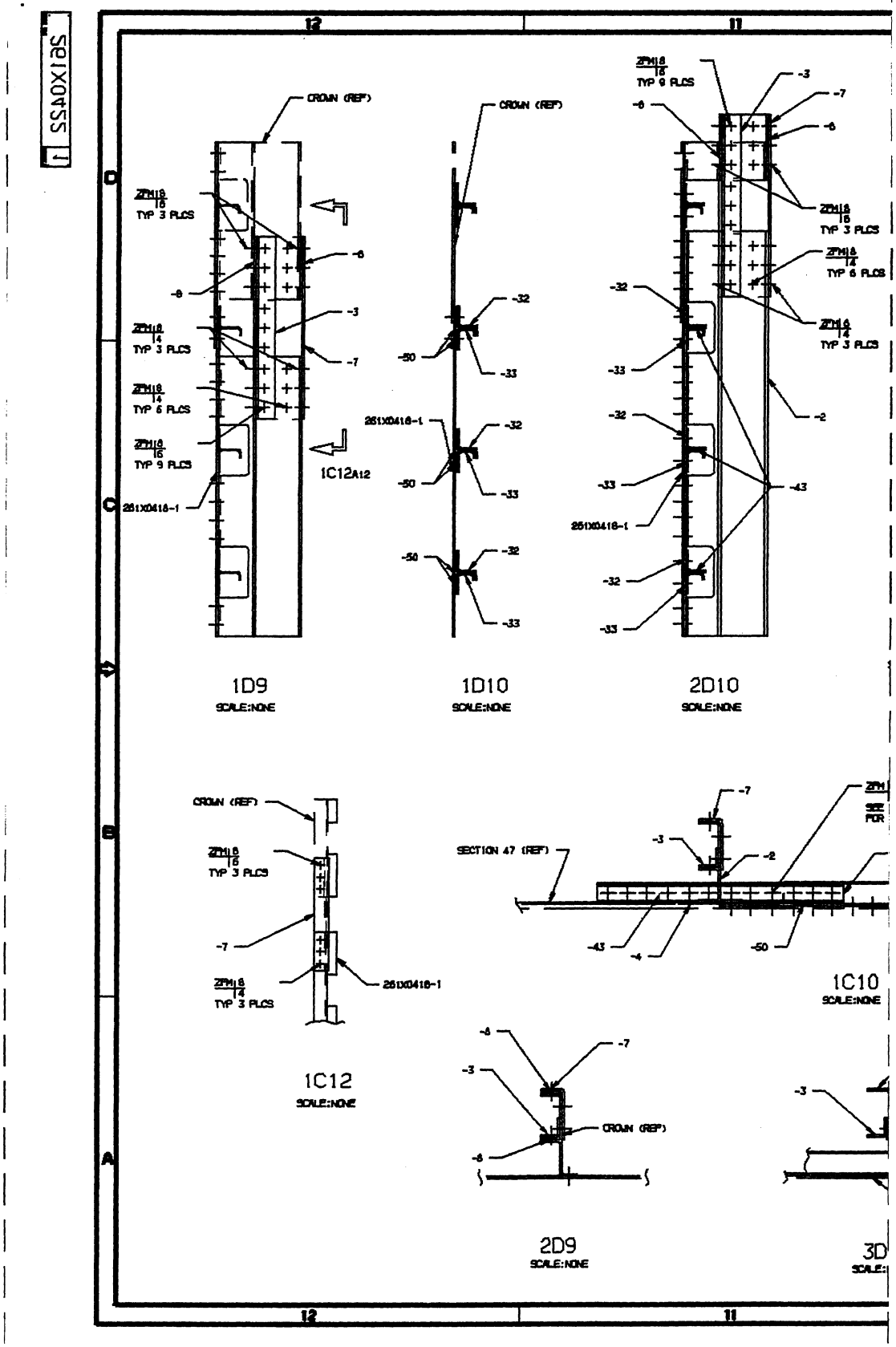

CROWN (REF)
TYP 3 PLCS
TYP 6 PLCS
TYP 9 PLCS
261X0418-1
1C12A12
1D9
SCALE:NONE
1D10
SCALE:NONE
2D10
SCALE:NONE
1C12
SCALE:NONE
SECTION 47 (REF)
1C10
SCALE:NONE
2D9
SCALE:NONE

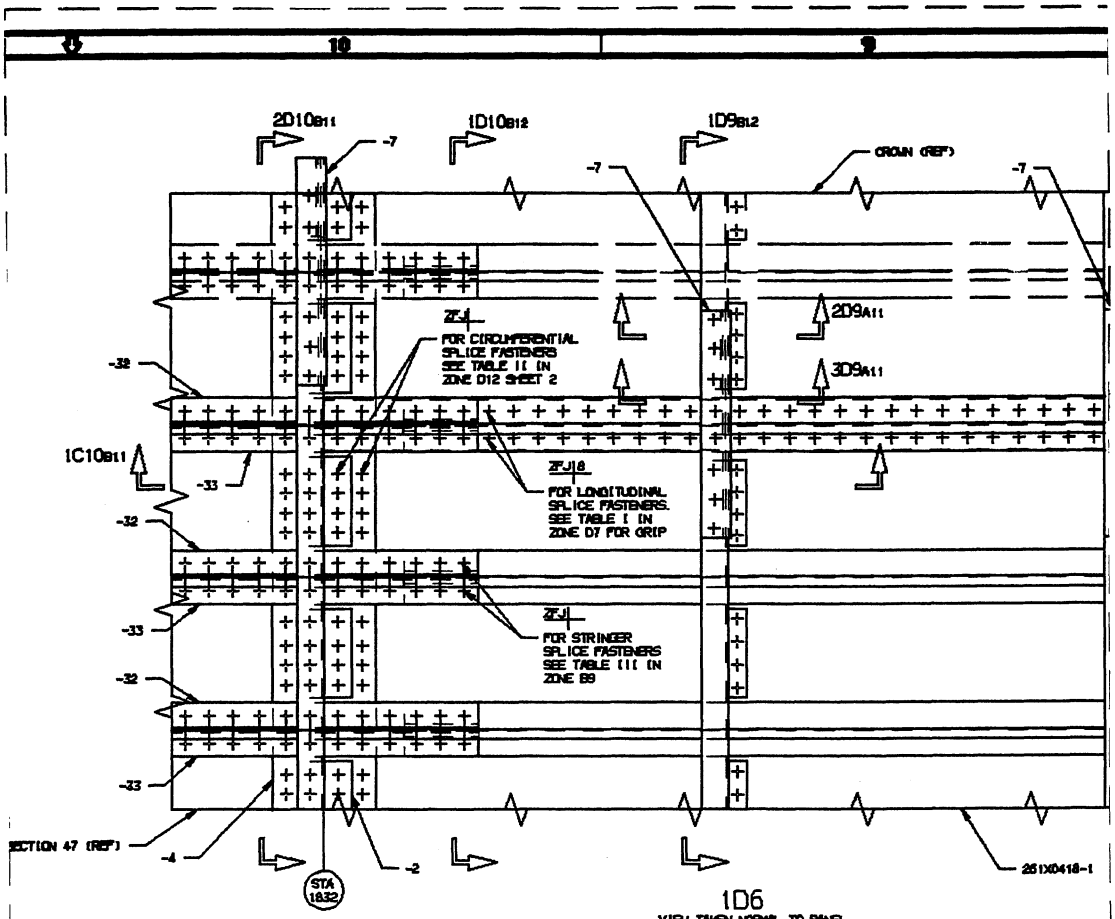

1D6
VIEW TAKEN NORMAL TO PANEL
SCALE:NONE

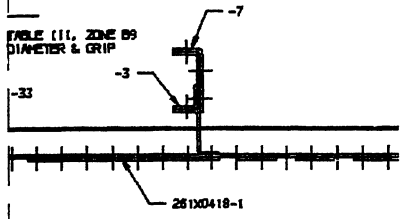

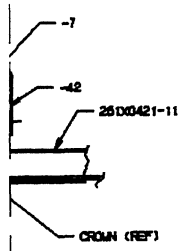

TABLE III. STRINGER SPLICE FASTE

STRINGER	AFT SPLICE									SPLICE
	SPLICE	STRINGER BASE				STRINGER WEB				
	PART #	FILLER#	DIA	GRIP	QTY	FILLER#	DIA	GRIP	QTY	PART #
S-8L	-32, -33	-50	8	-6	24	-43	8	-4	12	-38, -39
S-9L	-32, -33	-50	8	-6	24	-43	8	-4	12	-38, -39
S-10L	-32, -33	-50	8	-6	24	-43	8	-4	12	-38, -39
S-11L	-32, -33	-50	8	-6	24	-43	8	-4	12	-32, -33
S-12L	-32, -33	-50	8	-6	24	-43	8	-4	12	-32, -33
S-13L	-32, -33	-50	8	-6	24	-43	8	-4	12	-32, -33
S-14L	-32, -33	-50	8	-6	24	-43	8	-4	12	-32, -33
S-15L	-6 (2)	-54	8	-9	24	-44	8	-7	12	-6 (2)
S-18L	-6 (2)	-54	8	-9	24	-44	8	-7	12	-6 (2)
S-19L	-32, -33	-50	8	-6	24	-43	8	-4	12	-17, -18
S-20L	-32, -33	-50	8	-6	24	-43	8	-4	12	-19, -20
S-21L	-32, -33	-50	8	-6	24	-43	8	-4	12	-21, -22
S-22L	-40, -41	-53	8	-7	24	-45	8	-6	12	-23, -24
S-23L	-32, -33	-50	8	-6	24	-43	8	-4	12	-25
S-24L	-32, -33	-50	8	-6	24	-43	8	-4	12	---
S-25L	-32, -33	-50	8	-6	24	-43	8	-4	12	-26
S-26L	-32, -33	-50	8	-6	24	-43	8	-4	12	-26
S-27L	-34, -35	-51	8	-7	24	-46	8	-6	12	-27
S-28L	-34, -35	-51	8	-7	24	-46	8	-6	12	-27
S-29L	-34, -35	-51	8	-7	24	-46	8	-6	12	-27
S-30L	-34, -35	-51	8	-7	24	-46	8	-6	12	-28
S-31L	-34, -35	-51	8	-7	24	-46	8	-6	12	-30
S-32L	-34, -35	-51	8	-7	24	-46	8	-6	12	-28
S-33L	-34, -35	-51	8	-7	24	-46	8	-6	12	-28
S-34L	-36, -37	-52	8	-6	24	-46	8	-5	12	-29
S-35L	-36, -37	-52	8	-6	24	-46	8	-5	12	-30
S-36L	-36, -37	-52	8	-6	24	-47	8	-6	12	-30
S-37L	-36, -37	-52	8	-6	24	-47	8	-6	12	-29
S-38L	-36, -37	-52	8	-6	24	-47	8	-6	12	-31

BOEING PROPRIETARY
THE INFORMATION CONTAINED HEREIN IS PROPRIETARY TO THE BOEING COMPANY AND SHALL NOT BE REPRODUCED OR DISCLOSED IN WHOLE OR IN PART OR USED FOR ANY PURPOSE EXCEPT WHEN SUCH USER POSSESSES DIRECT WRITTEN AUTHORIZATION FROM THE BOEING COMPANY.

261X0422 1 A

TABLE I						
UPPER LONGITUDINAL SPLICE			LOWER LONGITUDINAL SPLICE			
BODY STATION	1434-1601	1601-1632	BODY STATION	1434-1476	1476-1727	1727-1832
GRIP LENGTH	6	5	GRIP LENGTH	5	6	5
QUANTITY	246	340	QUANTITY	52	386	146

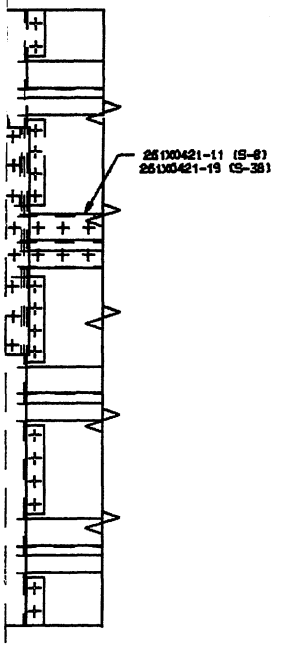

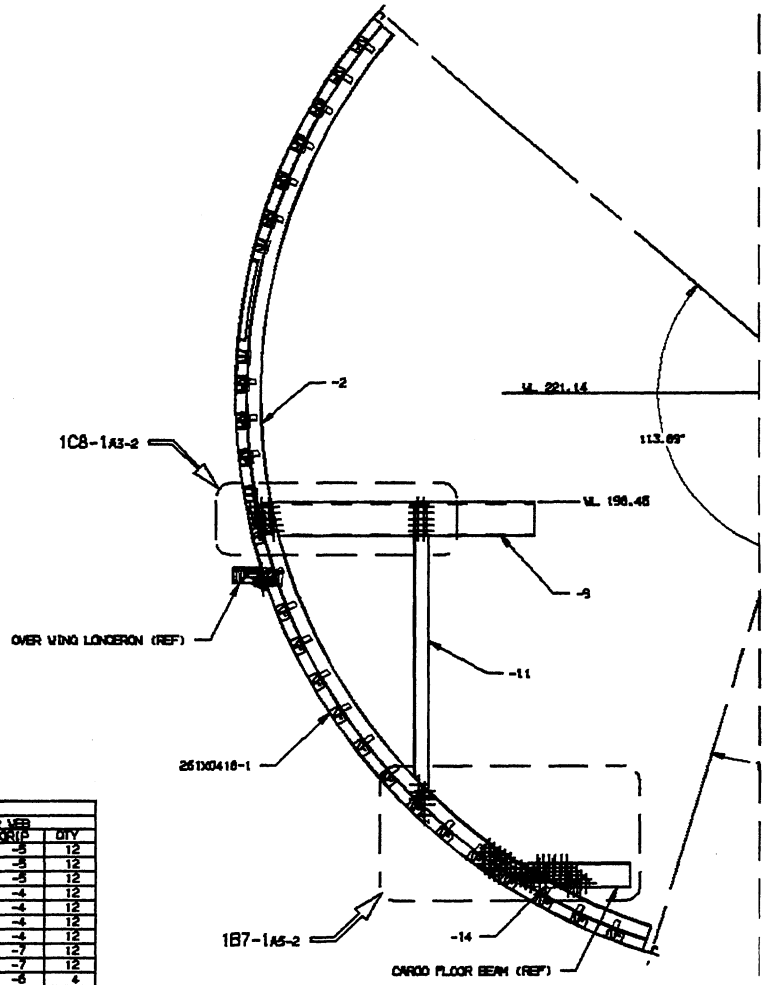

END VIEW
SCALE:NONE

NER REQUIREMENTS

FORWARD SPLICE							
STRINGER BASE				STRINGER WEB			
FILLER	DIA	GRIP	QTY	FILLER	DIA	GRIP	QTY
-35	8	-9	24	-48	8	-5	12
-35	8	-9	24	-48	8	-5	12
-35	8	-9	24	-48	8	-5	12
-35	8	-8	24	-43	8	-4	12
-35	8	-8	24	-43	8	-4	12
-35	8	-8	24	-43	8	-4	12
-35	8	-8	24	-43	8	-4	12
-36	8	-10	24	-44	8	-7	12
-36	8	-10	24	-44	8	-7	12
----	10	-15	14	-43	10	-6	4
----	10	-15	14	-43	10	-6	4
----	10	-18	14	-43	10	-6	4
----	10	-19	20	-49	8	-7	8
----	10	-18	7	----	10	-7	3
----	---	----	---	----	---	---	---
----	8	-12	7	----	6	-4	3
----	8	-12	7	----	6	-4	3
----	8	-10	7	----	6	-4	3
----	8	-10	7	----	6	-4	3
----	8	-10	7	----	6	-4	3
----	8	-10	5	----	6	-4	3
----	8	-9	6	----	6	-4	3
----	8	-10	5	----	6	-4	3
----	8	-10	5	----	6	-4	3
----	8	-10	5	----	6	-4	3
----	8	-9	6	----	6	-4	3
----	8	-9	6	----	6	-4	3
----	8	-10	5	----	6	-4	3
----	8	-9	6	----	6	-4	3

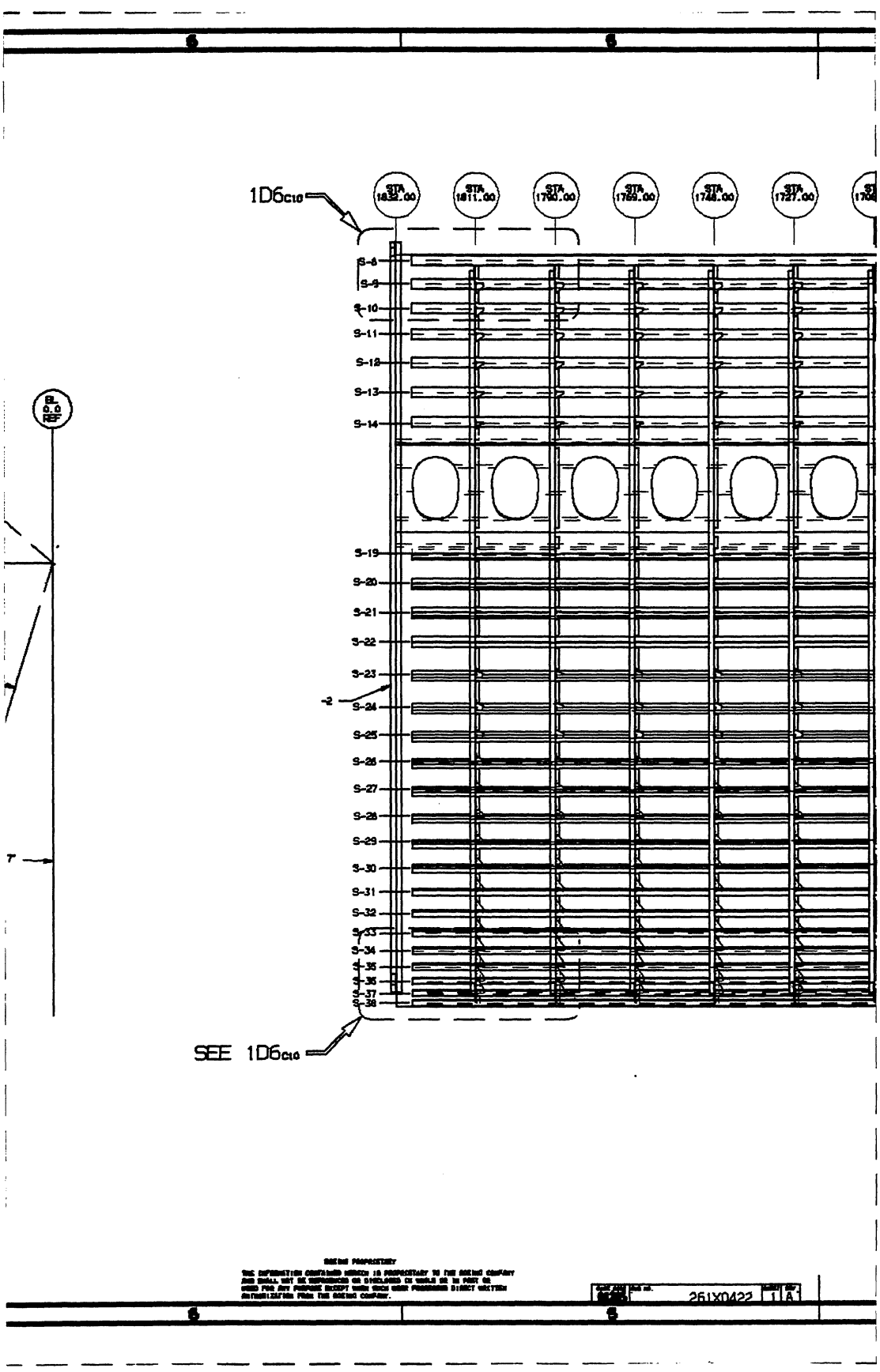
1D6C10
STA 1832.00
STA 1811.00
STA 1790.00
STA 1769.00
STA 1748.00
STA 1727.00
EL 0.0 REF
S-8
S-9
S-10
S-11
S-12
S-13
S-14
S-19
S-20
S-21
S-22
S-23
S-24
S-25
S-26
S-27
S-28
S-29
S-30
S-31
S-32
S-33
S-34
S-35
S-36
S-37
S-38
SEE 1D6C10
261X0422
1A

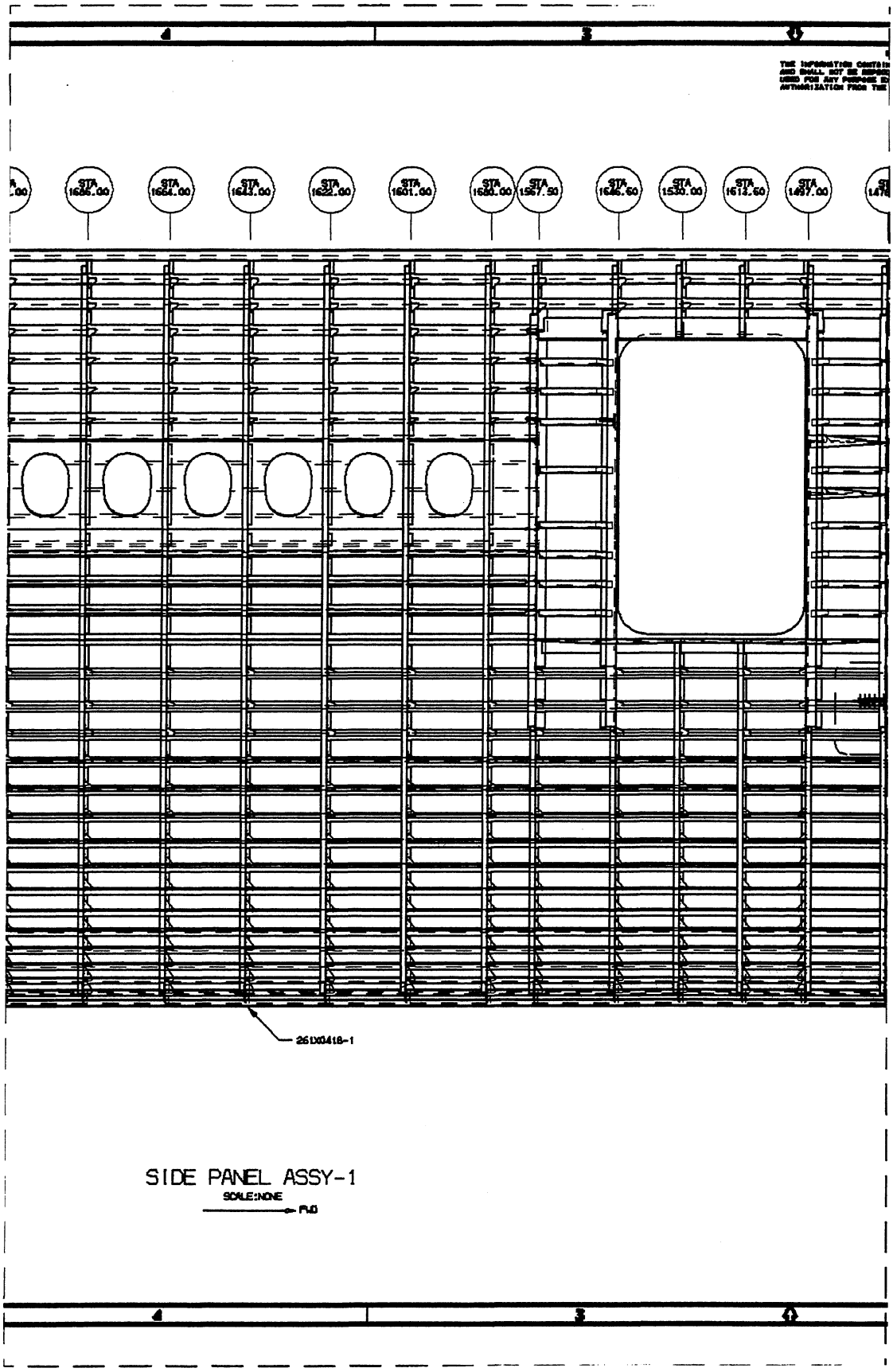

SIDE PANEL ASSY-1

SCALE:NONE

FWD

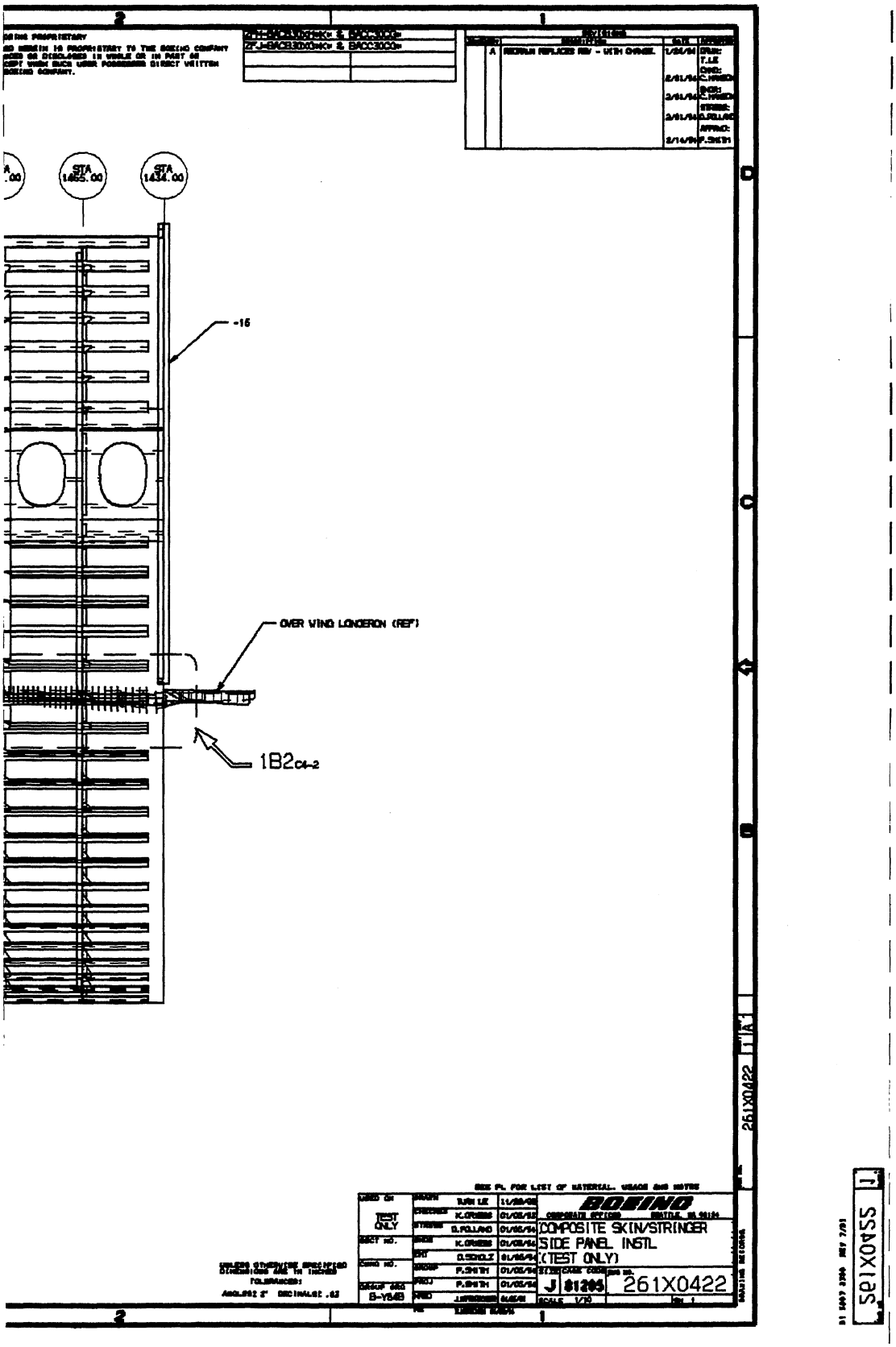
STA 1465.00
STA 1434.00
-15
OVER WING LONGERON (REF)
1B2C4-2
TEST ONLY
COMPOSITE SKIN/STRINGER
SIDE PANEL INSTL
(TEST ONLY)
J 81205
261X0422
SCALE 1/10

B-75

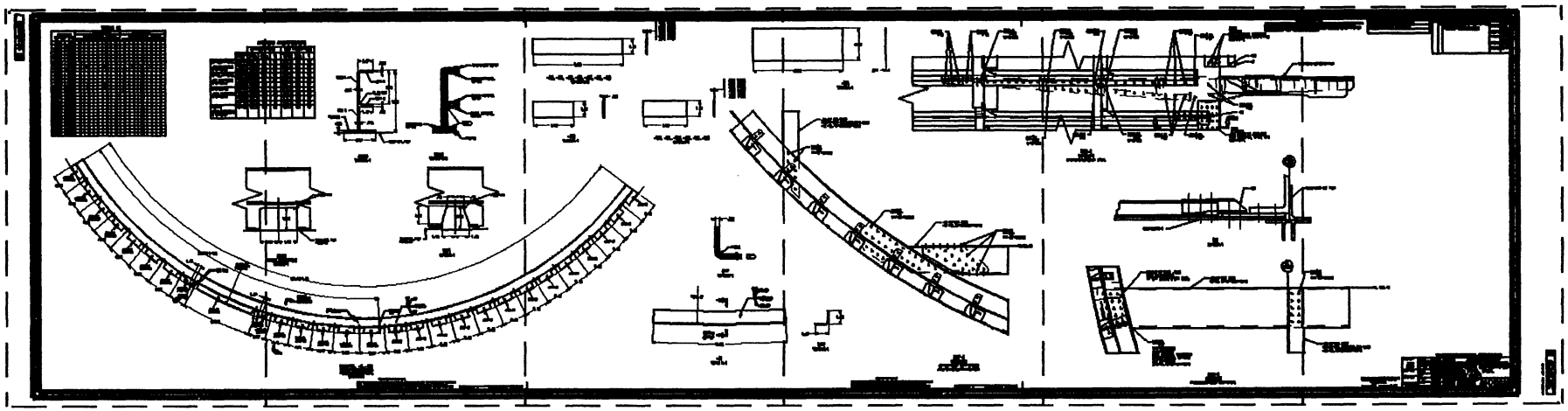

B-76 B-77 B-78 B-79 B-80 B-81

TABLE II

LOCATION BETWEEN STGR	AFT SPLICE					FWD SPLICE				
	DIA	FRM & PLT		PLATE		DIA	FRM & PLT		PLATE	
		QTY	GRIP	QTY	GRIP		QTY	GRIP	QTY	GRIP
S-9L - S-9	8	8	7	8	5	8	8	9	8	7
S-9 - S-10L	8	8	7	8	5		8	9	8	7
S-10L - S-11L	8	8	7	8	5		8	9	8	7
S-11L - S-12L	8	8	7	8	5		8	9	8	7
S-12L - S-13L	8	8	7	8	5	8	8	9	8	7
S-13L - S-14L	8	8	7	8	5	8	8	9	8	7
S-14L - S-15L	8	4	7	4	5	8	4	9	4	7
S-15L - S-16L	8	28	9	28	8	8	28	11	28	9
S-16L - S-19L	8	4	7	4	5	10	2	10	2	8
S-19L - S-20L	8	8	7	8	5	10	4	10	4	8
S-20L - S-21L	8	8	7	8	5	10	4	10	4	8
S-21L - S-22L	8	8	7	8	5	10	4	10	4	8
S-22L - S-23L	8	10	7	10	5	10	4	10	4	8
S-23L - S-24L	8	10	7	10	5	10	4	10	4	8
S-24L - S-25L	8	8	7	8	5	10	4	13	4	8
S-25L - S-26L	8	8	7	8	5	8	4	13	4	8
S-26L - S-27L	8	8	7	8	5	8	4	13	4	6
S-27L - S-28L	8	8	7	8	5	8	4	11	4	6
S-28L - S-29L	8	8	7	8	5	8	4	11	4	6
S-29L - S-30L	8	8	7	8	5	8	4	10	4	6
S-30L - S-31L	8	8	7	8	5	8	4	10	4	6
S-31L - S-32L	8	8	7	8	5	8	4	10	4	6
S-32L - S-33L	8	8	7	8	5	8	4	10	4	6
S-33L - S-34L	8	8	7	8	5	8	4	10	4	6
S-34L - S-35L	8	8	7	8	5	8	4	10	4	6
S-35L - S-36L	8	8	7	8	5	8	4	10	4	6
S-36L - S-37L	8	8	7	8	5	8	4	10	4	6
S-37L - S-38L	8	8	7	8	5	8	4	10	4	6

	FRAME AREA	MATL TYPE	TO SU
LARGE HANDREL (96 CARRIERS 3 LAYERS)	CAP A	2	24
	WEB A	2	12
	CAP B	2	24
SMALL HANDREL (64 CARRIERS 3 LAYERS)	CAP B	2	24
	WEB B	2	12
	FLANGE	2	12
OVERBRAID (144 CARRIERS 3 LAYERS)	CAP A	2	24
	WEB A	2	12
	WEB B	2	12
	FLANGE	2	12
PLANK (144 CARRIERS 3 LAYERS)	FLANGE	2	12

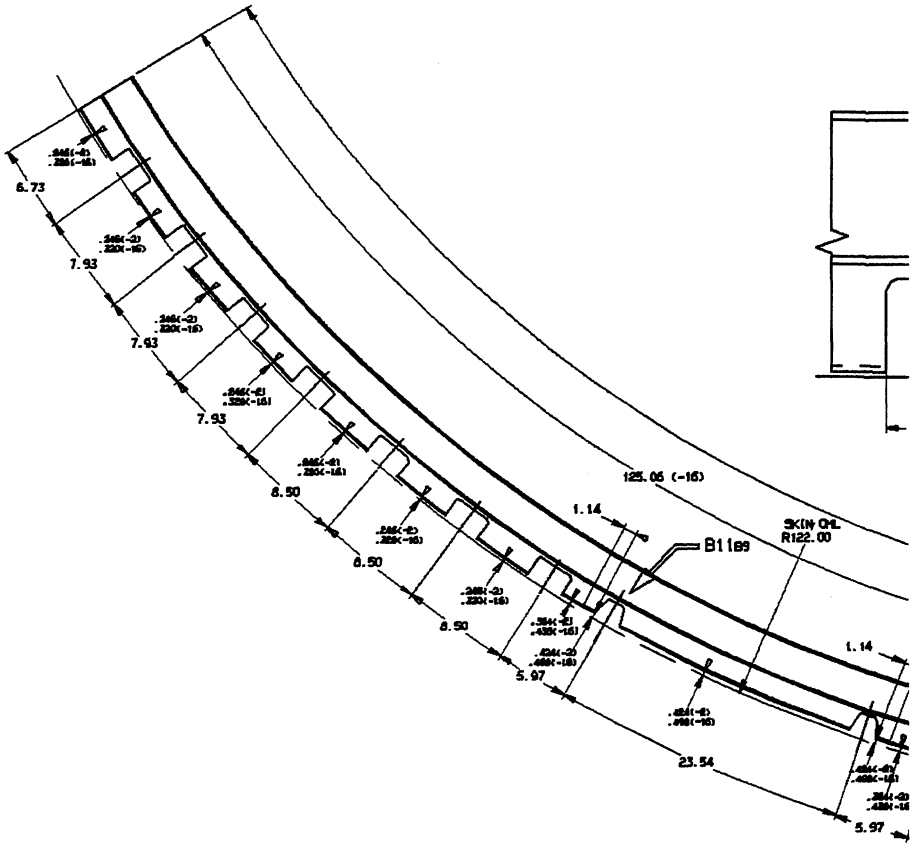

FORM ARCHITECTURE

ANGLE		±60° FIBER ANGLE		
	%	MATL TYPE	TOW SIZE	%
K	50	[2]	6K	50
K	33	[2]	6K	67
K	50	[2]	6K	50
K	50	[2]	6K	50
K	33	[2]	6K	67
K	33	[2]	6K	67
K	50	[2]	6K	50
K	33	[2]	6K	67
K	33	[2]	6K	67
K	33	[2]	6K	67
K	33	[2]	6K	67

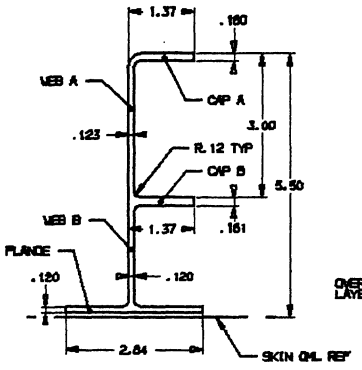

2B10
SCALE: 1/1

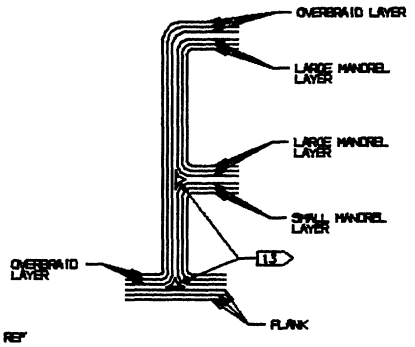

1B10
SCALE: NONE

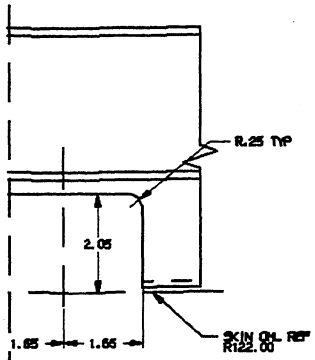

1A10
TYPICAL MOUSE HOLE
SCALE: 1/1

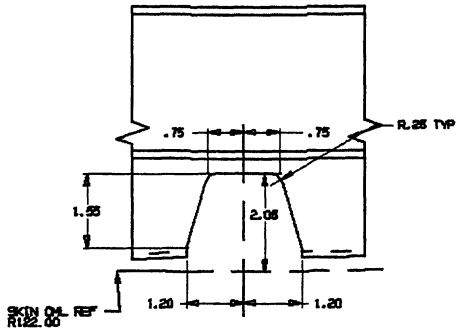

B11
SCALE: 1/1

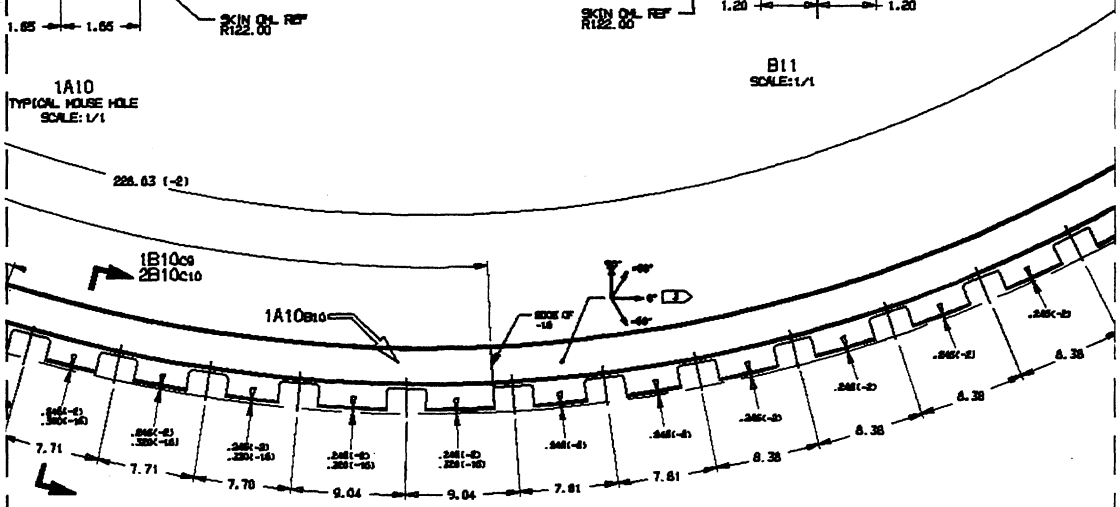

DETAIL -2.-16
MOUSE HOLES SPACING
MEASURE ON SKIN OML
SCALE: 1/4

BOEING PROPRIETARY
THE INFORMATION CONTAINED HEREIN IS PROPRIETARY TO THE BOEING COMPANY AND SHALL NOT BE REPRODUCED OR DISCLOSED IN WHOLE OR IN PART OR USED FOR ANY PURPOSE EXCEPT WHEN SUCH USE POSSESSES DIRECT WRITTEN AUTHORIZATION FROM THE BOEING COMPANY.

261X0422 2 A

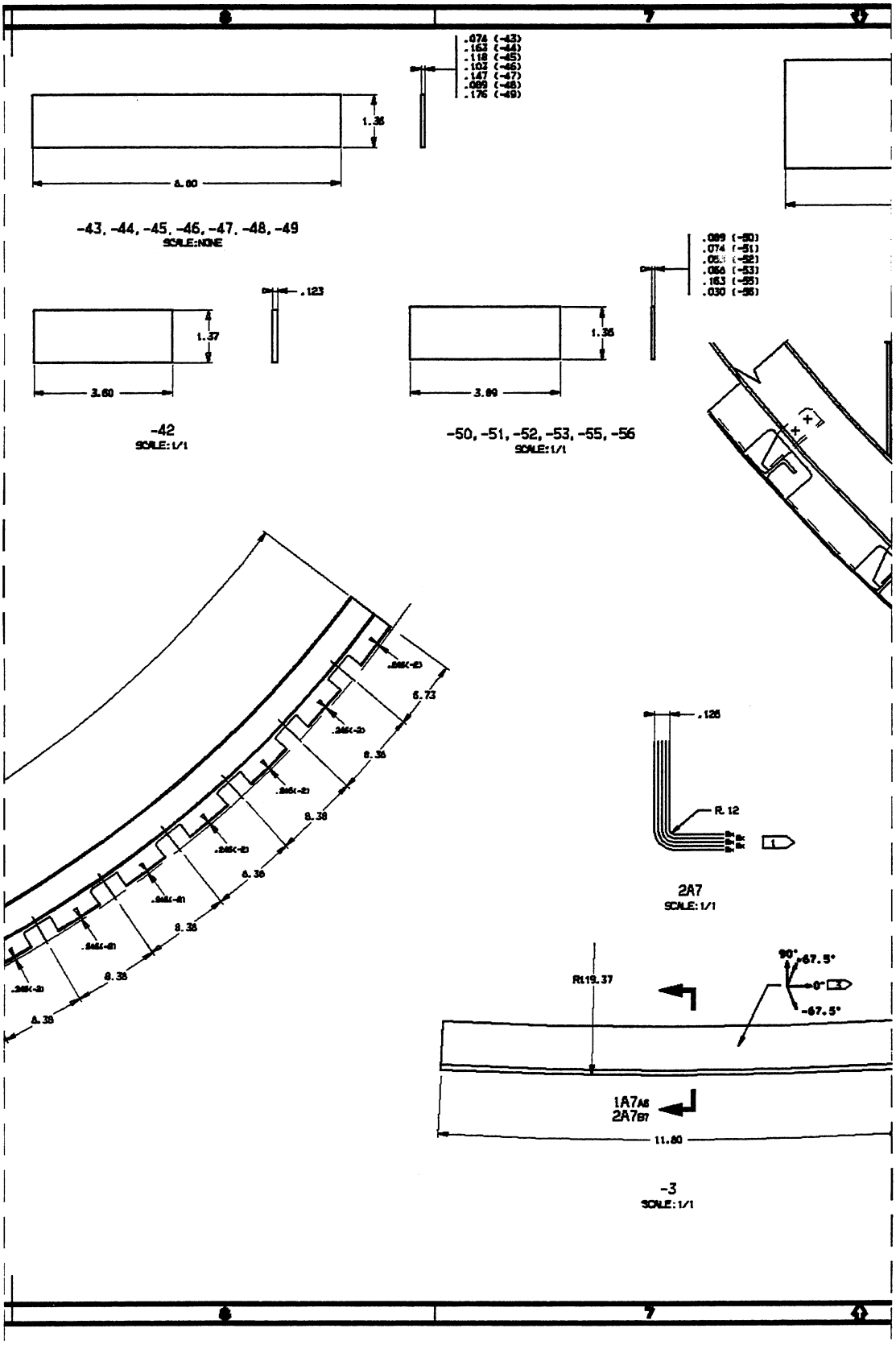
.074 (-43)
.163 (-44)
.118 (-45)
.103 (-46)
.147 (-47)
.089 (-48)
.176 (-49)
1.38
8.00
-43, -44, -45, -46, -47, -48, -49
SCALE:NONE
.123
1.37
3.60
-42
SCALE: 1/1
.089 (-50)
.074 (-51)
.056 (-53)
.163 (-55)
.030 (-56)
1.38
3.89
-50, -51, -52, -53, -55, -56
SCALE: 1/1
6.73
8.38
8.38
8.38
8.38
8.38
.126
R.12
2A7
SCALE: 1/1
R119.37
90°
67.5°
0°
-67.5°
1A7A6
2A7B7
11.80
-3
SCALE: 1/1

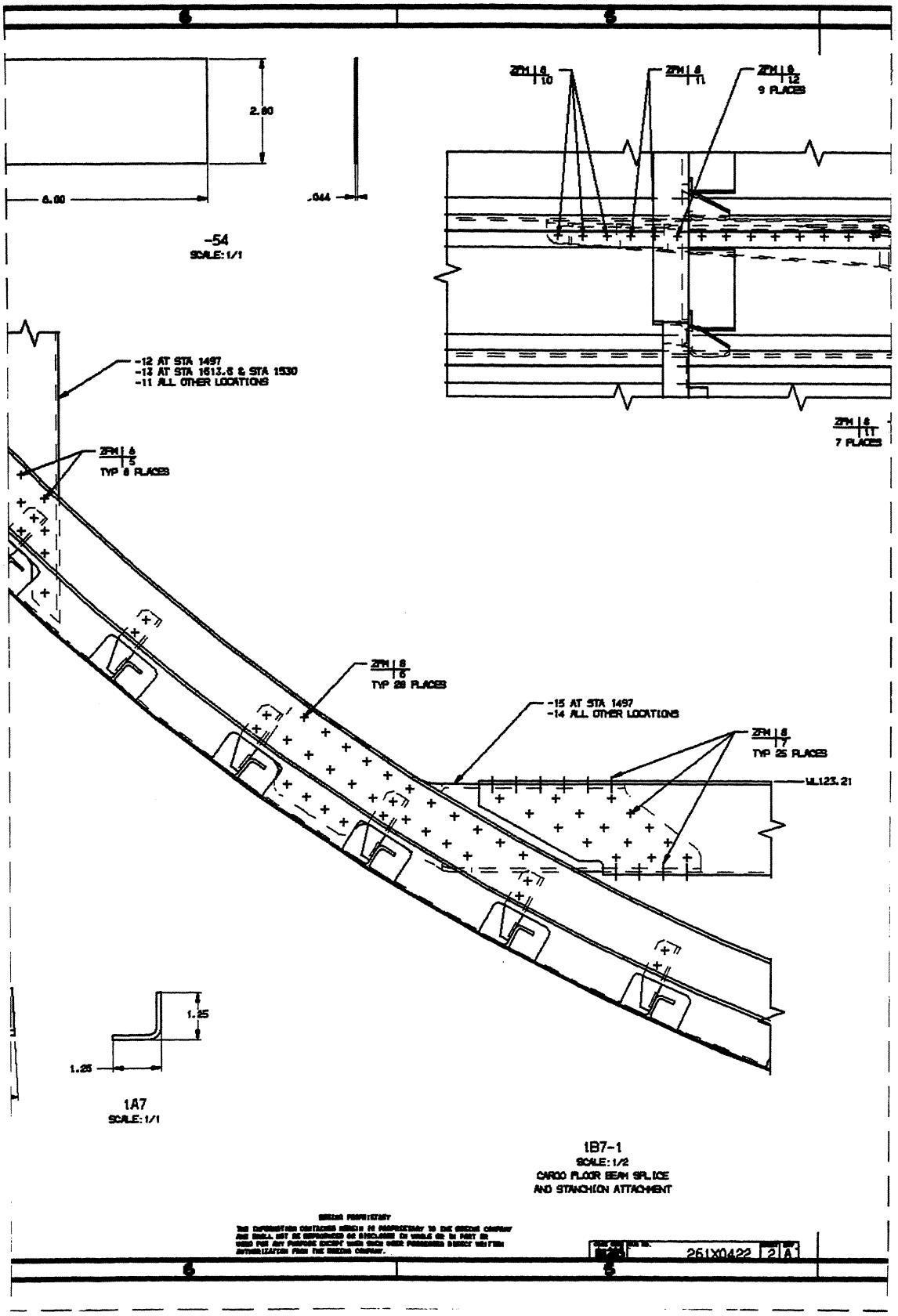
2.00
6.00
.044
-54
SCALE: 1/1
ZFH | 6 | 10
ZFH | 6 | 11
ZFH | 6 | 12
9 PLACES
ZFH | 6 | 11
7 PLACES
-12 AT STA 1497
-13 AT STA 1613.6 & STA 1530
-11 ALL OTHER LOCATIONS
ZFH | 6 | 5
TYP 8 PLACES
ZFH | 6 | 6
TYP 28 PLACES
-15 AT STA 1497
-14 ALL OTHER LOCATIONS
ZFH | 6 | 7
TYP 25 PLACES
WL123.21
1.25
1.25
1A7
SCALE: 1/1
1B7-1
SCALE: 1/2
CARGO FLOOR BEAM SPLICE
AND STANCHION ATTACHMENT
261X0422
2
A

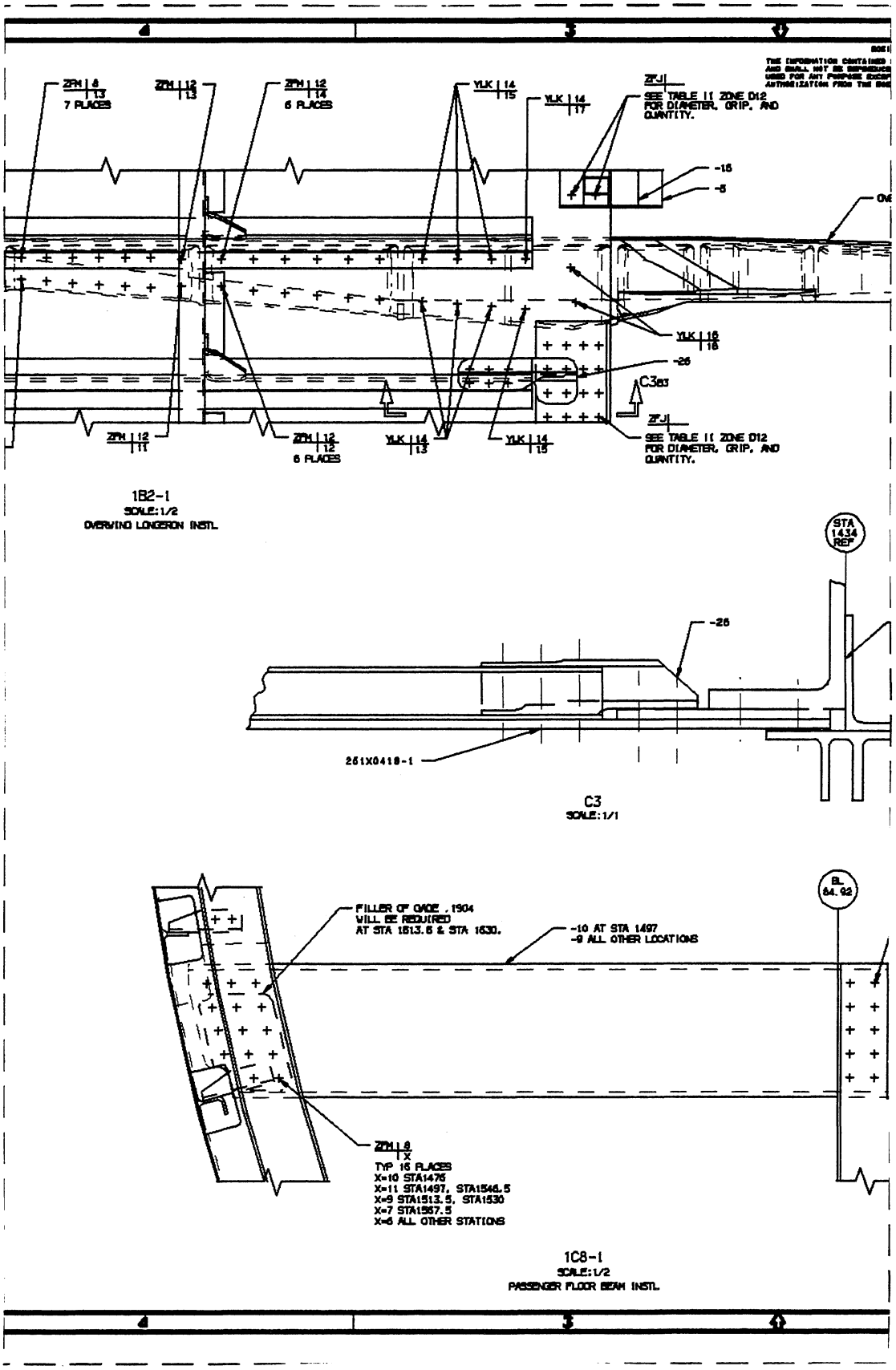
ZFH | 8 | 13
7 PLACES
ZFH | 12 | 13
ZFH | 12 | 14
6 PLACES
YLK | 14 | 15
YLK | 14 | 17
ZFJ
SEE TABLE II ZONE D12 FOR DIAMETER, GRIP, AND QUANTITY.
-15
-5
YLK | 16 | 16
-26
C3B3
ZFJ
SEE TABLE II ZONE D12 FOR DIAMETER, GRIP, AND QUANTITY.
ZFH | 12 | 11
ZFH | 12 | 12
6 PLACES
YLK | 14 | 13
YLK | 14 | 15
1B2-1
SCALE: 1/2
OVERWING LONGERON INSTL
STA 1434 REF
-26
251X0418-1
C3
SCALE: 1/1
FILLER OF GAGE .1904 WILL BE REQUIRED AT STA 1513.6 & STA 1530.
-10 AT STA 1497
-9 ALL OTHER LOCATIONS
BL 84.92
ZFH | 8 | X
TYP 16 PLACES
X=10 STA1476
X=11 STA1497, STA1546.5
X=9 STA1513.5, STA1530
X=7 STA1567.5
X=6 ALL OTHER STATIONS
1C8-1
SCALE: 1/2
PASSENGER FLOOR BEAM INSTL

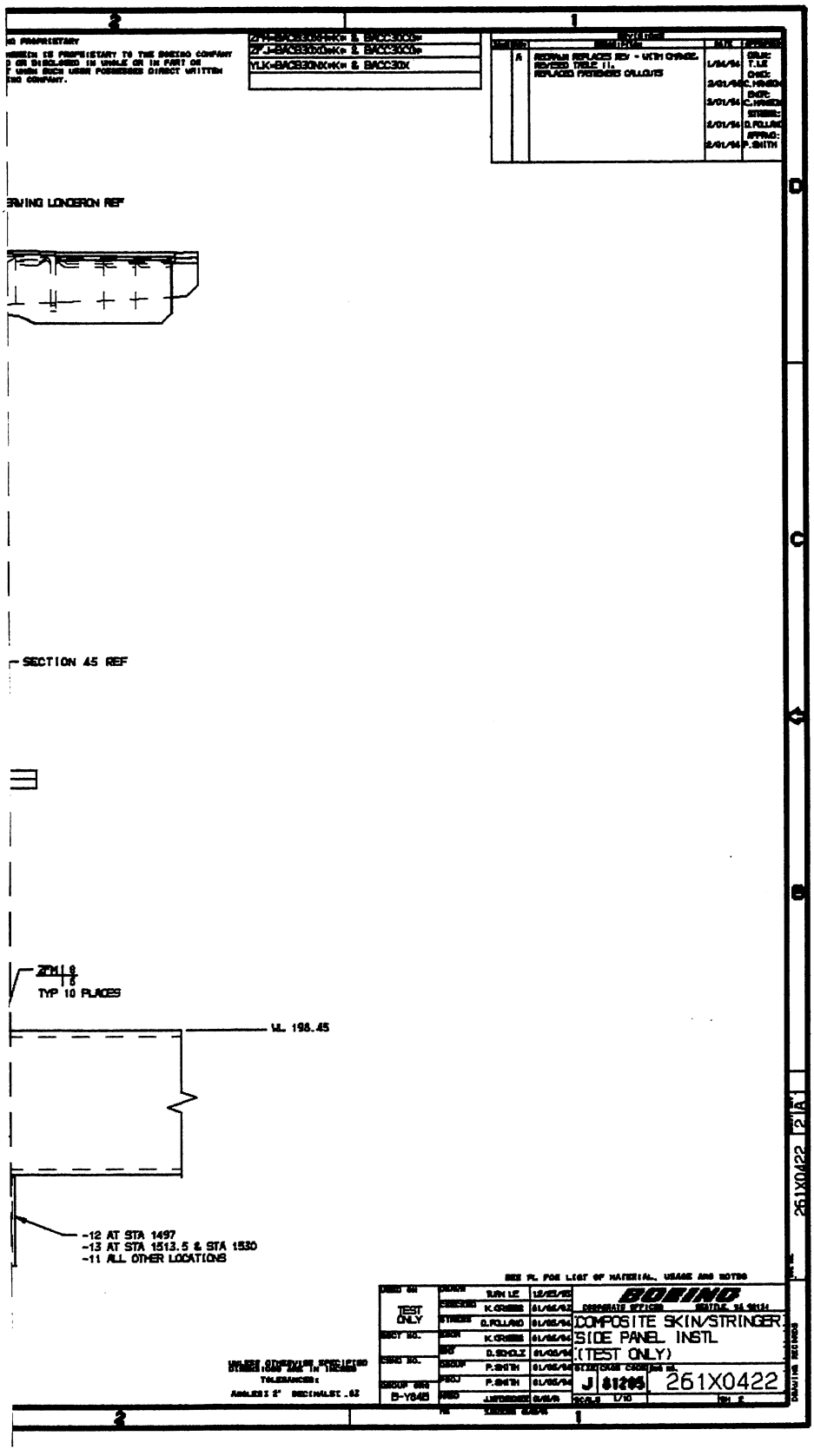
SECTION 45 REF
TYP 10 PLACES
-12 AT STA 1497
-13 AT STA 1513.5 & STA 1530
-11 ALL OTHER LOCATIONS
TEST ONLY
BOEING
COMPOSITE SKIN/STRINGER SIDE PANEL INSTL (TEST ONLY)
261X0422

B-82

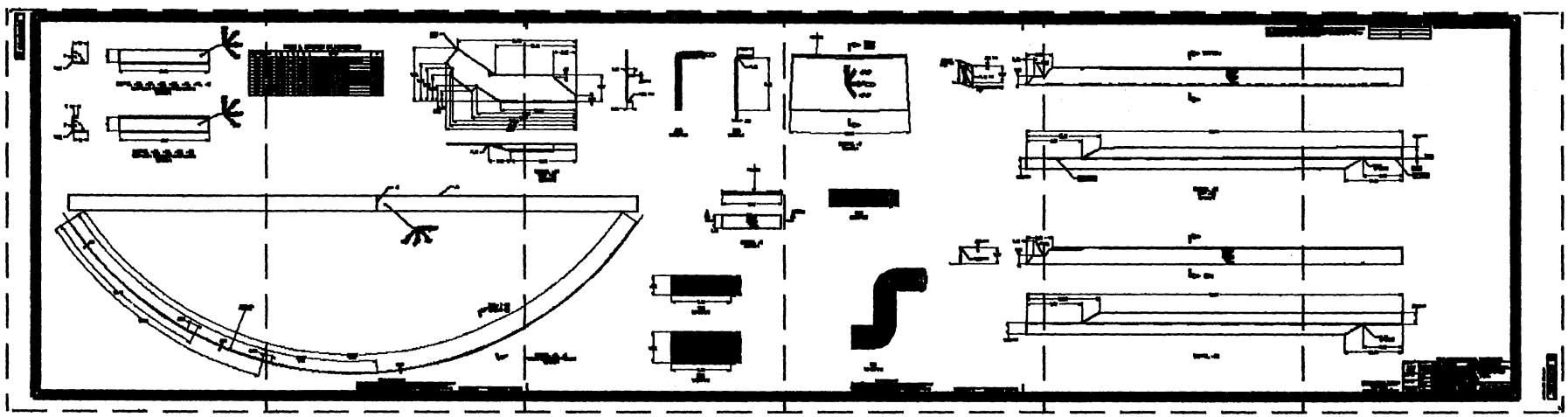

B-83 B-84 B-85 B-86 B-87 B-88

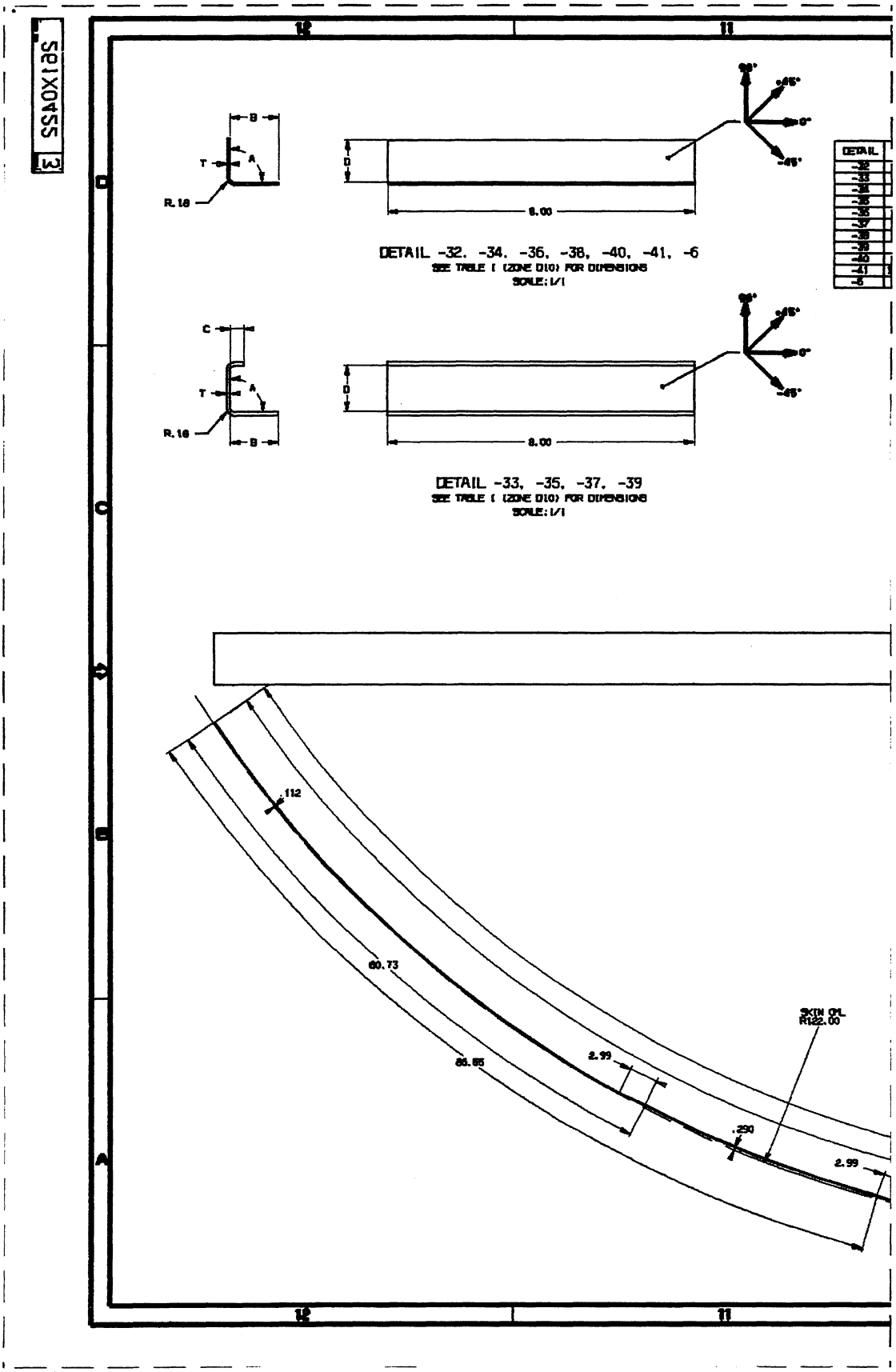

DETAIL -32, -34, -36, -38, -40, -41, -6
SEE TABLE I (ZONE D10) FOR DIMENSIONS
SCALE: 1/1
DETAIL -33, -35, -37, -39
SEE TABLE I (ZONE D10) FOR DIMENSIONS
SCALE: 1/1
R.18
8.00
.112
60.73
86.65
2.99
.290
SKIN CPL
R122.00

TABLE I. STRINGER SPLICE DETAILS

A	B	C	D	LAYUP	T
90°	1.30	—	1.16	(0/90F,90,0,45,-45,0,90,0/90F)	.0656
90°	1.30	.30	.96	(0/90F,90,0,45,-45,0,90,0/90F)	.0656
90°	1.26	—	1.16	(0/90F,90,0,45,-45,0)s	.0984
90°	1.26	.36	1.20	(0/90F,90,0,45,-45,0)s	.0984
90°	1.26	—	1.16	(0/90F,0,90,0,45,-45,0,90,0,0/90F)	.0822
90°	1.26	.26	1.20	(0/90F,0,90,0,45,-45,0,90,0,0/90F)	.0822
90°	1.26	—	1.16	(0/90F,0,90,0,45,-45,0,90,0,0/90F)	.0822
90°	1.26	.26	.96	(0/90F,0,90,0,45,-45,0,90,0,0/90F)	.0822
79.82°	1.26	—	1.40	(0/90F,90,0,45,-45,0)s	.0984
80.38°	1.26	—	1.40	(0/90F,90,0,45,-45,0)s	.0984
90°	1.10	—	1.10	(0/90F,90,0,45,-45,0)s	.0984

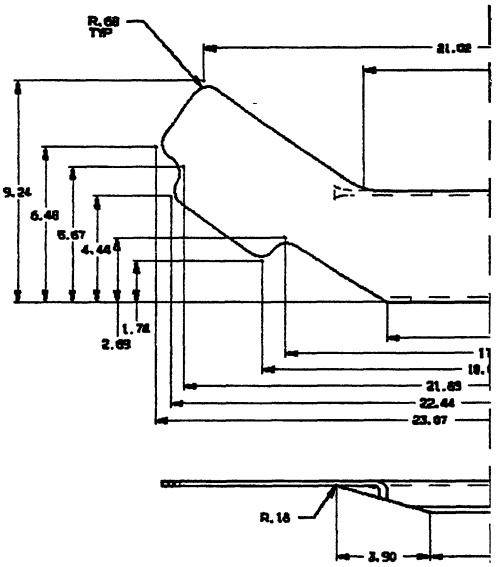

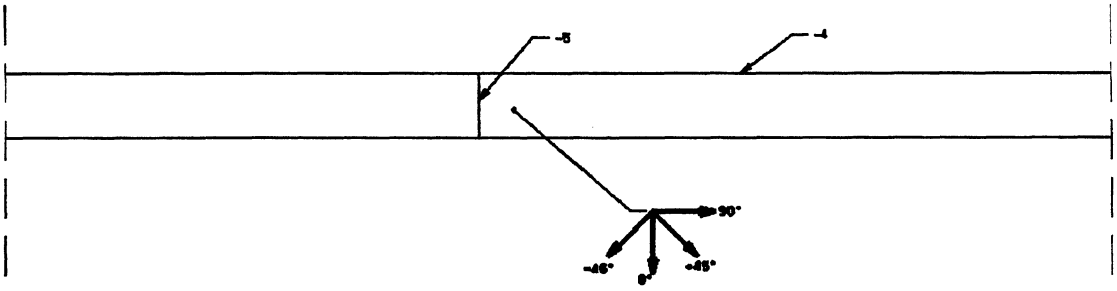

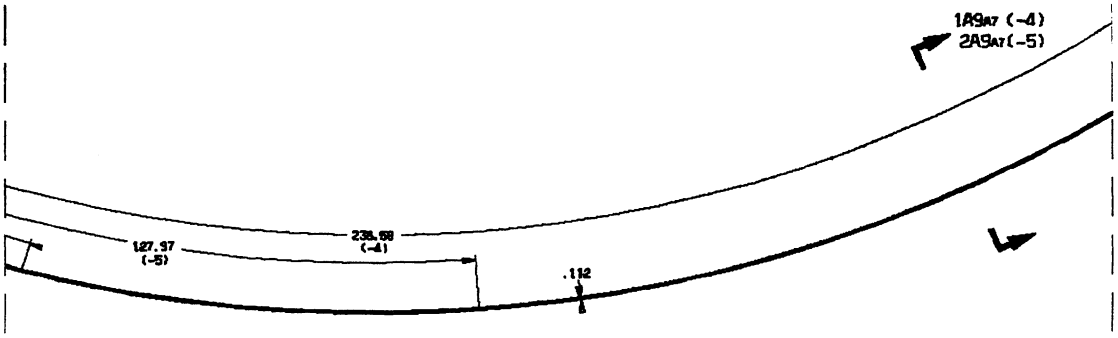

BOEING PROPRIETARY
THE INFORMATION CONTAINED HEREIN IS PROPRIETARY TO THE BOEING COMPANY AND SHALL NOT BE REPRODUCED OR DISCLOSED IN WHOLE OR IN PART OR USED FOR ANY PURPOSE EXCEPT WHEN SUCH RIGHTS ARE EXPRESSLY GRANTED IN WRITING BY THE BOEING COMPANY.

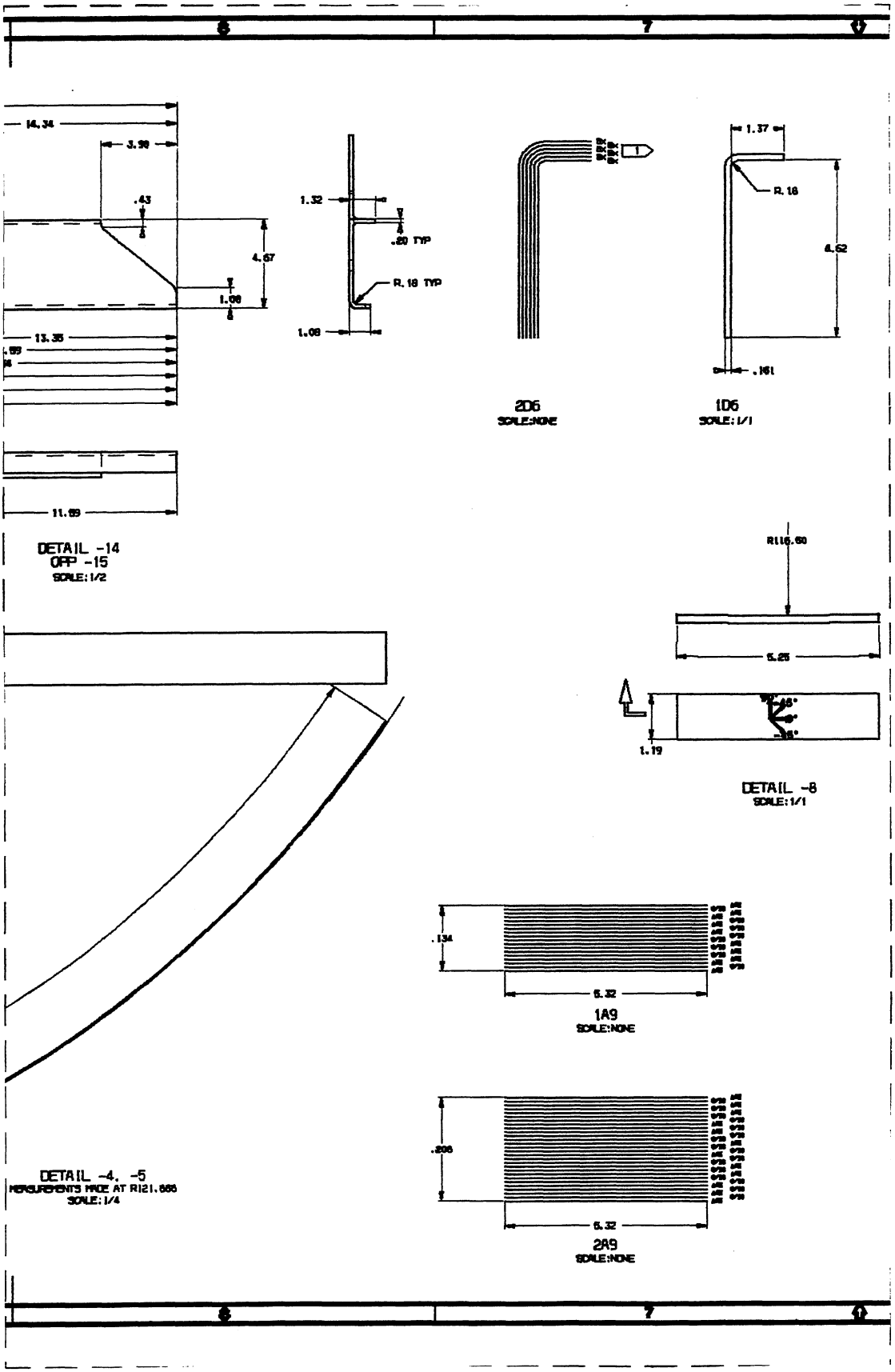
14.34
3.98
.43
4.67
1.08
13.35
11.69
1.32
.20 TYP
R.18 TYP
1.08
2D6
SCALE:NONE
1.37
R.18
4.62
.161
1D6
SCALE:1/1
DETAIL -14
OPP -15
SCALE:1/2
R116.60
5.25
1.19
DETAIL -8
SCALE:1/1
DETAIL -4, -5
MEASUREMENTS MADE AT R121.666
SCALE:1/4
.134
5.32
1A9
SCALE:NONE
.206
5.32
2A9
SCALE:NONE

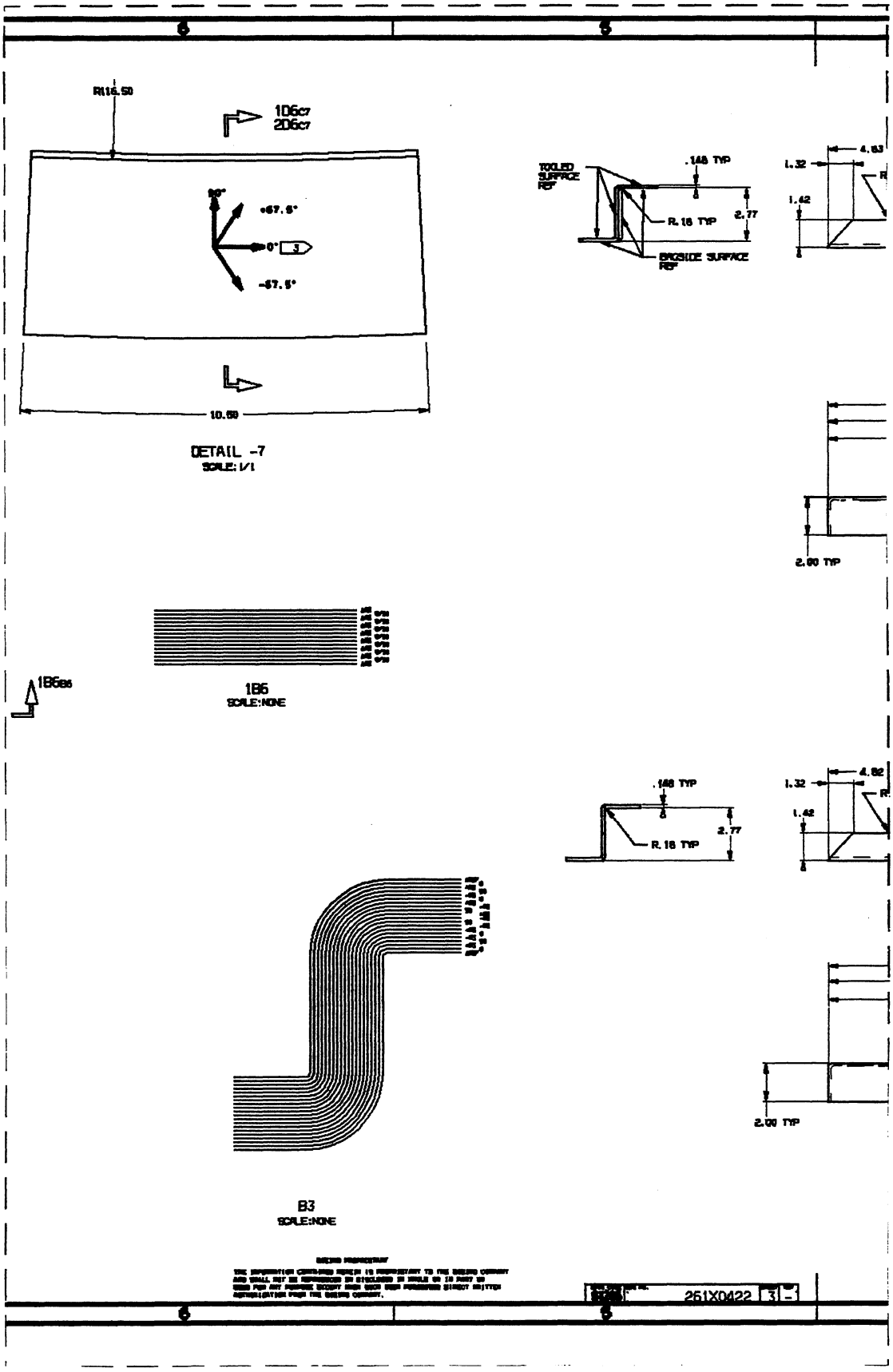

DETAIL -7
SCALE: 1/1

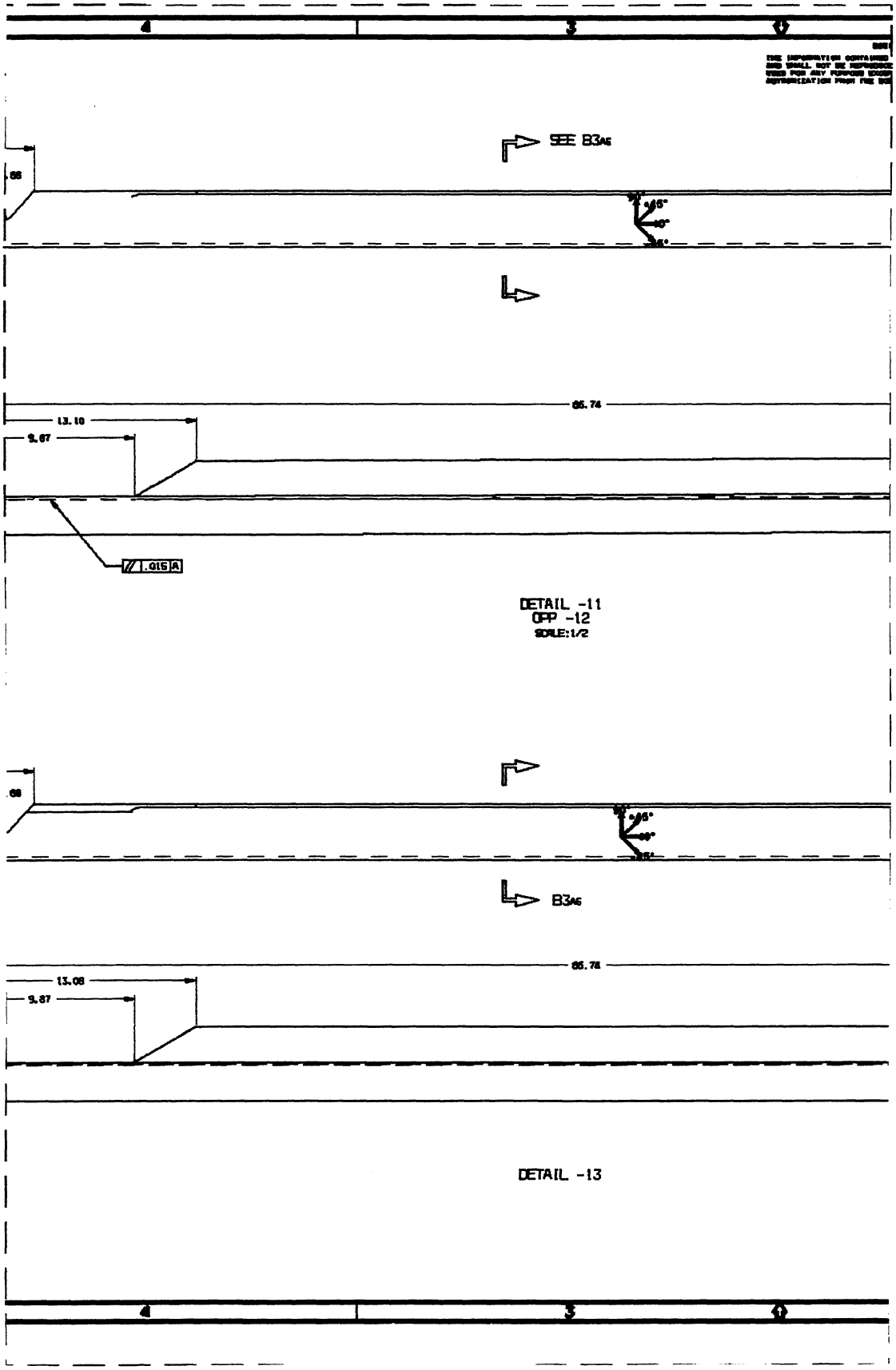
SEE B3A6
86.74
13.10
9.87
.015 A
DETAIL -11
OPP -12
SCALE:1/2
B3A6
86.74
13.08
9.87
DETAIL -13

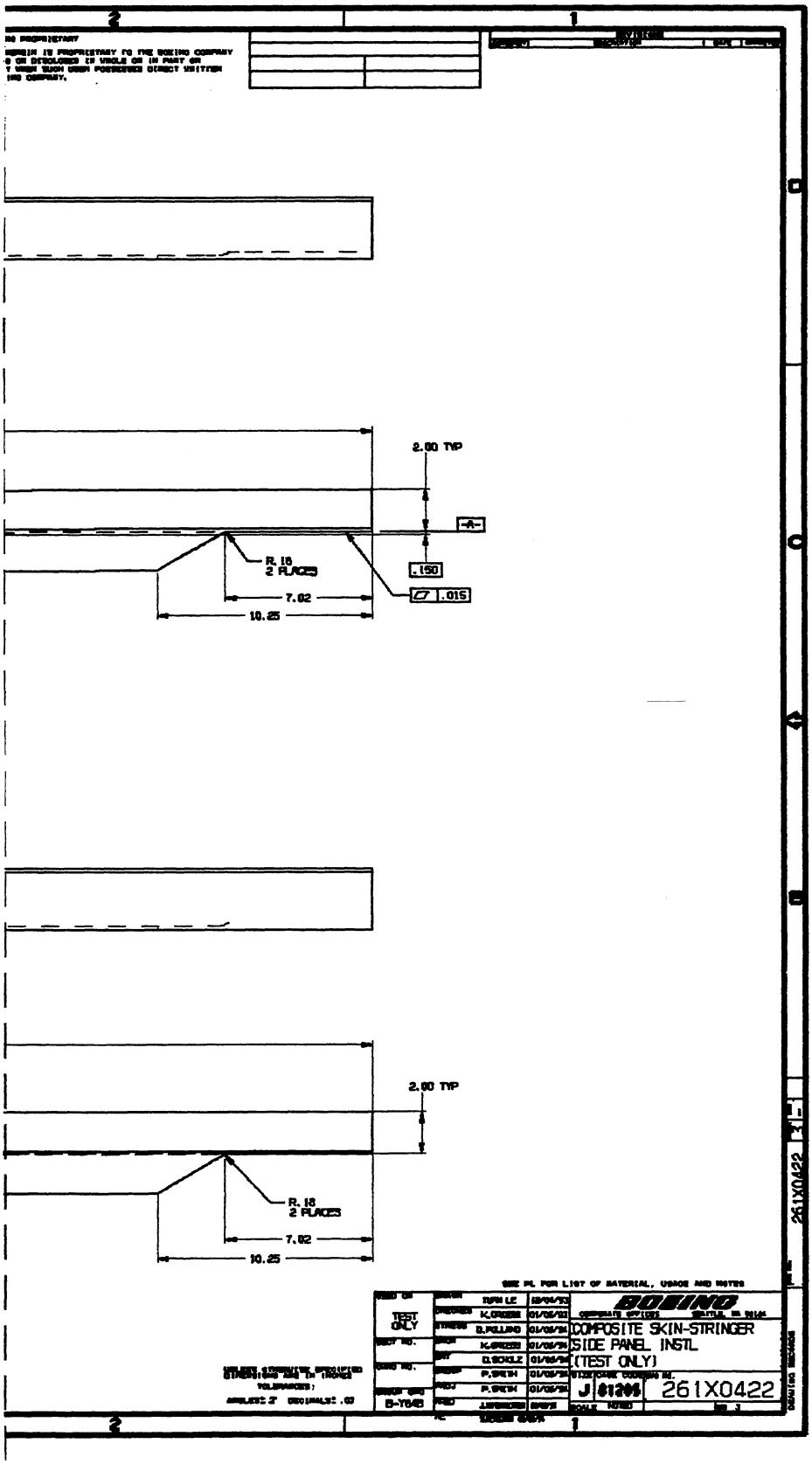
2.00 TYP
-A-
R. 18
2 PLACES
.150
.015
7.02
10.25
2.00 TYP
R. 18
2 PLACES
7.02
10.25
TEST ONLY
BOEING
COMPOSITE SKIN-STRINGER
SIDE PANEL INSTL
(TEST ONLY)
J 61201
261X0422
261X0422

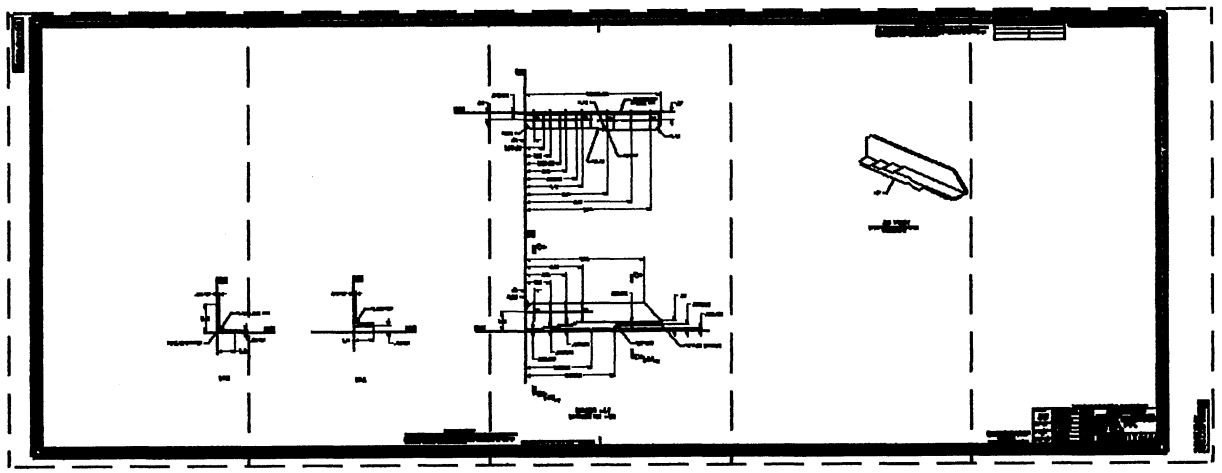

B-90 B-91 B-92 B-93 B-94

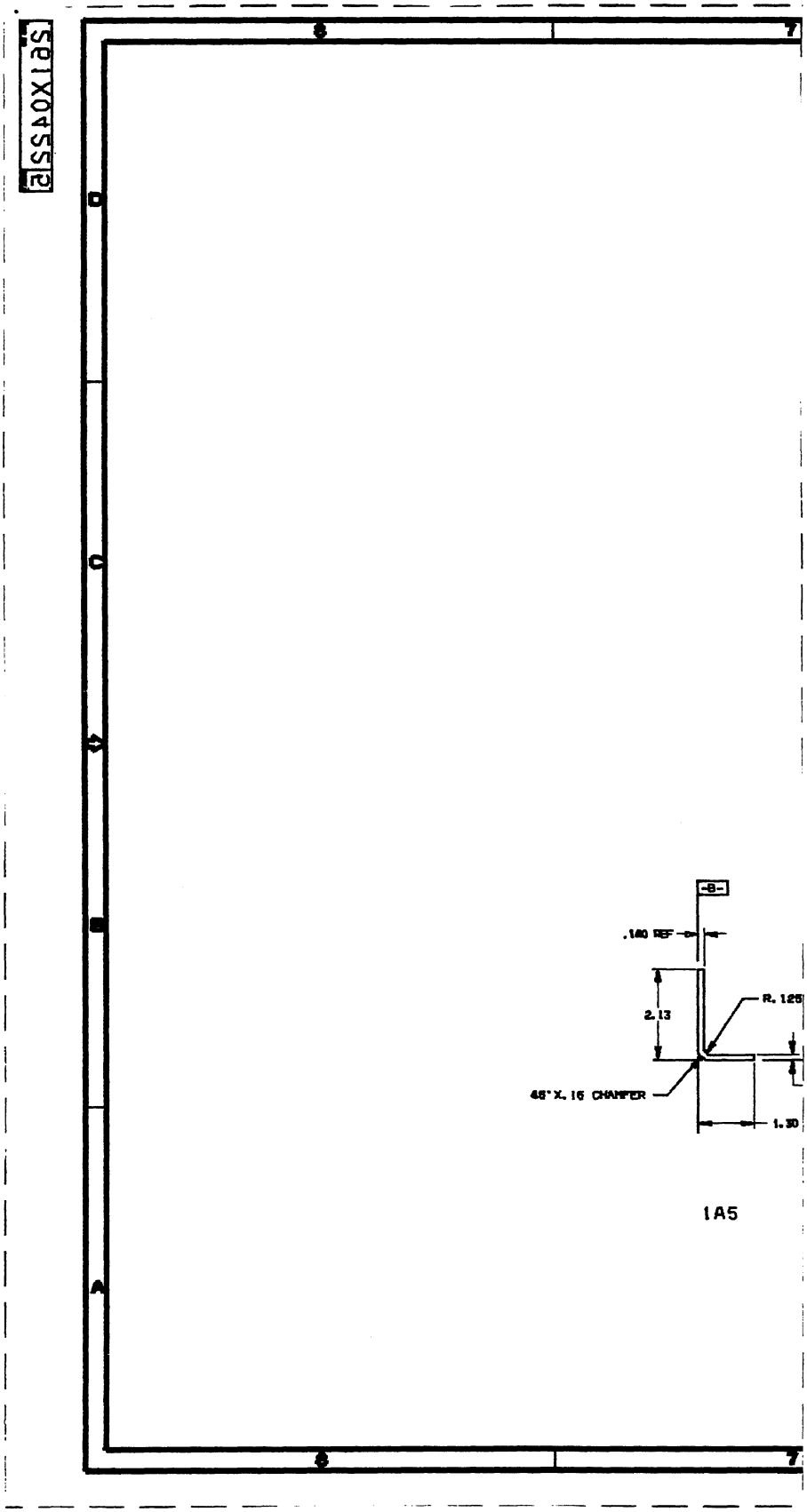

-B-
.140 REF
2.13
R. 125
45° X .16 CHAMFER
1.30
1A5

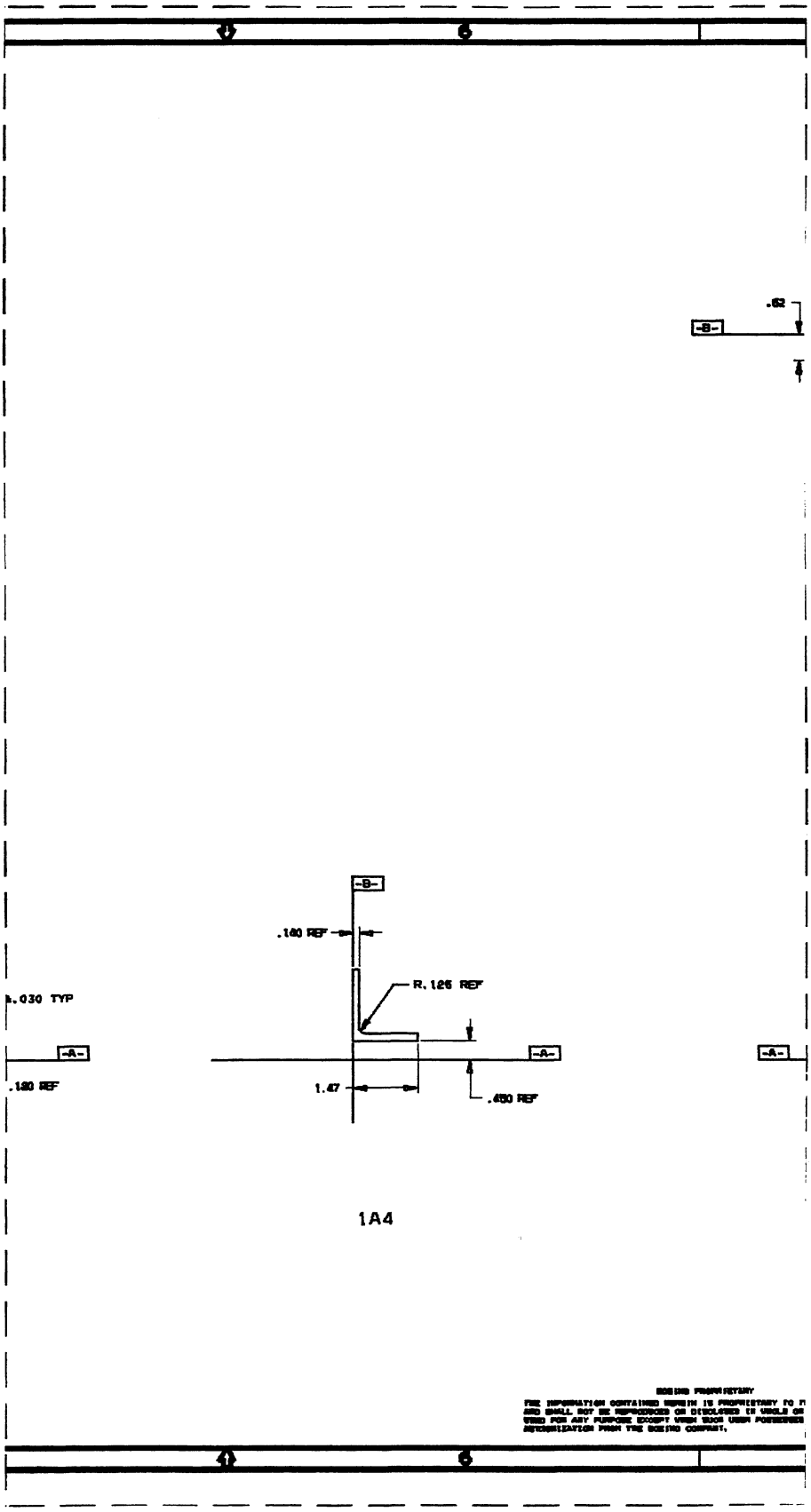

1A4

BOEING PROPRIETARY
THE INFORMATION CONTAINED HEREIN IS PROPRIETARY TO T
AND SHALL NOT BE REPRODUCED OR DISCLOSED IN WHOLE OR
USED FOR ANY PURPOSE EXCEPT WHEN SUCH USE POSSESSES
AUTHORIZATION FROM THE BOEING COMPANY.

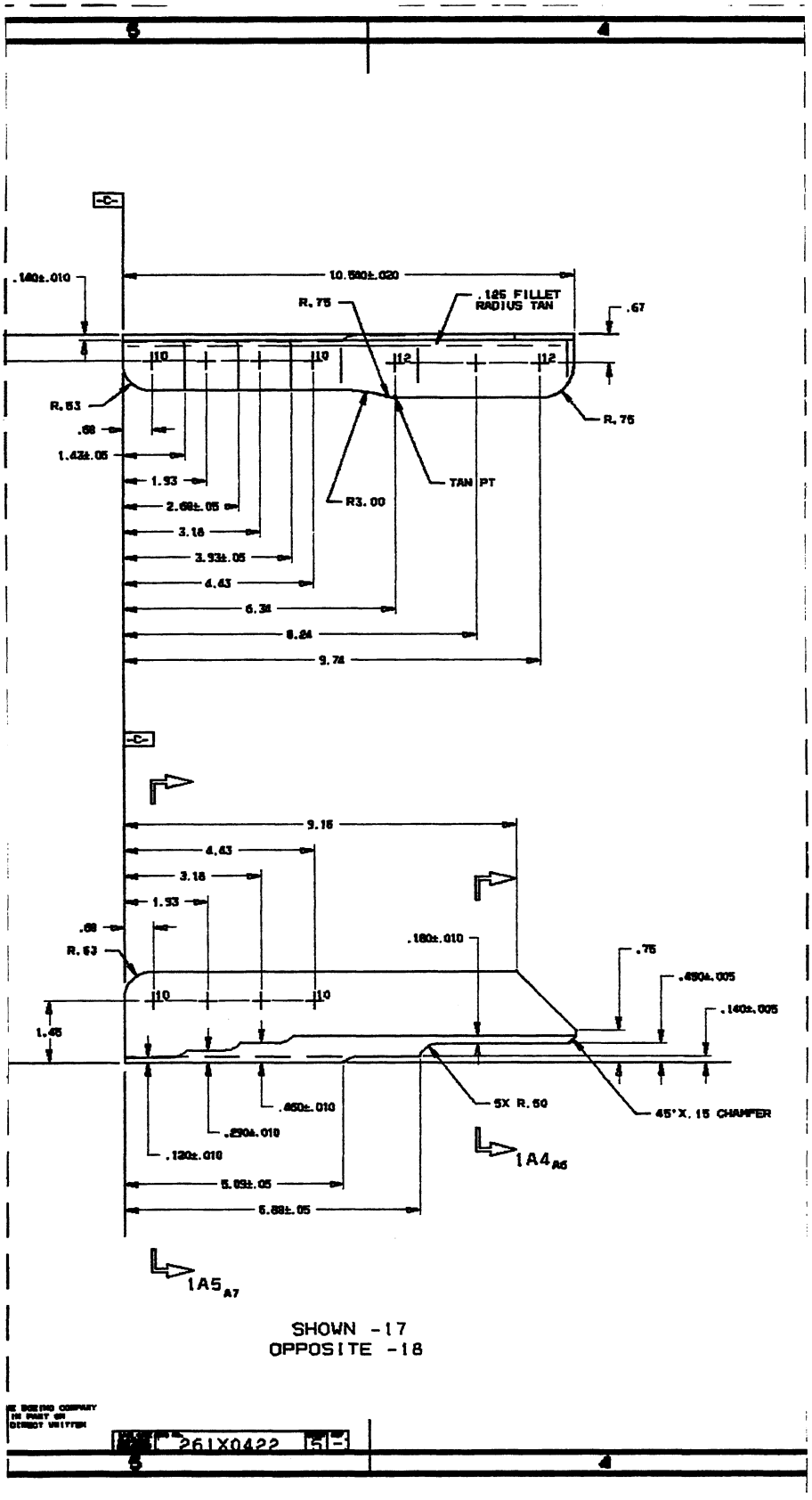

SHOWN -17
OPPOSITE -18

THE BOEING COMPANY
NO PART OF
DIRECT WRITTEN

261X0422 5

BOEING PROPRIETARY

THIS DOCUMENT/ITEM CONTAINED HEREIN IS PROPRIETARY TO THE BOE
AND SHALL NOT BE REPRODUCED OR DISCLOSED IN WHOLE OR IN PA
USED FOR ANY PURPOSE EXCEPT WHEN SUCH USER POSSESSES DIRE
AUTHORIZATION FROM THE BOEING COMPANY.

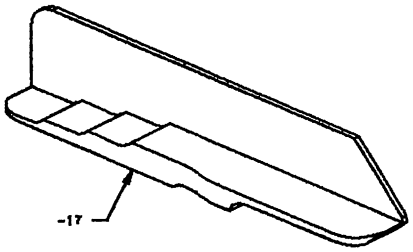

3D VIEW
ENGINEERING REFERENCE
SCALE: NONE

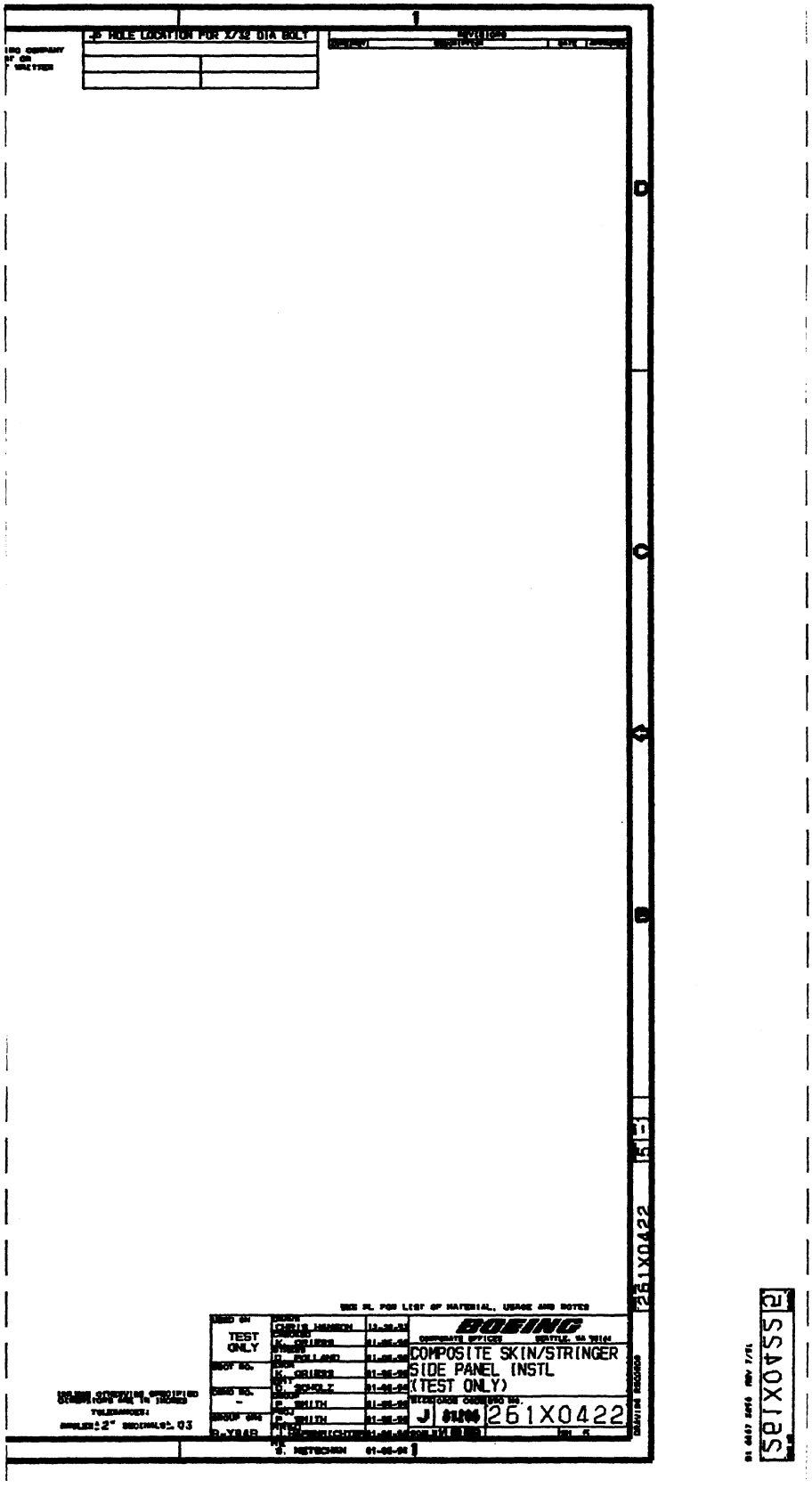
.25 HOLE LOCATION FOR 7/32 DIA BOLT
REVISIONS
TEST ONLY
BOEING
COMPOSITE SKIN/STRINGER SIDE PANEL INSTL (TEST ONLY)
J 81206
261X0422
261X0422

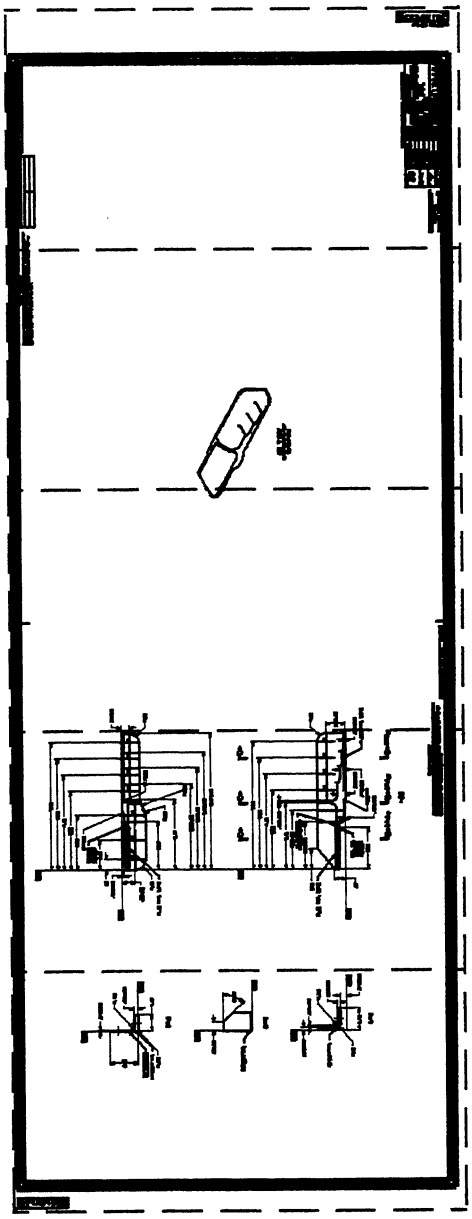

B-100

B-99

B-98

B-97

B-96

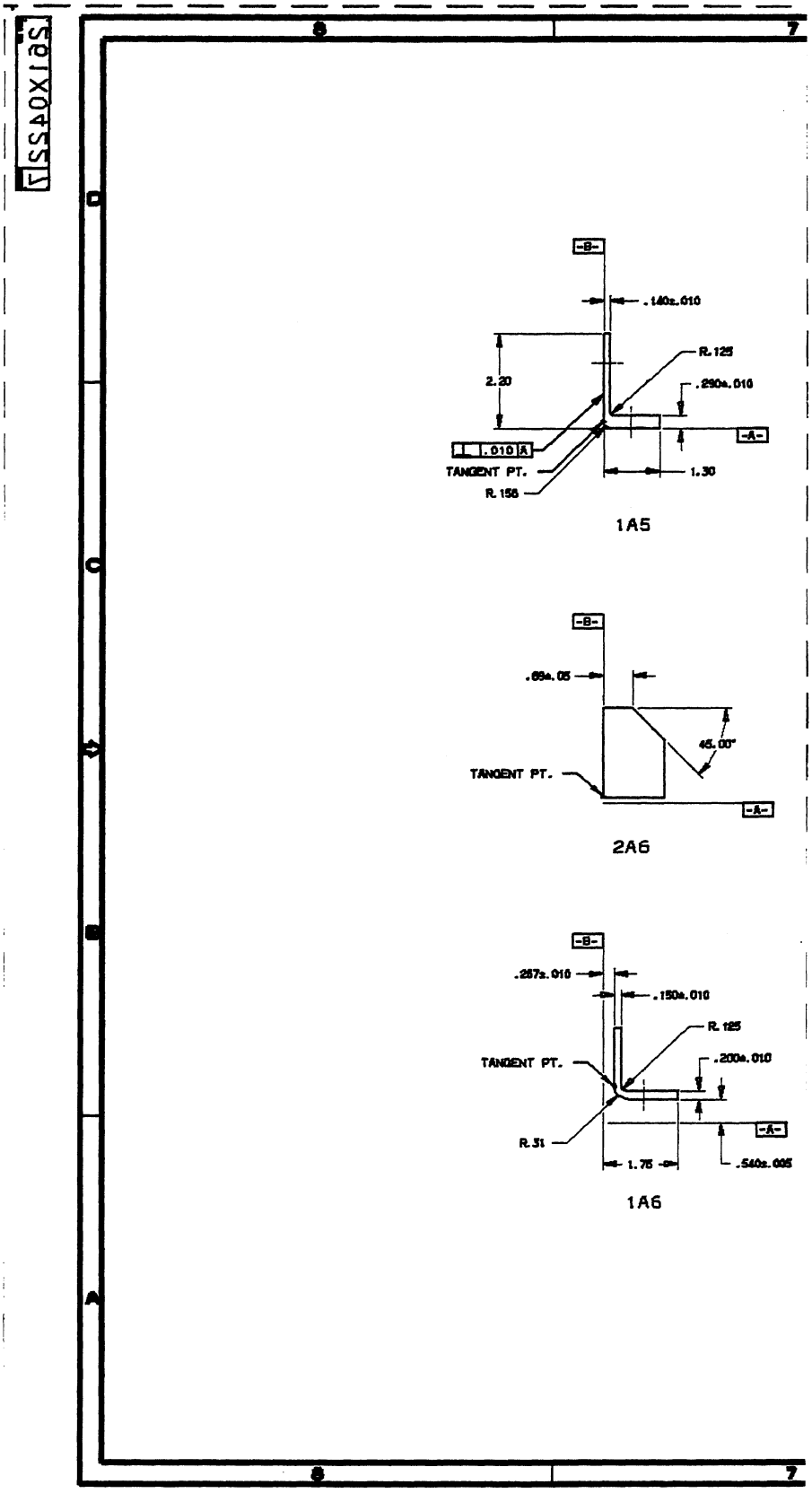
-B-
.140±.010
R.125
2.20
.290±.010
-A-
⊥ .010 A
TANGENT PT.
1.30
R.156
-B-
.69±.05
45.00°
TANGENT PT.
-A-
-B-
.267±.010
.150±.010
R.125
TANGENT PT.
.200±.010
-A-
R.31
1.75
.540±.005

1A5

2A6

1A6

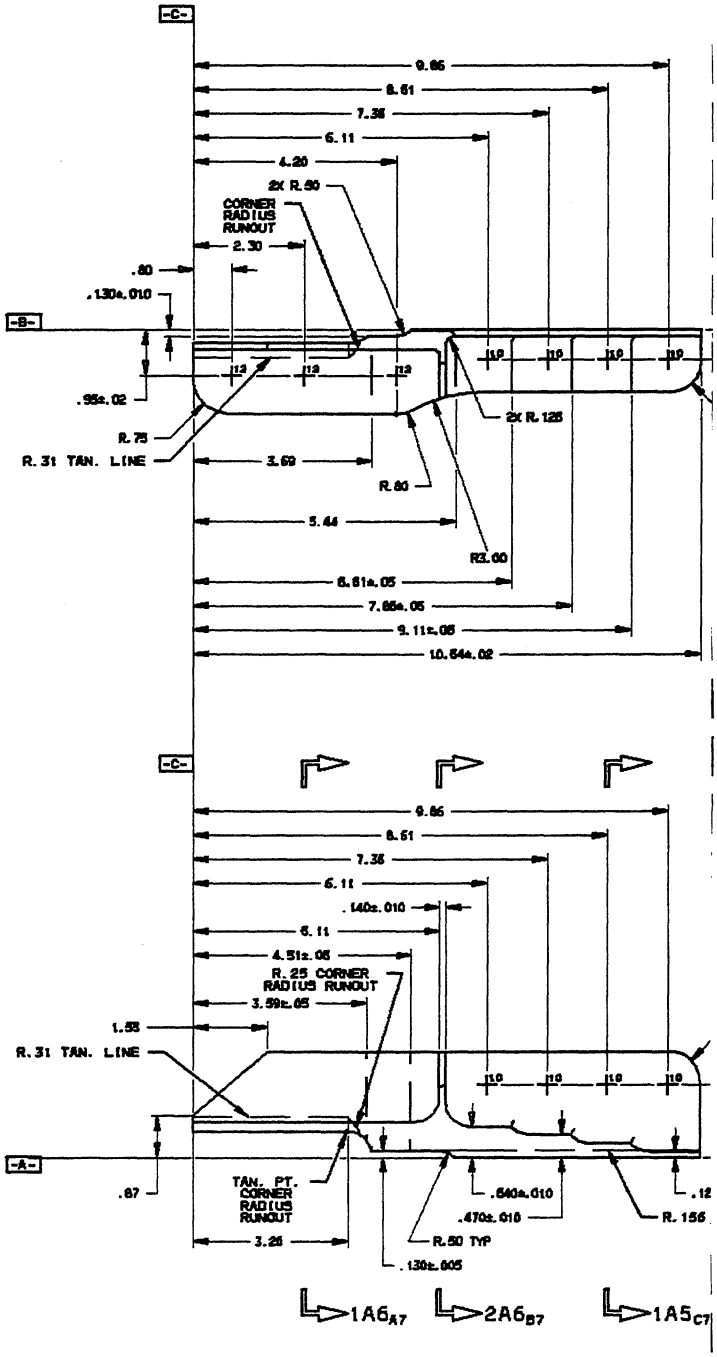

-21

BOEING PROPRIETARY
THE INFORMATION CONTAINED HEREIN IS PROPRIETARY TO TH
AND SHALL NOT BE REPRODUCED OR DISCLOSED IN WHOLE OR
USED FOR ANY PURPOSE EXCEPT WHEN SUCH USE PERMISSION
AUTHORIZATION FROM THE BOEING COMPANY.

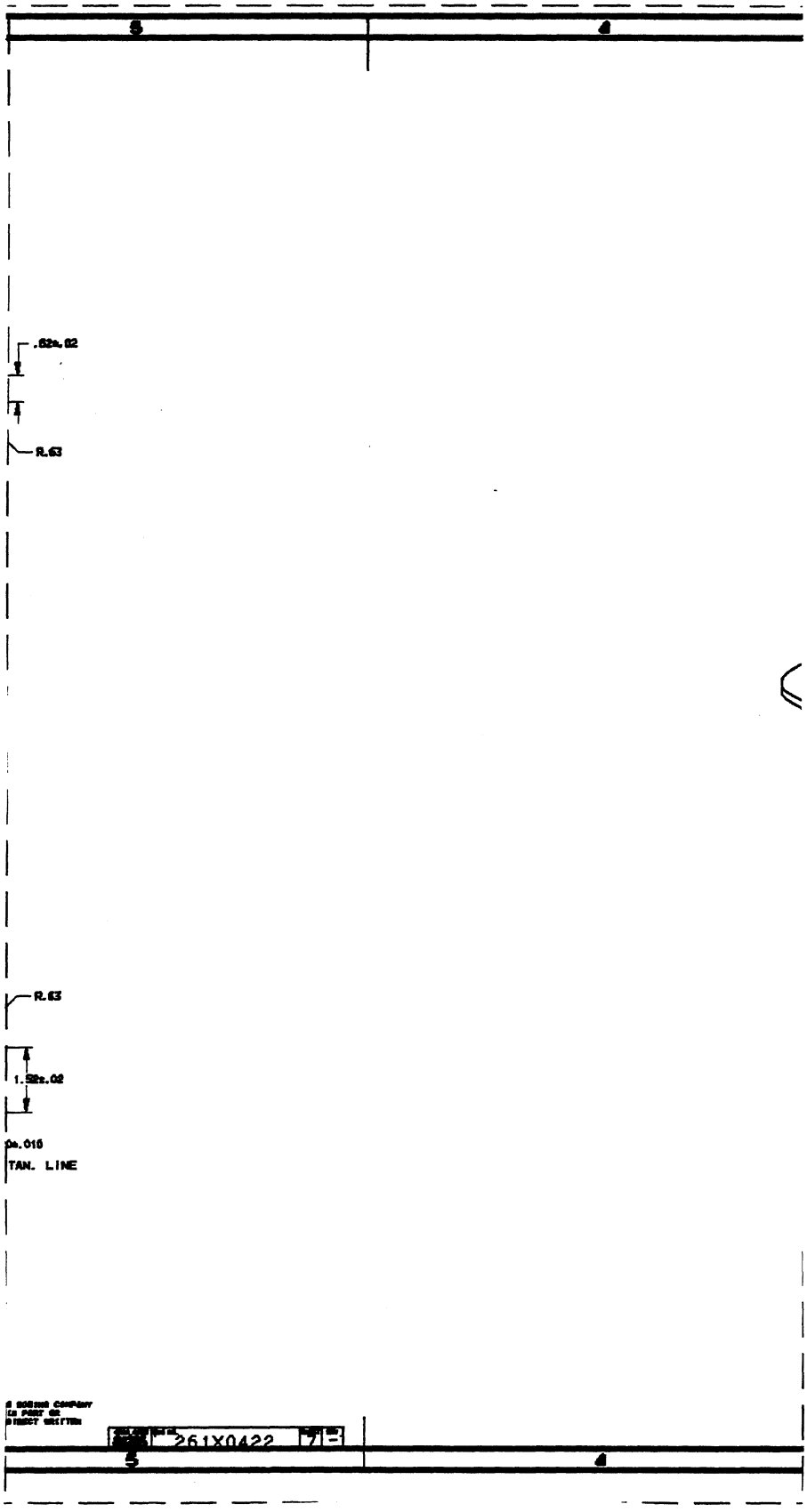
.62±.02
R.63
R.63
1.52±.02
±.010
TAN. LINE
261X0422

BOEING PROPRIETARY
THE INFORMATION CONTAINED HEREIN IS PROPRIETARY TO THE BOE
AND SHALL NOT BE REPRODUCED OR DISCLOSED IN WHOLE OR IN PA
USED FOR ANY PURPOSE EXCEPT WHEN SUCH USES FURNISHED BOEIC
AUTHORIZATION FROM THE BOEING COMPANY.

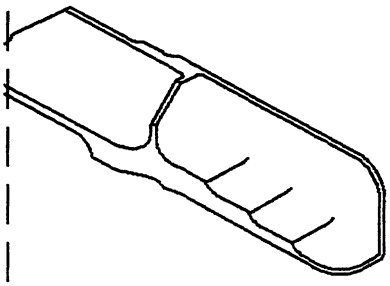

3D VIEW
ENGINEERING REF
SCALE:NONE

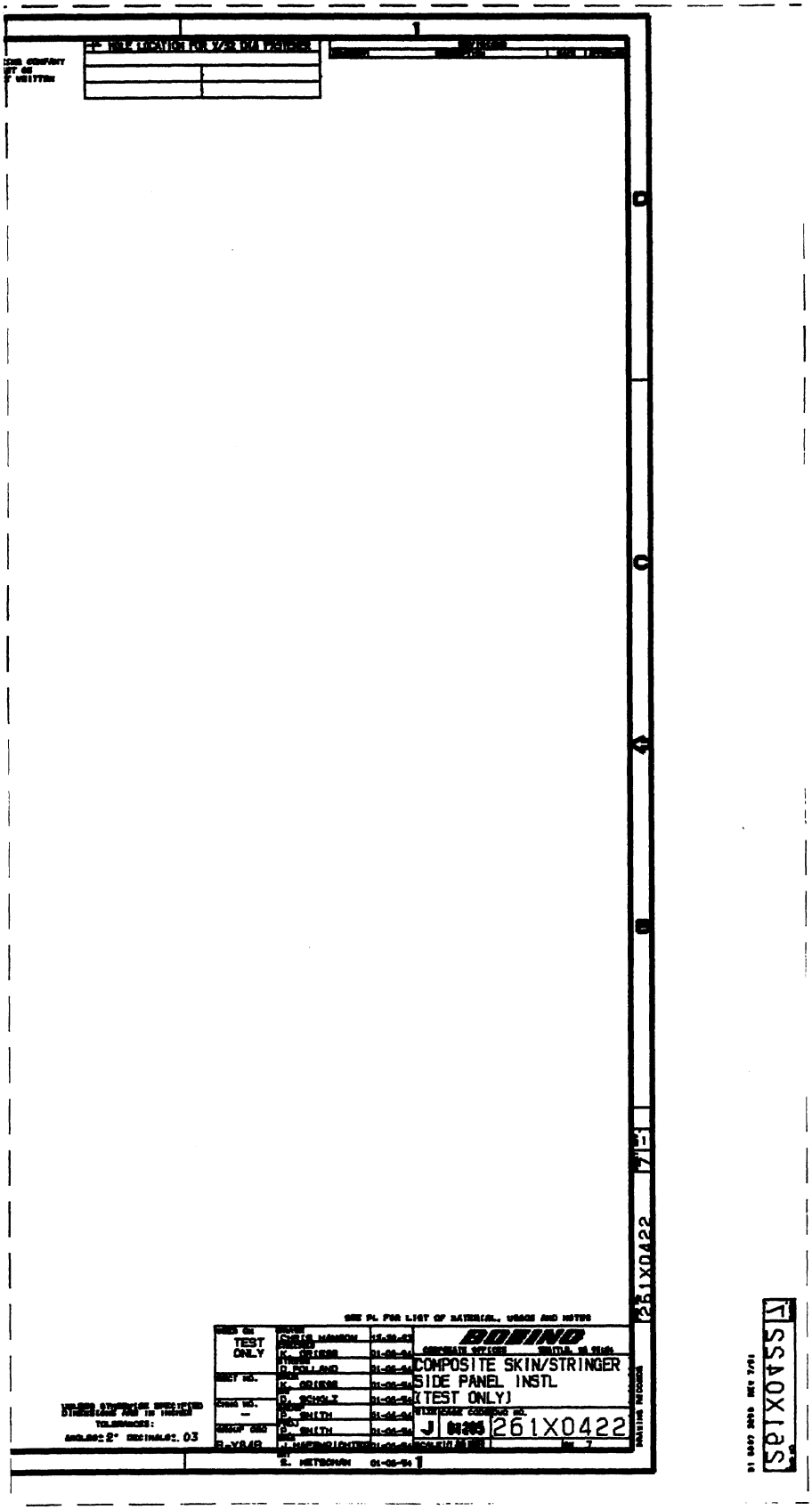
TEST ONLY
BOEING
COMPOSITE SKIN/STRINGER SIDE PANEL INSTL (TEST ONLY)
J 9205 261X0422
261X0422

B-101

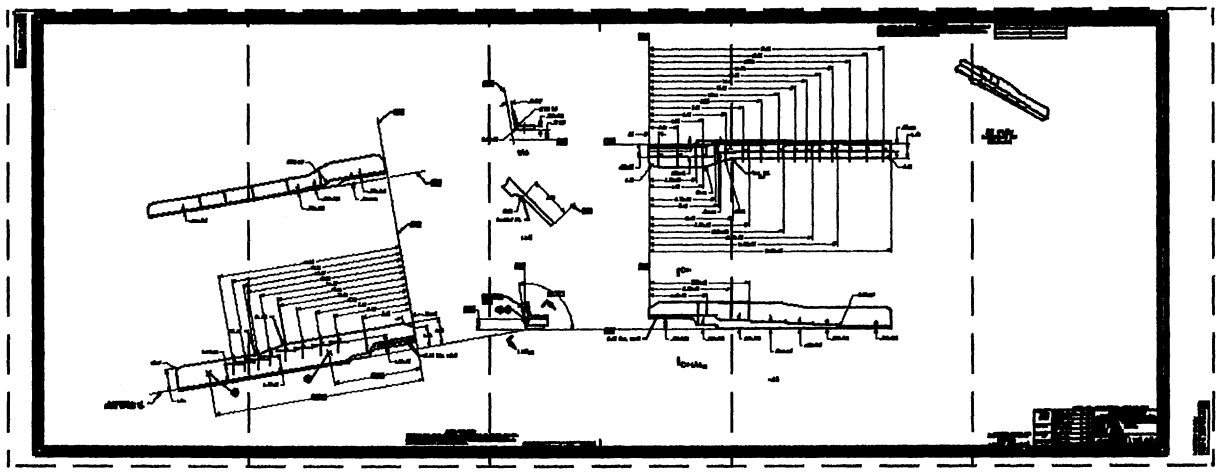

B-102 B-103 B-104 B-105 B-106

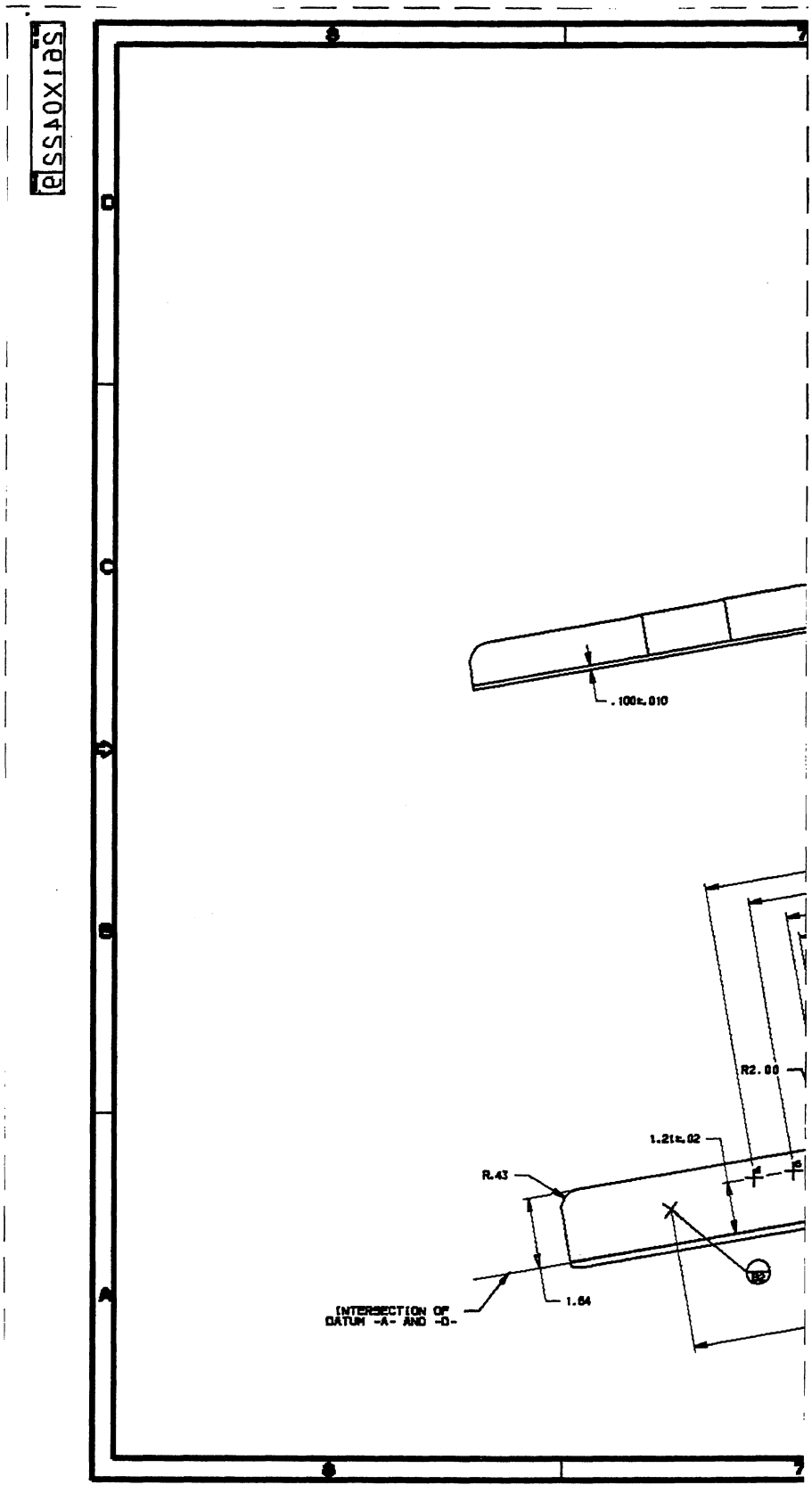
.100±.010
R2.00
1.21±.02
R.43
1.64
INTERSECTION OF
DATUM -A- AND -D-

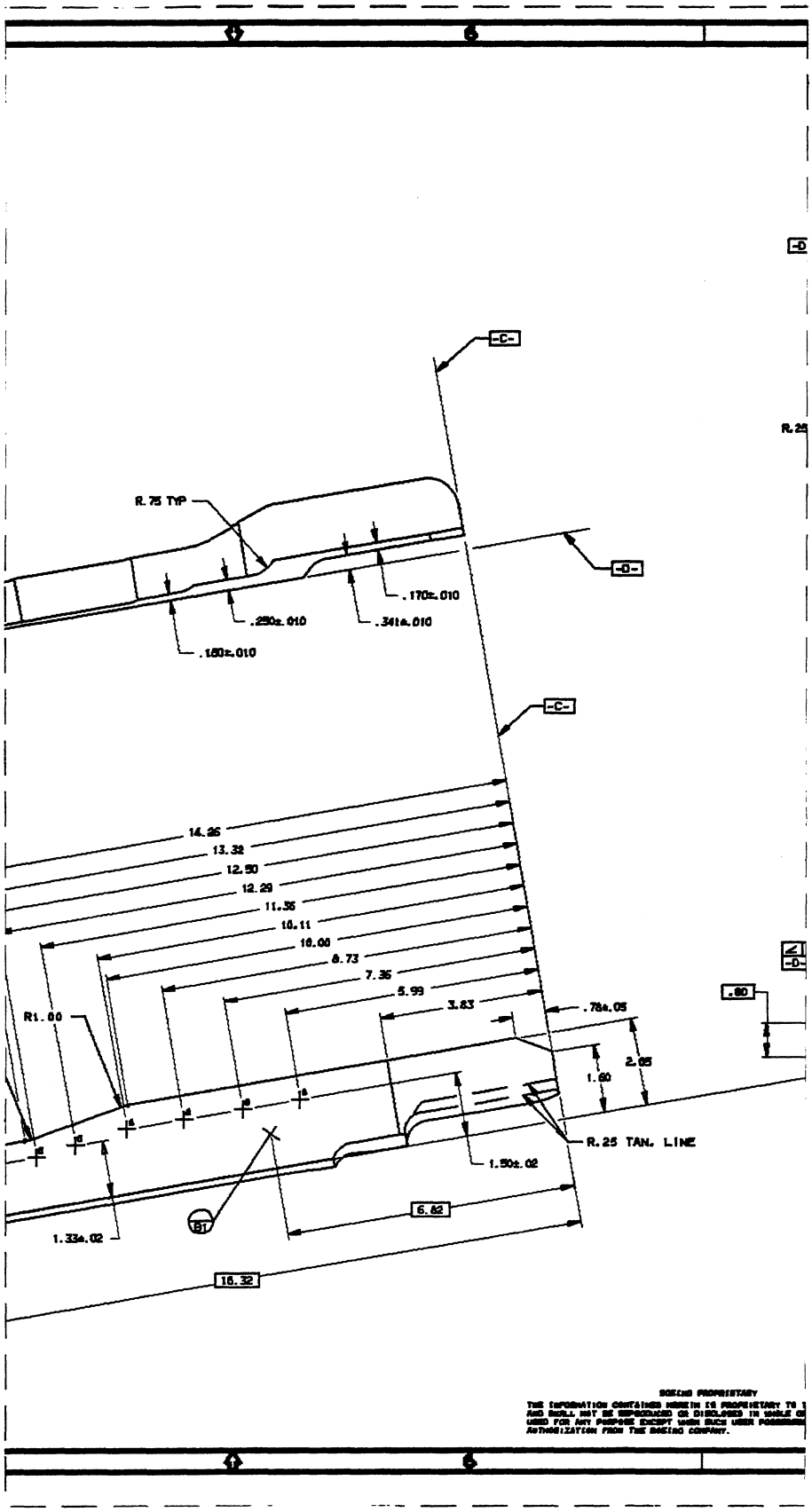

-C-
R.75 TYP
-D-
.170±.010
.250±.010
.341±.010
.180±.010
-C-
14.26
13.32
12.50
12.29
11.36
10.11
10.00
8.73
7.36
5.99
3.83
.78±.05
R1.00
2.05
1.60
R.25 TAN. LINE
1.50±.02
6.82
1.33±.02
B1
16.32
.80
SOEING PROPRIETARY

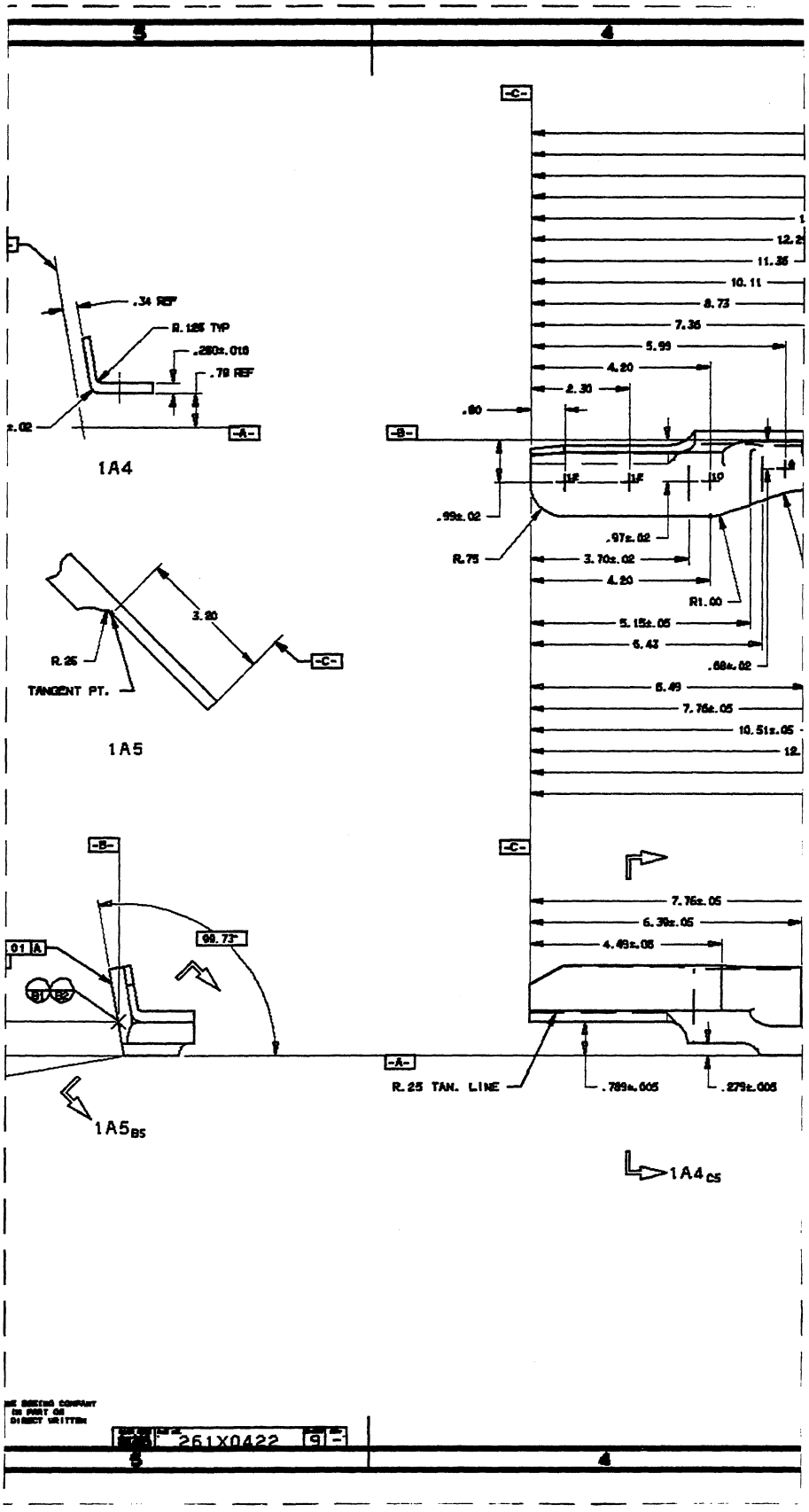
.34 REF
R.125 TYP
.280±.010
.78 REF
-A-
1A4
3.20
R.25
TANGENT PT.
-C-
1A5
-C-
-B-
.80
12.2
11.35
10.11
8.73
7.36
5.99
4.20
2.30
.99±.02
R.75
.97±.02
3.70±.02
4.20
R1.00
5.15±.05
5.43
.68±.02
6.49
7.76±.05
10.51±.05
12.
-B-
01 A
99.73°
B1
B2
-A-
R.25 TAN. LINE
.789±.005
.279±.005
7.76±.05
6.36±.05
4.49±.05
1A5BS
1A4CS
261X0422
9

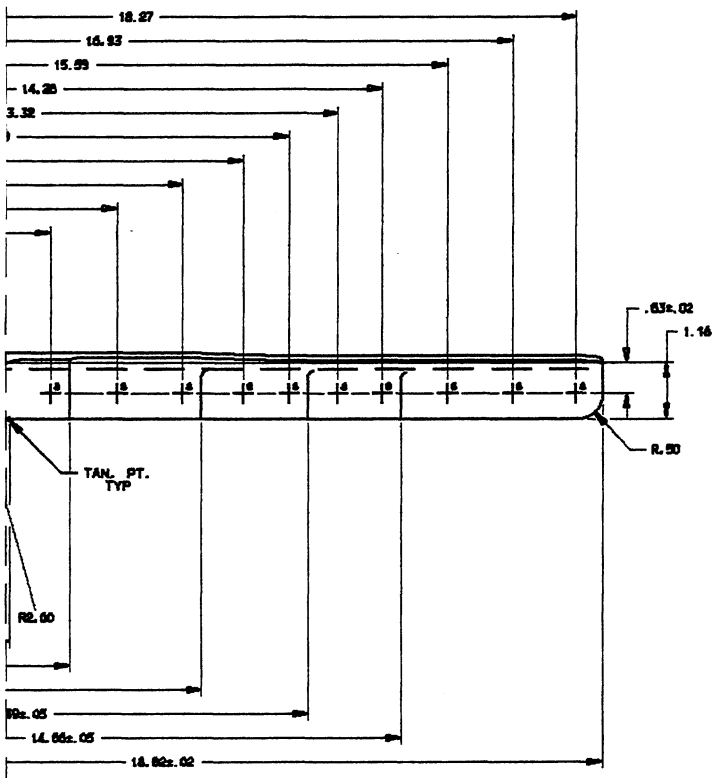
18.27
15.93
15.59
14.25
.63±.02
1.16
R.50
TAN. PT.
TYP
R2.60
14.66±.05
18.62±.02

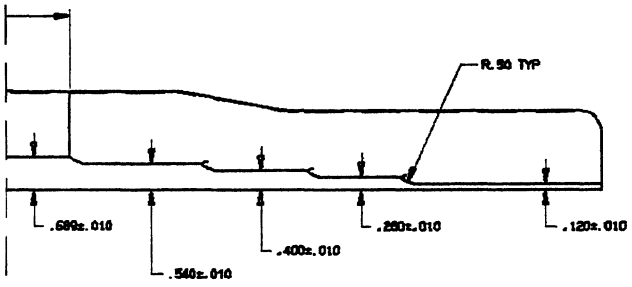
R.50 TYP
.699±.010
.540±.010
.400±.010
.260±.010
.120±.010

-23

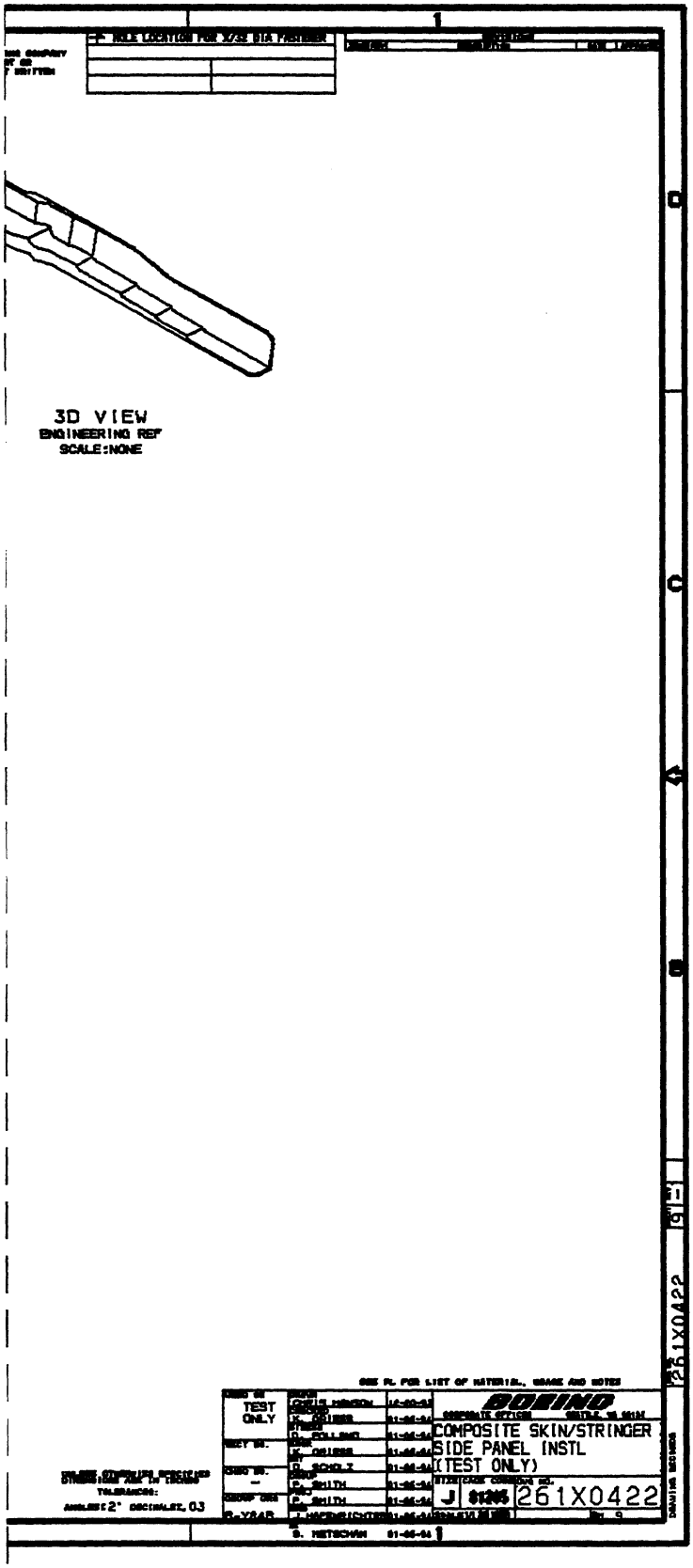
3D VIEW
ENGINEERING REF
SCALE:NONE
TEST ONLY
BOEING
COMPOSITE SKIN/STRINGER
SIDE PANEL INSTL
(TEST ONLY)
J 81205 261X0422
261X0422

B-107

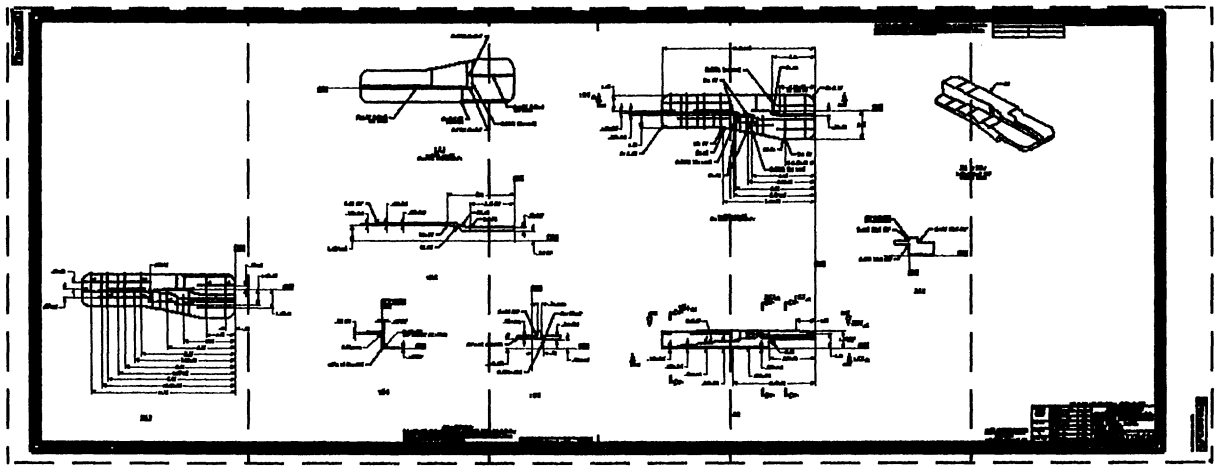

B-108 B-109 B-110 B-111 B-112

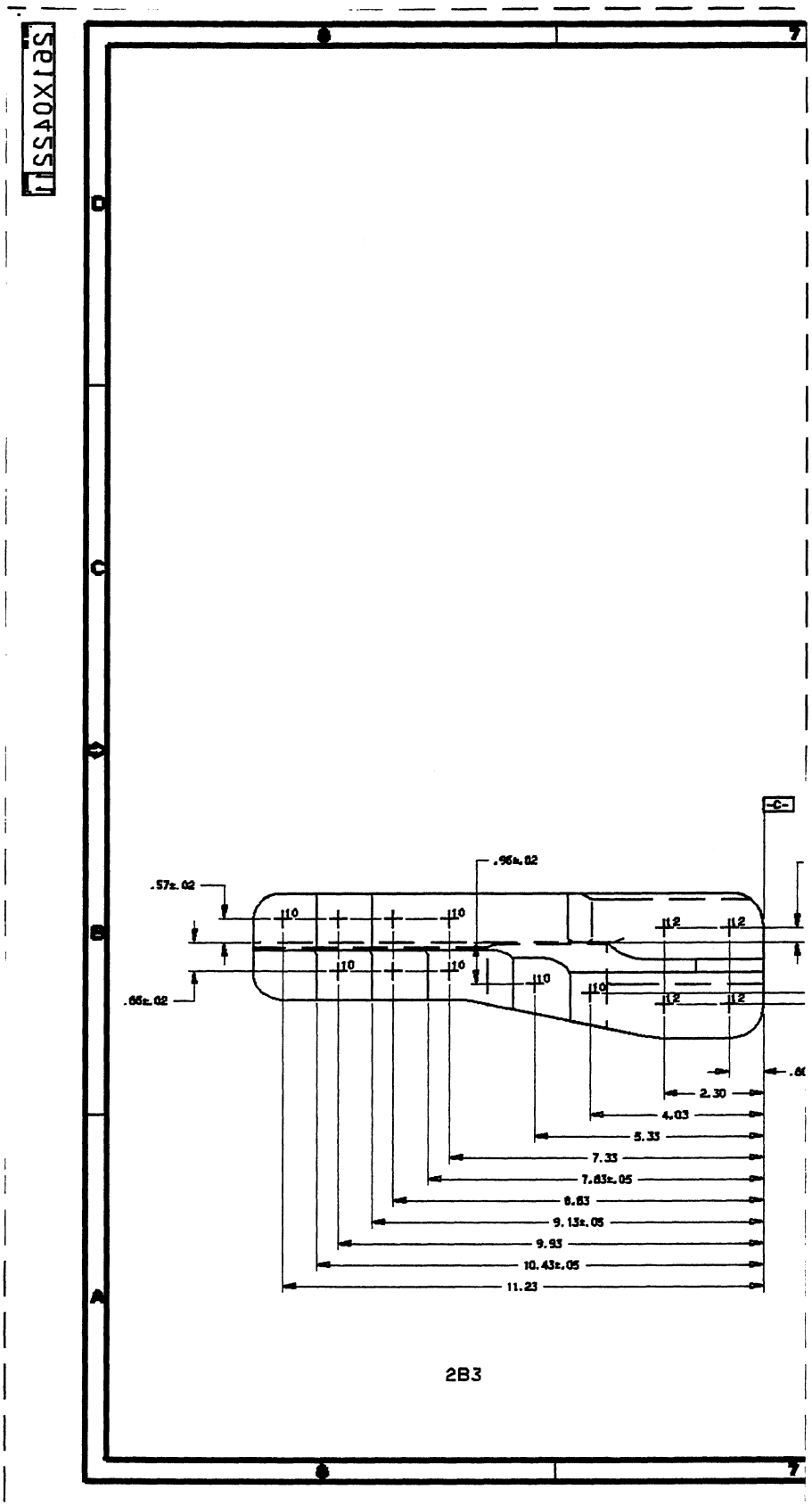
.96±.02
.57±.02
.66±.02
10
12
2.30
4.03
5.33
7.33
7.63±.05
8.63
9.13±.05
9.93
10.43±.05
11.23
2B3

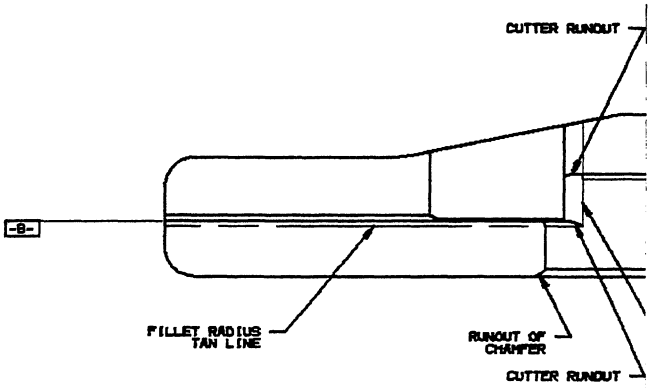

1A3
HIDDEN LINES
OMITTED FOR CLARITY

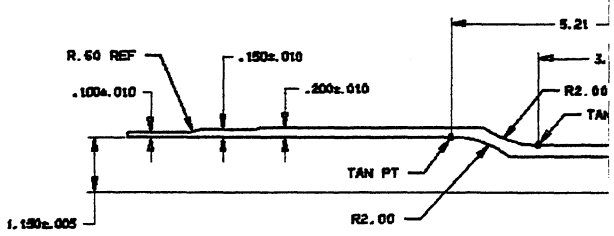

1D5

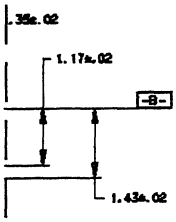

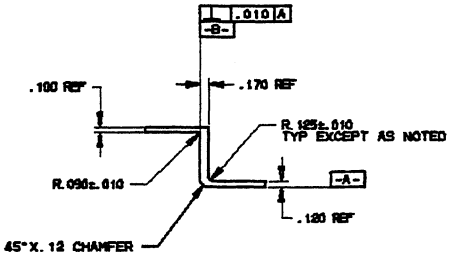

1B4

BOEING PROPRIETARY
THE INFORMATION CONTAINED HEREIN IS PROPRIETARY TO THE
AND SHALL NOT BE REPRODUCED OR DISCLOSED IN WHOLE OR
USED FOR ANY PURPOSE EXCEPT WHEN SUCH USES POSSESSED
AUTHORIZATION FROM THE BOEING COMPANY.

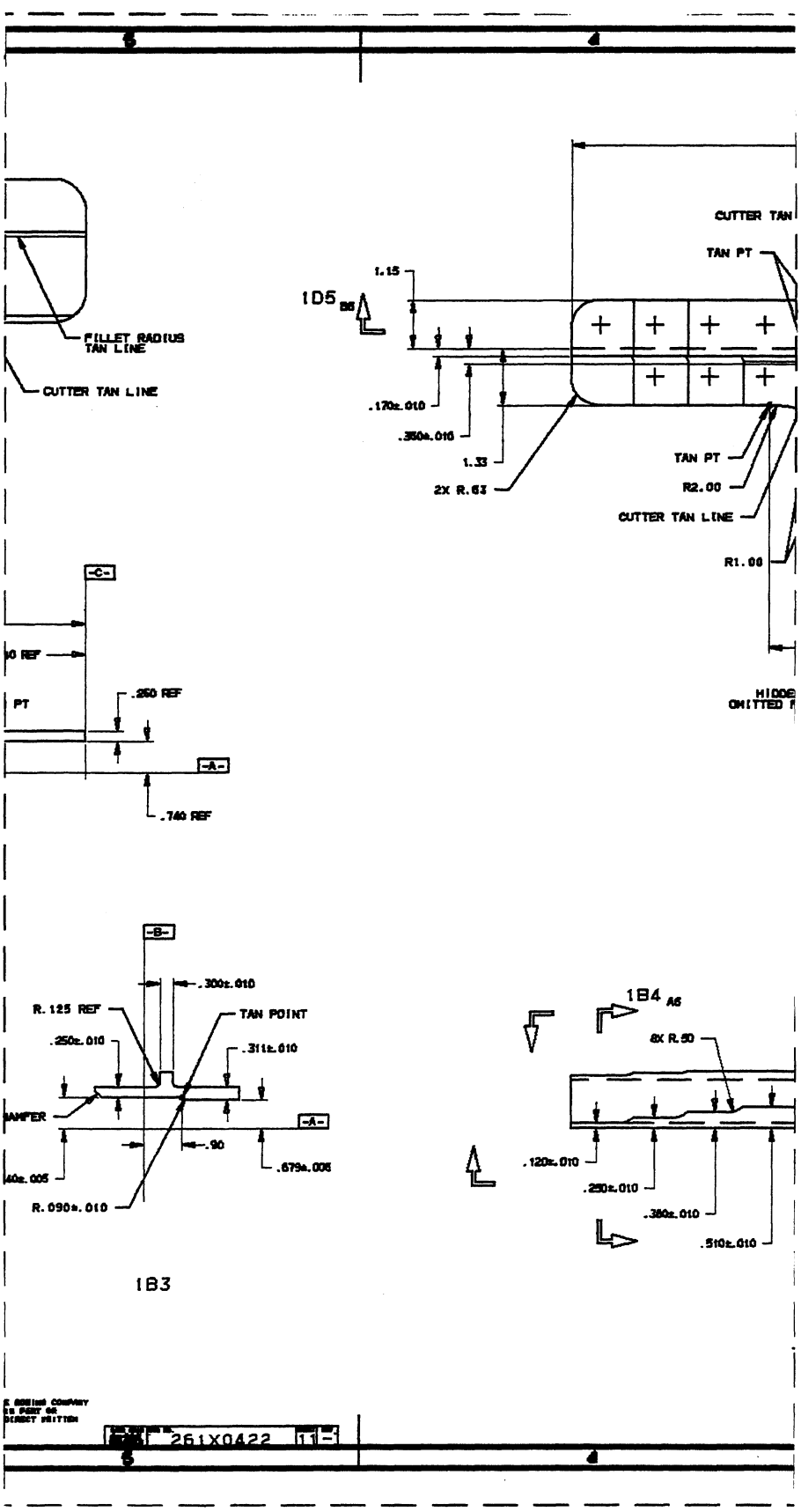
FILLET RADIUS TAN LINE
CUTTER TAN LINE
1D5
1.15
.170±.010
.350±.010
1.33
2X R.63
CUTTER TAN
TAN PT
TAN PT
R2.00
CUTTER TAN LINE
R1.00
-C-
.250 REF
-A-
.740 REF
-B-
.300±.010
R.125 REF
TAN POINT
.250±.010
.311±.010
-A-
.90
.679±.005
R.090±.010
1B3
1B4
8X R.50
.120±.010
.250±.010
.380±.010
.510±.010
261X0422

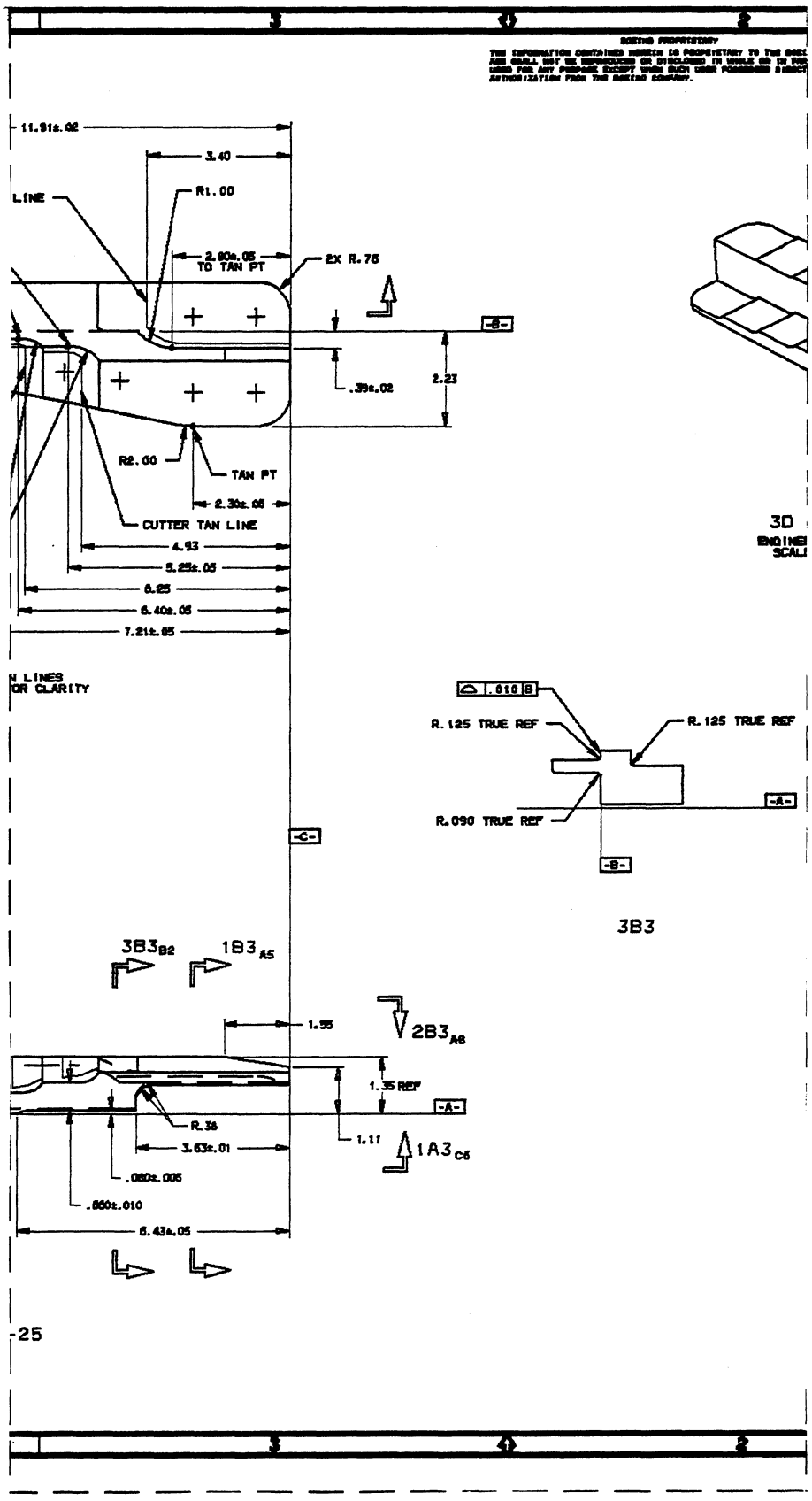
11.91±.02
3.40
R1.00
LINE
2.60±.05
TO TAN PT
2X R.75
-B-
.39±.02
2.23
R2.00
TAN PT
2.30±.05
CUTTER TAN LINE
4.93
5.25±.05
6.25
6.40±.05
7.21±.05
.010 B
R.125 TRUE REF
R.125 TRUE REF
R.090 TRUE REF
-A-
-B-
-C-
3B3
3B3B2
1B3A5
1.95
2B3A6
1.35 REF
-A-
R.38
3.63±.01
1.11
1A3C5
.080±.005
.850±.010
6.43±.05

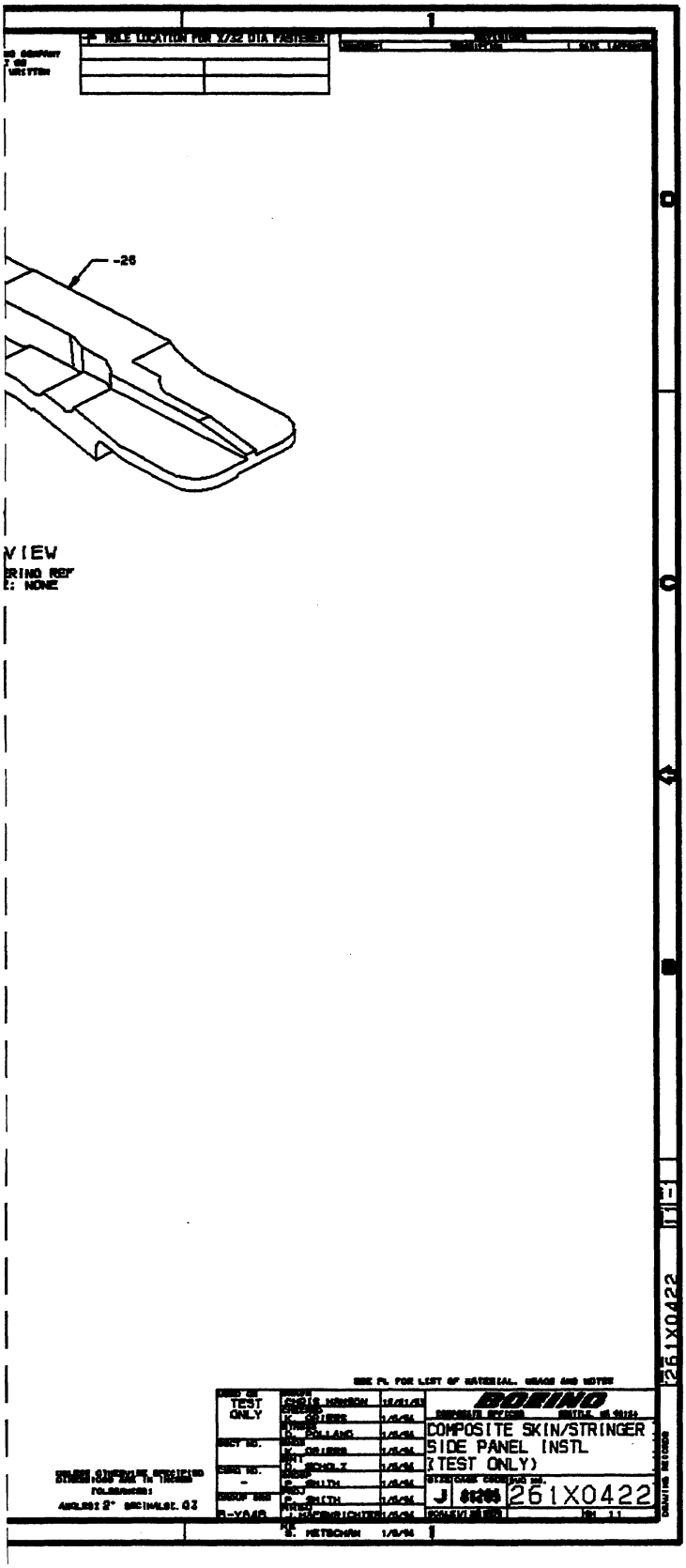
HOLE LOCATION FOR X/32 DIA FASTENER
-25
VIEW
RING REF
: NONE
TEST ONLY
BOEING
COMPOSITE SKIN/STRINGER
SIDE PANEL INSTL
(TEST ONLY)
261X0422
261X0422

B-113

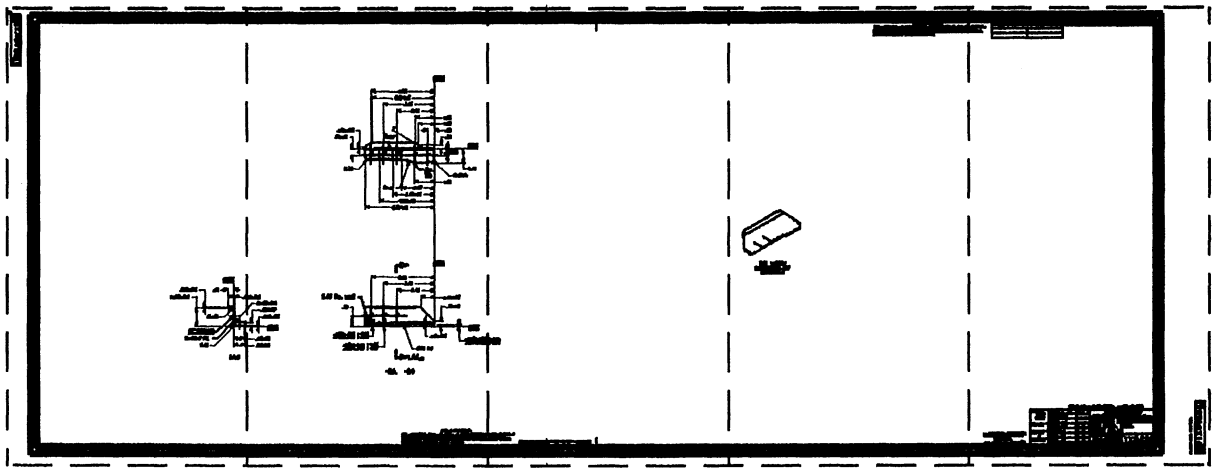

B-114 B-115 B-116 B-117 B-118

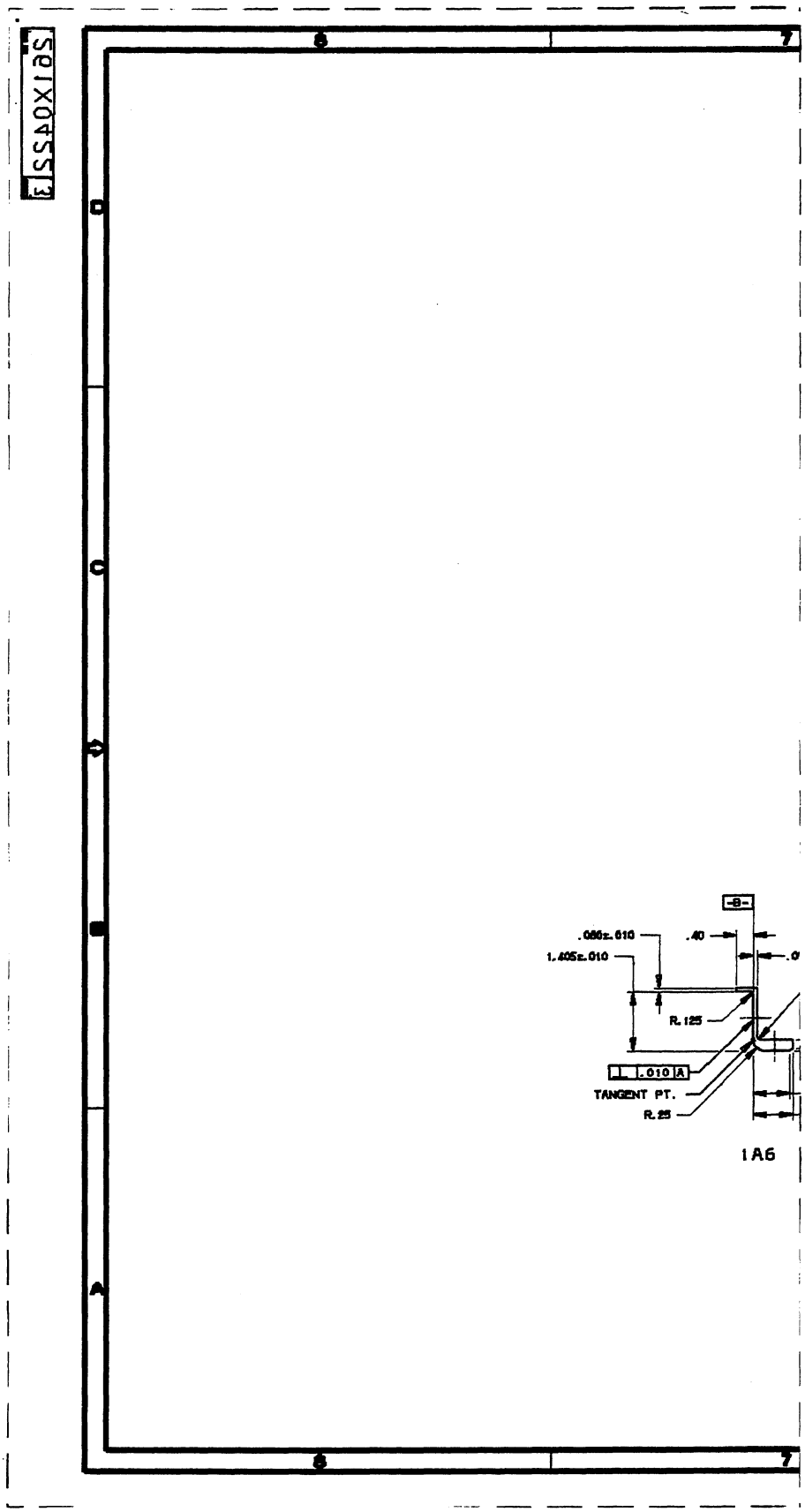

1A6

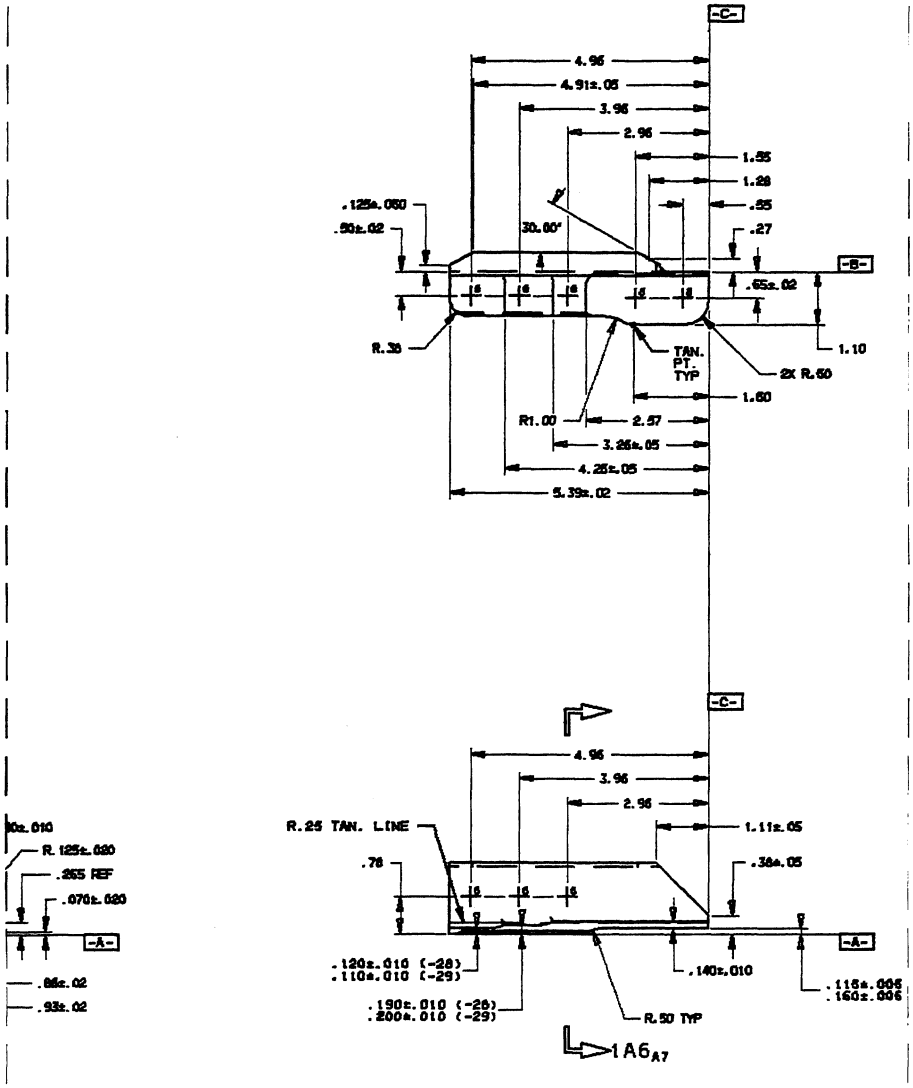

-28, -29

BOEING PROPRIETARY
THE INFORMATION CONTAINED HEREIN IS PROPRIETARY TO TH
AND SHALL NOT BE REPRODUCED OR DISCLOSED IN WHOLE OR
USED FOR ANY PURPOSE EXCEPT WHEN SUCH USES PERMITTED
AUTHORIZATION FROM THE BOEING COMPANY.

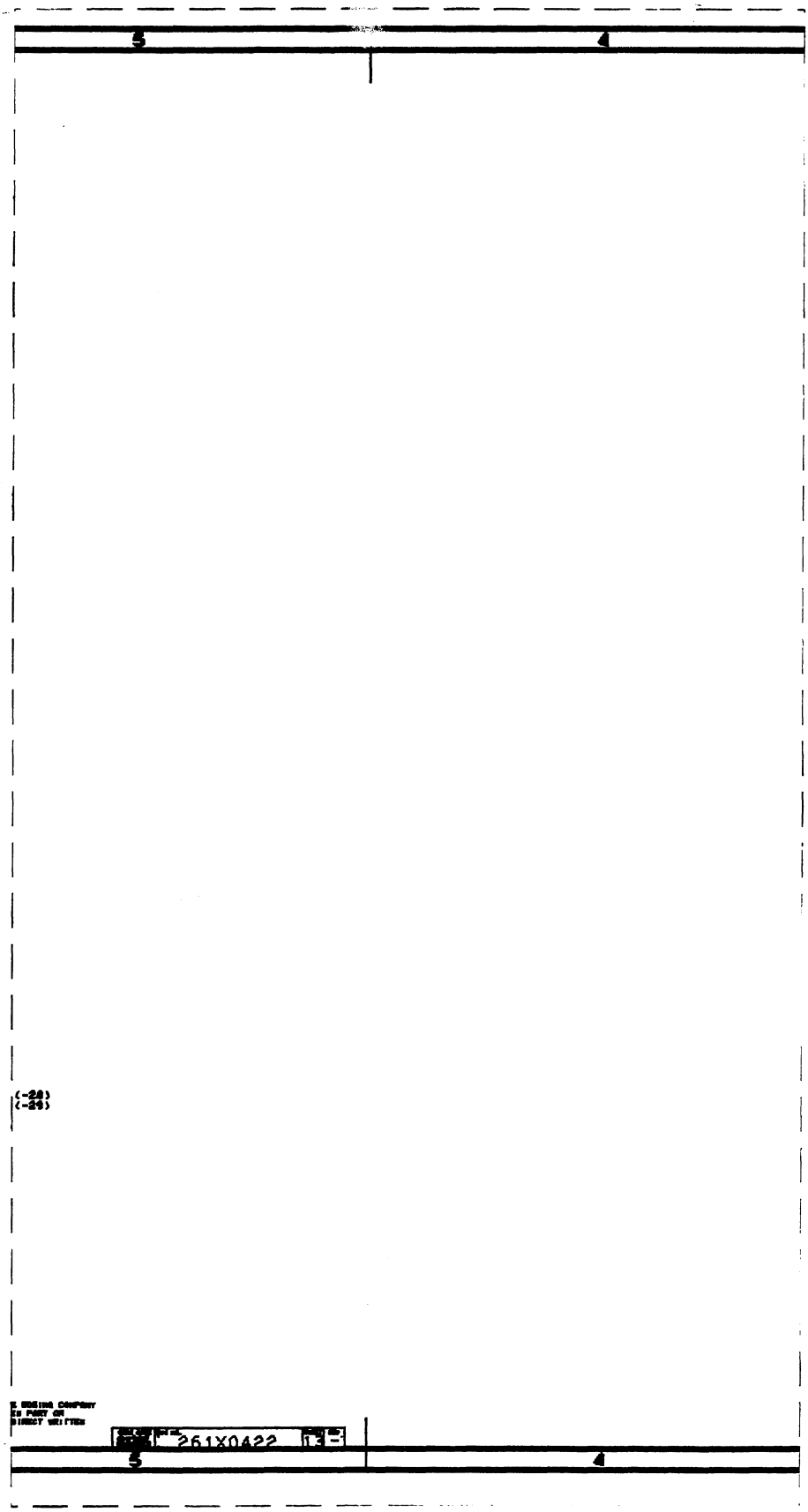
5
4
(-24)
(-24)
261X0422
5
4

BOEING PROPRIETARY
THE INFORMATION CONTAINED HEREIN IS PROPRIETARY TO THE BOEI
AND SHALL NOT BE REPRODUCED OR DISCLOSED IN WHOLE OR IN PA
USED FOR ANY PURPOSE EXCEPT WHEN SUCH USES PERMISSION IS REC
AUTHORIZATION FROM THE BOEING COMPANY.

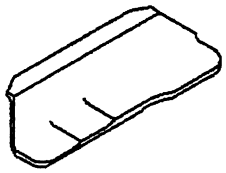

3D VIEW
ENGINEERING REF
SCALE:NONE

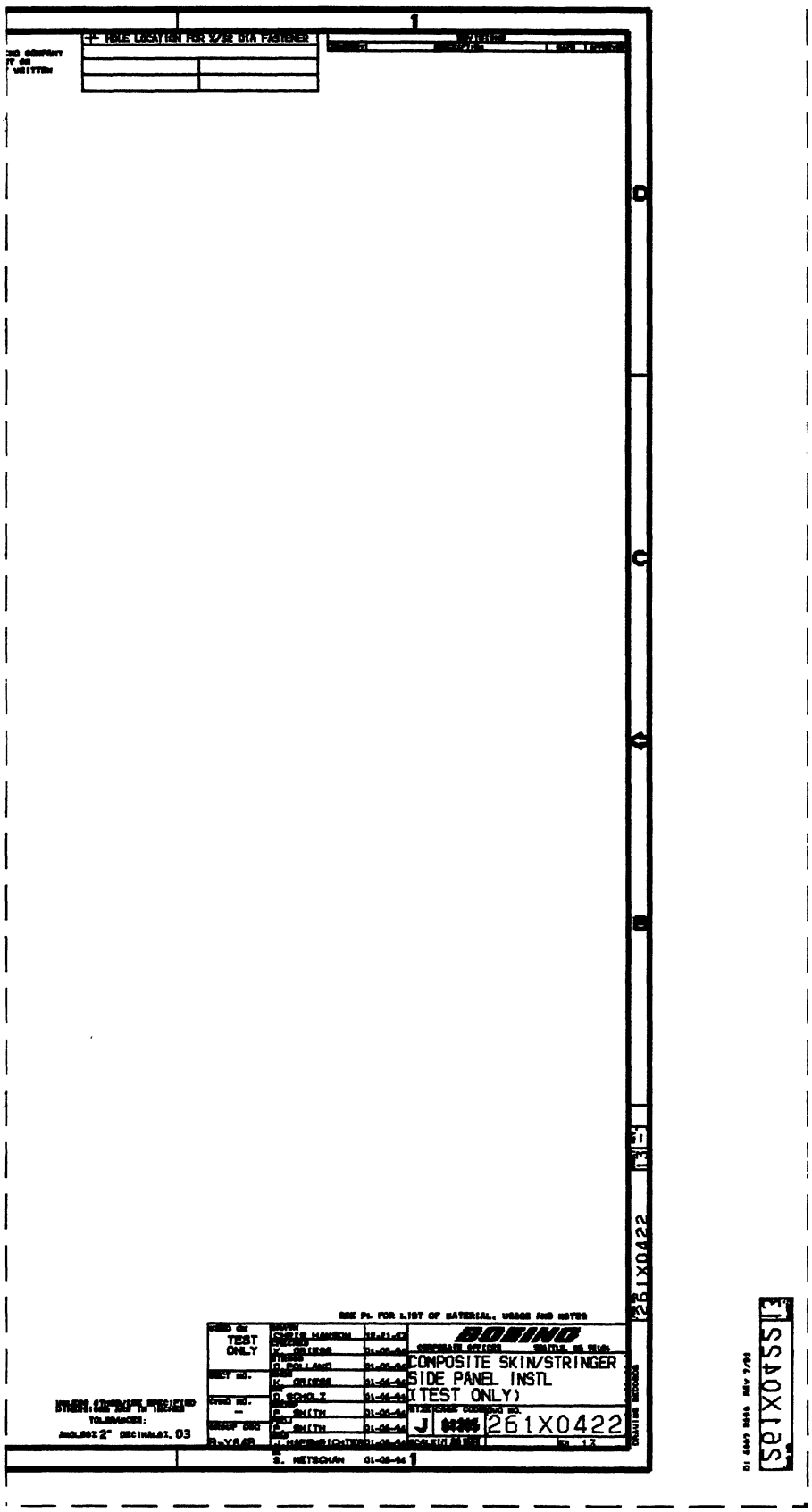
TEST ONLY
BOEING
COMPOSITE SKIN/STRINGER
SIDE PANEL INSTL
(TEST ONLY)
J 61265
261X0422
261X0422

APPENDIX C

COST AND WEIGHT DATA

SIDE PANEL COST & WEIGHT BREAKDOWN

FAMILY B (SKIN-STRINGER) - GLOBAL EVALUATION BASELINE

(Weight in lbs per shipset, Cost in $ per 300 shipsets)

C	PART #	DESCRIPTION	QTY	WEIGHT	RECURRING LABOR	RECURRING MATERIAL	NON RECURRING	TOTAL
1	261X0421-2	SKIN	1	780.7	$1,983,000	$8,263,100	$294,113	$10,540,213
2	261X0421-11	"J" STRINGER	2	12.9	$468,000	$261,922	$249,016	$978,938
2	261X0421-12	"J" STRINGER	1	4.2	$165,000	$85,882	$135,772	$386,654
2	261X0421-13	"J" STRINGER	7	3.5	$167,000	$70,560	$135,772	$373,332
2	261X0421-14	"J" STRINGER	4	16.7	$619,000	$341,482	$475,506	$1,435,988
2	261X0421-15	"J" STRINGER	2	7.8	$319,000	$158,371	$249,016	$726,387
2	261X0421-16	"J" STRINGER	2	19.8	$468,000	$407,722	$249,016	$1,124,738
2	261X0421-17	"J" STRINGER	2	12.2	$468,000	$251,222	$249,016	$968,238
2	261X0421-18	"J" STRINGER	7	56.4	$1,591,800	$1,015,200	$815,239	$3,422,239
2	261X0421-19	"J" STRINGER	4	57.8	$896,000	$1,331,712	$475,506	$2,703,218
2	261X0421-20	"J" STRINGER	1	6.1	$162,000	$145,814	$135,772	$443,586
2	261X0421-21	"J" STRINGER	1	1.0	$22,000	$25,776	$135,772	$183,548
5	AS92CC141-1,2	WINDOW BELT	2	88.0	$2,428,000	$1,881,000	$875,292	$5,184,292
3	261X0420-1	"F" FRAME	9	119.2	$4,372,200	$1,191,523	$1,045,255	$6,608,978
3	261X0420-2	"F" FRAME	1	13.2	$485,700	$131,947	$142,145	$759,792
3	261X0420-3	"F" FRAME	1	13.2	$485,700	$131,947	$142,145	$759,792
3	261X0420-4	"F" FRAME	1	13.2	$485,700	$131,947	$142,145	$759,792
3	261X0420-5	"F" FRAME	2	11.7	$531,600	$120,393	$96,300	$748,293
3	261X0420-6,13	"F" FRAME	4	3.1	$142,500	$32,355	$313,107	$487,962
3	261X0420-7	"F" FRAME	1	7.2	$309,900	$74,088	$169,755	$553,743
3	261X0420-8	"F" FRAME	2	2.3	$93,900	$24,512	$434,132	$552,544
3	261X0420-9	"F" FRAME	1	7.2	$309,900	$74,088	$169,755	$553,743
3	261X0420-10,12	"F" FRAME	2	11.7	$531,600	$120,393	$189,494	$841,487
3	261X0420-11	"F" FRAME	1	13.2	$485,700	$131,947	$142,145	$759,792
4	261X0421-1	PANEL BOND ASSY.	1	12.0	$4,268,400	$238,500	$10,589,192	$15,096,092
6	261X0419-1,3	LWR SILL OUT CHRD	2	5.2	$138,000	$97,344	$113,732	$349,076
6	261X0419-2	LWR SILL OUT CHRD	1	8.0	$165,000	$155,520	$48,244	$368,764
6	261X0419-4,6	UPP SILL OUT CHRD	2	5.1	$136,000	$103,219	$113,732	$352,951
6	261X0419-5	UPP SILL OUT CHRD	1	8.1	$167,000	$157,464	$48,244	$372,708
6	261X0419-7,8	LWR SILL INR CHRD	2	3.1	$92,000	$84,226	$57,885	$234,111
6	261X0419-9,10	EDGE FRAME	2	73.5	$1,290,900	$515,970	$401,774	$2,208,644
6	261X0419-11 TO 26	INTERCOSTALS	16	12.0	$123,000	$266,112	$117,897	$507,009
6	261X0419-27,28	SHEAR TIES	2	0.4	$9,000	$5,654	$17,119	$31,773
6	261X0419-29 TO 36	BACKUP FITTING	16	5.7	$12,226	$82,696	$39,271	$134,193
6	261X0419-37,38	AUX FRAME	2	31.4	$756,000	$307,989	$401,774	$1,465,763
6	261X0418-3	FRAME SPLICE	8	1.2	$22,000	$16,182	$25,934	$64,116
6	261X0418-6	SILL BRACKET	1	0.1	$3,000	$1,163	$15,989	$20,152
6	261X0418-7	SILL BRACKET	1	0.2	$5,000	$2,697	$19,379	$27,076
6	261X0418-8	SILL BRACKET	1	0.1	$3,000	$1,488	$12,372	$16,860
6	261X0418-9	SILL BRACKET	1	0.1	$3,000	$1,748	$13,503	$18,251
6	261X0418-10,11	AL FITTING	2	1.1	$210,000	$86,652	$36,225	$332,877
6	261X0418-12,13	AL FITTING	2	1.3	$195,000	$28,188	$30,705	$253,893
6	261X0418-14,15	AL FITTING	2	1.1	$570,000	$85,180	$78,919	$734,099
6	261X0418-16,17	AL FITTING	2	1.0	$495,000	$52,992	$76,504	$624,496
6	261X0418-18,19	AL HINGE FITTING	2	4.6	$1,260,000	$263,736	$197,168	$1,720,904
6	261X0418-4,5,21,22	FAIL-SAFE CHORDS	8	1.5	$117,000	$20,817	$169,432	$307,249
2	261X0418-23	STRINGER CLIPS	453	25.1	$178,551	$452,854	$19,153	$650,558
6	261X0418-20,24,25	STRG TERM. CLIPS	42	1.4	$31,000	$23,539	$21,640	$76,179
4	261X0418-905	FRAME INSTL.	1	12.7	$5,238,000	$949,517	$1,962,571	$8,150,088
4	261X0418-904	STRG CLIP INSTL.	1	8.0	$2,419,500	$642,927	$0	$3,062,427
10	261X0418-903	LWR SILL ASSY.	1	0.5	$218,967	$24,395	$36,686	$280,048
10	261X0418-902	UPR SILL ASSY.	1	0.5	$219,452	$26,612	$36,686	$282,750
10	261X0418-901	DOOR STRCT ASSY.	1	1.2	$675,838	$64,094	$486,753	$1,226,685

SIDE PANEL COST & WEIGHT BREAKDOWN

FAMILY B (SKIN-STRINGER) - GLOBAL EVALUATION BASELINE

(Weight in lbs per shipset, Cost in $ per 300 shipsets)

C	PART #	DESCRIPTION	QTY	WEIGHT	RECURRING LABOR	RECURRING MATERIAL	NON RECURRING	TOTAL
10	261X0418-1	DOOR INSTL.	1	16.8	$4,606,581	$1,022,579	$2,809,777	$8,438,937
7	261X0422-9,10	PASS. FLOOR BEAM	20	273.1	$416,703	$2,920,805	$26,387	$3,363,895
7	261X0422-11,12,13	STANCHION	20	66.5	$329,000	$1,288,075	$135,938	$1,753,013
8	261X0422-14,15	AL CARGO FB SPLIC	20	13.7	$2,625,000	$1,320,739	$73,830	$4,019,569
8	261X0422-4,5	SPLICE PLATE	1	8.9	$113,000	$149,253	$965,287	$1,227,540
8	261X0422-7	FRAME SPLICE	20	11.2	$333,000	$94,349	$415,365	$842,714
8	261X0422-8	FRAME SPL. FILLER	20	1.6	$39,000	$27,108	$4,830	$70,938
8	261X0422-2,16	END FRAME	1	11.1	$348,900	$71,928	$610,168	$1,030,996
8	261X0422-3	FRAME SPLICE CHRD	20	3.9	$263,000	$27,378	$112,479	$402,857
8	261X0422-17 TO 31	AL STRG SPLICE FTG	23	11.1	$3,046,500	$274,349	$706,301	$4,027,150
8	261X0422-6,32:41	STRG SPLICE	17	3.2	$49,000	$37,665	$116,669	$203,334
8	261X0422-42	FRM SPLICE FILLER	20	0.7	$24,000	$10,512	$0	$34,512
8	261X0422-43:56	STRG SPLICE FILLER	57	2.4	$46,000	$34,992	$0	$80,992
2	261X0421-11,19	LONG. SPLICE STRG.	1	10.4	$242,000	$231,945	$0	$473,945
10	261X0422-908	LOWER LOBE ASSY.	1	0.0	$470,100	$0	$0	$470,100
10	261X0422-907	PASS. FB INSTL.	1	2.8	$973,590	$150,903	$6,767	$1,131,260
10	261X0422-906	PASS. STAN. INSTL.	1	3.1	$1,264,537	$179,288	$13,533	$1,457,358
10	261X0422-905	LONG. LAP SPLICE	1	5.4	$1,109,000	$306,295	$5,085	$1,420,380
10	261X0422-904	FRAME SPLICE INSTL	1	4.8	$1,776,551	$285,507	$11,278	$2,073,335
10	261X0422-903	CARGO FB INSTL.	1	9.6	$2,356,485	$524,627	$0	$2,881,112
10	261X0422-902	OVRWNG LNG INSTL	1	1.5	$324,000	$116,785	$0	$440,785
10	261X0422-901	46/47 SEC. JOIN	1	6.9	$2,634,886	$392,582	$2,260,627	$5,288,095
10	261X0422-1	46/45 SEC. JOIN	1	7.1	$2,564,716	$438,065	$486,070	$3,488,852
TOTAL				1984.4	$62,968,583	$31,070,107	$31,410,059	$125,448,749

SUMMARY

C	DESCRIPTION	WEIGHT	RECURRING LABOR	RECURRING MATERIAL	NON RECURRING	TOTAL
1	Skin	780.7	$1,983,000	$8,263,100	$294,113	$10,540,213
2	Stringers/Core	233.9	$5,766,351	$4,780,462	$3,324,557	$13,871,370
3	Frames	215.2	$8,234,400	$2,165,140	$2,986,378	$13,385,918
5	Window Belt	88.0	$2,428,000	$1,881,000	$875,292	$5,184,292
4	Skin Panel Ass'y	32.7	$11,925,900	$1,830,944	$12,551,763	$26,308,607
6	Door Reinforce. Fab	166.2	$5,803,126	$2,360,576	$2,057,440	$10,221,142
7	Pass. Floor Details	339.6	$745,703	$4,208,880	$162,325	$5,116,908
8	Splice Details Fab	67.9	$6,887,400	$2,048,273	$3,004,929	$11,940,602
10	Assembly	60.2	$19,194,703	$3,531,732	$6,153,262	$28,879,698
	TOTAL	1984.4	$62,968,583	$31,070,107	$31,410,059	$125,448,749

SIDE PANEL COST & WEIGHT BREAKDOWN

FAMILY D (SANDWICH) - GLOBAL EVALUATION BASELINE

(Weight in lbs per shipset, Cost in $ per 300 shipsets)

C	PART #	DESCRIPTION	QTY	WEIGHT	RECURRING LABOR	RECURRING MATERIAL	NON RECURRING	TOTAL
1	261X0415-3	OUTER SKIN	1	472.7	$1,133,000	$5,672,444	$36,855	$6,842,299
2	261X0415-8	CORE FAB	1	148.7	$1,183,800	$1,459,568	$2,588	$2,645,956
2	261X0415-5	CORE FAB	1	38.4	$500,100	$376,916	$0	$877,016
2	261X0415-6A	CORE FAB	1	15.6	$352,500	$300,004	$2,588	$655,092
2	261X0415-7A	CORE FAB	1	1.7	$61,500	$32,693	$0	$94,193
2	261X0415-20,21	LONG. EDGE BAND	2	24.7	$1,315,000	$173,394	$752,979	$2,241,373
2	261X0415-22 TO 26	CIRC. EDGE BAND	5	36.7	$499,900	$217,998	$234,930	$952,828
2	261X0415-16 TO 19	WINDOW CLOSEOUT	14	31.9	$1,000,400	$189,486	$32,360	$1,222,246
2	261X0415-10,11	PASS. CLOSEOUT	2	25.0	$244,200	$516,000	$140,682	$900,882
2	261X0415-9,12	PASS. CLOSEOUT	2	2.9	$57,100	$59,856	$9,660	$126,616
2	261X0415-13 TO 15	OVRWNG CLOSEOUT	3	2.9	$64,900	$59,856	$75,171	$199,927
2	261X0415-4	CORE PANEL ASSY.	1	9.0	$3,746,800	$47,250	$1,959,174	$5,753,224
2	261X0415-27,28	FLOOR TRUSS TIE	15	6.6	$255,000	$121,750	$313,711	$690,461
1	261X0415-3	INNER SKIN	1	443.7	$949,200	$5,353,763	$36,855	$6,339,818
3	261X0416-1 TO 5	FUSELAGE FRAMES	25	188.1	$6,066,300	$1,181,617	$1,471,513	$8,719,430
6	261X0416-6	AUX PASS FRAMES	2	26.7	$527,700	$178,783	$252,920	$959,403
4	261X0415-901,1	PANEL BOND ASSY.	1	97.9	$5,000,400	$1,945,763	$11,031,137	$17,977,300
6	261X0414-1,3	LWR SILL OUT CHRD	2	5.3	$140,000	$99,216	$113,732	$352,948
6	261X0414-2	LWR SILL OUT CHRD	1	8.3	$170,000	$161,352	$48,244	$379,596
6	261X0414-4,6	UPP SILL OUT CHRD	2	5.3	$140,000	$107,265	$113,732	$360,997
6	261X0414-5	UPP SILL OUT CHRD	1	8.4	$172,000	$163,296	$48,244	$383,540
6	261X0414-7,8	LWR SILL INR CHRD	2	3.1	$92,000	$84,226	$57,885	$234,111
6	261X0414-9,10	EDGE FRAME	1	76.4	$1,194,000	$536,328	$401,774	$2,132,102
6	261X0419-11 TO 26	INTERCOSTALS	16	12.0	$123,000	$266,112	$117,897	$507,009
6	261X0419-27, 28	SHEAR TIES	2	0.4	$9,000	$5,654	$17,119	$31,773
6	261X0414-35 TO 42	BACKUP FITTING	16	5.7	$72,000	$82,696	$39,271	$193,967
6	261X0414-47	ANGLE	2	0.1	$1,875	$1,200	$16,667	$19,742
6	261X0413-3,4,5,21	FRAME SPLICE	8	1.7	$130,000	$16,708	$201,791	$348,499
6	261X0413-6	SILL BRACKET	1	0.1	$3,000	$1,163	$15,989	$20,152
6	261X0413-7	SILL BRACKET	1	0.2	$5,000	$2,697	$19,379	$27,076
6	261X0413-8	SILL BRACKET	1	0.1	$3,000	$1,488	$12,372	$16,860
6	261X0413-9	SILL BRACKET	1	0.1	$3,000	$1,748	$13,503	$18,251
6	261X0413-20	BRACKET	2	0.0	$2,000	$949	$14,407	$17,356
6	261X0413-10,11	AL FITTING	2	1.1	$210,000	$86,652	$36,225	$332,877
6	261X0413-12,13	AL FITTING	2	1.3	$195,000	$28,188	$30,705	$253,893
6	261X0413-14,15	AL FITTING	2	1.1	$570,000	$85,180	$78,919	$734,099
6	261X0413-16,17	AL FITTING	2	1.0	$495,000	$52,992	$76,504	$624,496
6	261X0413-18,19	AL HINGE FITTING	2	4.6	$1,260,000	$263,736	$197,168	$1,720,904
5	216X0417-1,2,3	WINDOW FRAME	14	47.7	$0	$1,678,000	$0	$1,678,000
5	261X0413-9061	F/G ISOLATION FAB	1	6.1	$73,000	$159,283	$6,210	$238,493
5	261X0413-906	F/G ISOLATION BOND	1	0.0	$1,486,921	$0	$14,279	$1,501,200
4	261X0413-905	WINDOW FRM INSTL.	1	6.7	$3,023,112	$329,978	$30,307	$3,383,397
10	261X0413-904	INTERCOSTAL ASSY.	0	0.0	$0	$0	$0	$0
10	261X0413-903	LWR SILL ASSY.	1	0.4	$218,967	$24,123	$36,686	$279,776
10	261X0413-902	UPR SILL ASSY.	1	0.4	$219,452	$25,768	$36,686	$281,906
10	261X0413-901	DOOR STRCT ASSY.	1	1.0	$675,838	$61,760	$486,753	$1,224,351
10	261X0413-1	DOOR INSTL.	1	14.9	$4,320,971	$987,843	$2,809,777	$8,118,591
7	261X0422-9,10	PASS. FLOOR BEAM	20	273.1	$416,703	$2,920,805	$26,387	$3,363,895
7	261X0412-11,12	STANCHION	20	65.9	$351,000	$1,288,075	$135,938	$1,775,013
8	261X0412-14	AL CARGO FB SPLIC	20	13.7	$2,850,000	$1,319,838	$73,830	$4,243,668
8	261X0412-4,5,6	SPLICE PLATE	2	21.3	$210,000	$357,201	$888,492	$1,455,693
8	261X0412-7	FRAME SPLICE	20	11.2	$350,400	$94,349	$379,122	$823,871
8	261X0412-8	FRAME SPL. FILLER	20	1.0	$28,000	$17,157	$600,788	$645,945
8	261X0412-2,16	END FRAME	1	15.5	$313,800	$100,440	$752,551	$1,166,791
8	261X0412-3	SHEAR TIES	2	1.6	$118,000	$17,107	$323,463	$458,570
10	261X0412-908	LOWER LOBE ASSY.	1	0.0	$470,000	$0	$0	$470,000

SIDE PANEL COST & WEIGHT BREAKDOWN

FAMILY D (SANDWICH) - GLOBAL EVALUATION BASELINE

(Weight in lbs per shipset, Cost in $ per 300 shipsets)

C	PART #	DESCRIPTION	QTY	WEIGHT	RECURRING LABOR	RECURRING MATERIAL	NON RECURRING	TOTAL
10	261X0412-907	PASS. FB INSTL.	1	2.7	$632,562	$164,329	$6,767	$803,658
10	261X0412-906	PASS. STAN. INSTL.	1	3.2	$911,959	$187,441	$13,533	$1,112,933
10	261X0412-905	LONG. LAP SPLICE	1	22.1	$2,385,335	$1,213,670	$5,085	$3,604,089
10	261X0412-904	FRAME SPLICE	1	4.2	$1,118,194	$252,822	$9,022	$1,380,038
10	261X0412-903	CARGO FB INSTL.	1	9.8	$1,975,627	$552,151	$0	$2,527,778
10	261X0412-902	OVRWNG LNG INSTL	1	1.4	$173,296	$109,163	$0	$282,459
10	261X0412-901	46/47 SEC. JOIN	1	7.1	$1,684,457	$402,441	$2,260,135	$4,347,033
10	261X0412-1	46/45 SEC. JOIN	1	6.9	$1,684,457	$387,391	$485,578	$2,557,427
	TOTAL			2247.4	$53,639,727	$32,587,122	$27,406,036	$113,632,885

SUMMARY

C	DESCRIPTION	WEIGHT	RECURRING LABOR	RECURRING MATERIAL	NON RECURRING	TOTAL
1	Skin	916.4	$2,082,200	$11,026,207	$73,711	$13,182,118
2	Stringers/Core	344.1	$9,281,200	$3,554,771	$3,523,842	$16,359,813
3	Frames	188.1	$6,066,300	$1,181,617	$1,471,513	$8,719,430
5	Window Belt	53.8	$1,559,921	$1,837,283	$20,489	$3,417,693
4	Skin Panel Ass'y	104.6	$8,023,512	$2,275,741	$11,061,443	$21,360,696
6	Door Reinforce. Fab	163.0	$5,517,575	$2,227,629	$1,924,444	$9,669,648
7	Pass. Floor Details	339.0	$767,703	$4,208,880	$162,325	$5,138,908
8	Splice Details Fab	64.3	$3,870,200	$1,906,092	$3,018,246	$8,794,538
10	Assembly	74.1	$16,471,116	$4,368,902	$6,150,023	$26,990,040
	TOTAL	2247.4	$53,639,727	$32,587,122	$27,406,036	$113,632,885

SIDE PANEL COST & WEIGHT BREAKDOWN

FAMILY B (SKIN-STRINGER) - GLOBAL OPTIMIZATION

(Weight in lbs per shipset, Cost in $ per 300 shipsets)

C	PART #	DESCRIPTION	QTY	WEIGHT	RECURRING LABOR	RECURRING MATERIAL	NON RECURRING	TOTAL
1	261X0421-2	SKIN	1	797.4	$2,090,000	$8,589,298	$294,113	$10,973,411
2	261X0421-11	"J" STRINGER	2	12.9	$468,000	$261,922	$249,016	$978,938
2	261X0421-12	"J" STRINGER	1	4.2	$165,000	$85,882	$135,772	$386,654
2	261X0421-13	"J" STRINGER	7	4.0	$56,878	$69,682	$39,271	$165,831
2	261X0421-14	"J" STRINGER	4	19.1	$383,719	$332,731	$39,271	$755,721
2	261X0421-15	"J" STRINGER	2	7.8	$319,000	$158,371	$249,016	$726,387
2	261X0421-16	"J" STRINGER	2	19.8	$468,000	$407,722	$249,016	$1,124,738
2	261X0421-17	"J" STRINGER	2	12.2	$468,000	$251,222	$249,016	$968,238
2	261X0421-18	"J" STRINGER	7	64.6	$909,744	$1,125,364	$39,271	$2,074,379
2	261X0421-19	"J" STRINGER	3	43.4	$672,000	$998,784	$356,629	$2,027,413
2	261X0421-20	"J" STRINGER	1	6.1	$162,000	$145,814	$135,772	$443,586
2	261X0421-21	"J" STRINGER	1	1.2	$8,125	$20,905	$39,271	$68,301
5	417-1A	2D BRAID WIN. FRM.	14	28.0	$3,025,500	$598,500	$295,000	$3,919,000
3	261X0420-1	"F" FRAME	9	119.2	$4,372,200	$1,191,523	$1,045,255	$6,608,978
3	261X0420-2	"F" FRAME	1	13.2	$485,700	$131,947	$142,145	$759,792
3	261X0420-3	"F" FRAME	1	13.2	$485,700	$131,947	$142,145	$759,792
3	261X0420-4	"F" FRAME	1	13.2	$485,700	$131,947	$142,145	$759,792
3	261X0420-5	"F" FRAME	2	11.7	$531,600	$120,393	$96,300	$748,293
3	261X0420-6,13	"F" FRAME	4	3.1	$142,500	$32,355	$313,107	$487,962
3	261X0420-7	"F" FRAME	1	7.2	$309,900	$74,088	$169,755	$553,743
3	261X0420-8	"F" FRAME	2	2.3	$93,900	$24,512	$434,132	$552,544
3	261X0420-9	"F" FRAME	1	7.2	$309,900	$74,088	$169,755	$553,743
3	261X0420-10,12	"F" FRAME	2	11.7	$531,600	$120,393	$189,494	$841,487
3	261X0420-11	"F" FRAME	1	13.2	$485,700	$131,947	$142,145	$759,792
4	261X0421-1	PANEL BOND ASSY.	1	12.0	$4,226,400	$238,500	$10,589,192	$15,054,092
6	261X0419-1,3	LWR SILL OUT CHRD	2	5.2	$138,000	$97,344	$113,732	$349,076
6	261X0419-2	LWR SILL OUT CHRD	1	8.0	$165,000	$155,520	$48,244	$368,764
6	261X0419-4,6	UPP SILL OUT CHRD	2	5.1	$136,000	$103,219	$113,732	$352,951
6	261X0419-5	UPP SILL OUT CHRD	1	8.1	$167,000	$157,464	$48,244	$372,708
6	261X0419-7,8	LWR SILL INR CHRD	2	3.1	$92,000	$84,226	$57,885	$234,111
6	261X0419-9,10	EDGE FRAME	2	73.5	$1,290,900	$515,970	$401,774	$2,208,644
6	261X0419-11 TO 26	INTERCOSTALS	16	12.0	$123,000	$266,112	$117,897	$507,009
6	261X0419-27,28	SHEAR TIES	2	0.4	$9,000	$5,654	$17,119	$31,773
6	261X0419-29 TO 36	BACKUP FITTING	16	5.7	$12,226	$82,696	$39,271	$134,193
6	261X0419-37,38	AUX FRAME	2	31.4	$756,000	$307,989	$401,774	$1,465,763
6	261X0418-3	FRAME SPLICE	8	1.2	$22,000	$16,182	$25,934	$64,116
6	261X0418-6	SILL BRACKET	1	0.1	$3,000	$1,163	$15,989	$20,152
6	261X0418-7	SILL BRACKET	1	0.2	$5,000	$2,697	$19,379	$27,076
6	261X0418-8	SILL BRACKET	1	0.1	$3,000	$1,488	$12,372	$16,860
6	261X0418-9	SILL BRACKET	1	0.1	$3,000	$1,748	$13,503	$18,251
6	261X0418-10,11	AL FITTING	2	1.1	$210,000	$86,652	$36,225	$332,877
6	261X0418-12,13	AL FITTING	2	1.3	$195,000	$28,188	$30,705	$253,893
6	261X0418-14,15	AL FITTING	2	1.1	$570,000	$85,180	$78,919	$734,099
6	261X0418-16,17	AL FITTING	2	1.0	$495,000	$52,992	$76,504	$624,496
6	261X0418-18,19	AL HINGE FITTING	2	4.6	$1,260,000	$263,736	$197,168	$1,720,904
6	261X0418-4,5,21,22	FAIL-SAFE CHORDS	8	1.5	$117,000	$20,817	$169,432	$307,249
2	261X0418-23	STRINGER CLIPS	434	24.0	$171,062	$433,860	$19,153	$624,076
6	261X0418-20,24,25	STRG TERM. CLIPS	42	1.4	$31,000	$23,539	$21,640	$76,179
4	261X0418-905	FRAME INSTL.	1	12.7	$5,238,000	$949,517	$1,962,571	$8,150,088
4	261X0418-904	STRG CLIP INSTL.	1	7.7	$2,318,020	$615,961	$0	$2,933,981
10	261X0418-903	LWR SILL ASSY.	1	0.5	$218,967	$24,395	$36,686	$280,048
10	261X0418-902	UPR SILL ASSY.	1	0.5	$219,452	$26,612	$36,686	$282,750
10	261X0418-901	DOOR STRCT ASSY.	1	1.2	$675,838	$64,094	$486,753	$1,226,685

SIDE PANEL COST & WEIGHT BREAKDOWN

FAMILY B (SKIN-STRINGER) - GLOBAL OPTIMIZATION

(Weight in lbs per shipset, Cost in $ per 300 shipsets)

C	PART #	DESCRIPTION	QTY	WEIGHT	RECURRING LABOR	RECURRING MATERIAL	NON RECURRING	TOTAL
10	261X0418-1	DOOR INSTL.	1	16.8	$4,606,581	$1,022,579	$2,809,777	$8,438,937
7	261X0422-9,10	PASS. FLOOR BEAM	20	273.1	$416,703	$2,920,805	$26,387	$3,363,895
7	261X0422-11,12,13	STANCHION	20	66.5	$329,000	$1,288,075	$135,938	$1,753,013
8	261X0422-14,15	AL CARGO FB SPLIC	20	13.7	$2,625,000	$1,320,739	$73,830	$4,019,569
8	261X0422-4,5	SPLICE PLATE	1	8.9	$113,000	$149,253	$965,287	$1,227,540
8	261X0422-7	FRAME SPLICE	20	11.2	$333,000	$94,349	$415,365	$842,714
8	261X0422-8	FRAME SPL. FILLER	20	1.6	$39,000	$27,108	$4,830	$70,938
8	261X0422-2,16	END FRAME	1	11.1	$348,900	$71,928	$610,168	$1,030,996
8	261X0422-3	FRAME SPLICE CHRD	20	3.9	$263,000	$27,378	$112,479	$402,857
8	261X0422-17 TO 31	AL STRG SPLICE FTG	21	10.1	$2,781,587	$250,493	$644,884	$3,676,963
8	261X0422-6,32:41	STRG SPLICE	16	3.1	$46,118	$35,449	$116,669	$198,237
8	261X0422-42	FRM SPLICE FILLER	20	0.7	$24,000	$10,512	$0	$34,512
8	261X0422-43:56	STRG SPLICE FILLER	57	2.4	$46,000	$34,992	$0	$80,992
8	261X0421-11,19	LONG. SPLICE STRG.	1	10.4	$242,000	$231,945	$0	$473,945
10	261X0422-908	LOWER LOBE ASSY.	1	0.0	$470,100	$0	$0	$470,100
10	261X0422-907	PASS. FB INSTL.	1	2.8	$973,590	$150,903	$6,767	$1,131,260
10	261X0422-906	PASS. STAN. INSTL.	1	3.1	$1,264,537	$179,288	$13,533	$1,457,358
10	261X0422-905	LONG. LAP SPLICE	1	5.4	$1,109,000	$306,295	$5,085	$1,420,380
10	261X0422-904	FRAME SPLICE INSTL	1	4.8	$1,776,551	$285,507	$11,278	$2,073,335
10	261X0422-903	CARGO FB INSTL.	1	9.6	$2,356,485	$524,627	$0	$2,881,112
10	261X0422-902	OVRWNG LNG INSTL	1	1.5	$324,000	$116,785	$0	$440,785
10	261X0422-901	46/47 SEC. JOIN	1	6.8	$2,585,086	$378,042	$2,260,627	$5,223,755
10	261X0422-1	46/45 SEC. JOIN	1	7.0	$2,514,916	$421,840	$486,070	$3,422,827
	TOTAL			1935.2	$61,889,385	$29,773,744	$29,244,268	$120,907,398

SUMMARY

C	DESCRIPTION	WEIGHT	RECURRING LABOR	RECURRING MATERIAL	NON RECURRING	TOTAL
1	Skin	797.4	$2,090,000	$8,589,298	$294,113	$10,973,411
2	Stringers/Core	219.3	$4,251,528	$4,292,259	$1,800,476	$10,344,263
3	Frames	215.2	$8,234,400	$2,165,140	$2,986,378	$13,385,918
5	Window Belt	28.0	$3,025,500	$598,500	$295,000	$3,919,000
4	Skin Panel Ass'y	32.4	$11,782,420	$1,803,978	$12,551,763	$26,138,160
6	Door Reinforce. Fab	166.2	$5,803,126	$2,360,576	$2,057,440	$10,221,142
7	Pass. Floor Details	339.6	$745,703	$4,208,880	$162,325	$5,116,908
8	Splice Details Fab	77.1	$6,861,605	$2,254,146	$2,943,512	$12,059,262
10	Assembly	60.0	$19,095,103	$3,500,967	$6,153,262	$28,749,333
	TOTAL	1935.2	$61,889,385	$29,773,744	$29,244,268	$120,907,398

SIDE PANEL COST & WEIGHT BREAKDOWN

FAMILY D (SANDWICH) - GLOBAL OPTIMIZATION

(Weight in lbs per shipset, Cost in $ per 300 shipsets)

C	PART #	DESCRIPTION	QTY	WEIGHT	RECURRING LABOR	RECURRING MATERIAL	NON RECURRING	TOTAL
1	261X0415-3	OUTER SKIN	1	472.7	$1,133,000	$5,672,444	$36,855	$6,842,299
2	261X0415-8	CORE FAB	1	83.6	$1,183,800	$2,919,136	$2,588	$4,105,524
2	261X0415-5	CORE FAB	1	21.6	$500,100	$753,832	$0	$1,253,932
2	261X0415-6A	CORE FAB	1	0.0	$34,500	$104,500	$2,588	$141,588
2	261X0415-7A	CORE FAB	1	0.0	$34,500	$104,500	$0	$139,000
2	261X0415-20,21	LONG. EDGE BAND	2	24.7	$1,315,000	$173,394	$752,979	$2,241,373
2	261X0415-22 TO 26	CIRC. EDGE BAND	5	6.1	$38,000	$117,000	$234,930	$389,930
5	261X0415-K,L,M	FRM ATTACH "T"	45	20.5	$1,438,000	$207,000	$323,000	$1,968,000
2	261X0415-10,11	PASS. CLOSEOUT	2	12.9	$191,000	$243,000	$140,682	$574,682
2	261X0415-9,12	PASS. CLOSEOUT	2	2.9	$57,100	$59,856	$9,660	$126,616
2	261X0415-13 TO 15	OVRWNG CLOSEOUT	3	2.9	$64,900	$59,856	$75,171	$199,927
2	261X0415-4	CORE PANEL ASSY.	1	9.0	$4,060,800	$668,000	$214,531	$4,943,331
2	261X0415-27,28	FLOOR TRUSS TIE	15	6.6	$255,000	$121,750	$313,711	$690,461
1	261X0415-3	INNER SKIN	1	443.7	$949,200	$5,353,763	$36,855	$6,339,818
3	261X0416-1 TO 5	FUSELAGE FRAMES	25	188.1	$6,066,300	$1,181,617	$1,471,513	$8,719,430
6	261X0416-6	AUX PASS FRAMES	2	26.7	$527,700	$178,783	$252,920	$959,403
4	261X0415-901,1	PANEL BOND ASSY.	1	66.7	$5,100,000	$621,000	$11,031,137	$16,752,137
6	261X0414-1,3	LWR SILL OUT CHRD	2	5.3	$140,000	$99,216	$113,732	$352,948
6	261X0414-2	LWR SILL OUT CHRD	1	8.3	$170,000	$161,352	$48,244	$379,596
6	261X0414-4,6	UPP SILL OUT CHRD	2	5.3	$140,000	$107,265	$113,732	$360,997
6	261X0414-5	UPP SILL OUT CHRD	1	8.4	$172,000	$163,296	$48,244	$383,540
6	261X0414-7,8	LWR SILL INR CHRD	2	3.1	$92,000	$84,226	$57,885	$234,111
6	261X0414-9,10	EDGE FRAME	1	76.4	$1,194,000	$536,328	$401,774	$2,132,102
6	261X0419-11 TO 26	INTERCOSTALS	16	12.0	$123,000	$266,112	$117,897	$507,009
6	261X0419-27,28	SHEAR TIES	2	0.4	$9,000	$5,654	$17,119	$31,773
6	261X0414-35 TO 42	BACKUP FITTING	16	5.7	$72,000	$82,696	$39,271	$193,967
6	261X0414-47	ANGLE	2	0.1	$1,875	$1,200	$16,667	$19,742
6	261X0413-3,4,5,21	FRAME SPLICE	8	1.7	$130,000	$16,708	$201,791	$348,499
6	261X0413-6	SILL BRACKET	1	0.1	$3,000	$1,163	$15,989	$20,152
6	261X0413-7	SILL BRACKET	1	0.2	$5,000	$2,697	$19,379	$27,076
6	261X0413-8	SILL BRACKET	1	0.1	$3,000	$1,488	$12,372	$16,860
6	261X0413-9	SILL BRACKET	1	0.1	$3,000	$1,748	$13,503	$18,251
6	261X0413-20	BRACKET	2	0.0	$2,000	$949	$14,407	$17,356
6	261X0413-10,11	AL FITTING	2	1.1	$210,000	$86,652	$36,225	$332,877
6	261X0413-12,13	AL FITTING	2	1.3	$195,000	$28,188	$30,705	$253,893
6	261X0413-14,15	AL FITTING	2	1.1	$570,000	$85,180	$78,919	$734,099
6	261X0413-16,17	AL FITTING	2	1.0	$495,000	$52,992	$76,504	$624,496
6	261X0413-18,19	AL HINGE FITTING	2	4.6	$1,260,000	$263,736	$197,168	$1,720,904
5	417-1A	2D BRAID WIN. FRM.	14	28.0	$3,025,500	$598,500	$295,000	$3,919,000
5	261X0413-9061	F/G ISOLATION FAB	0	0.0	$0	$0	$0	$0
5	261X0413-906	F/G ISOLATION BOND	0	0.0	$0	$0	$0	$0
4	261X0413-905	WINDOW FRM INSTL.	0	0.0	$0	$0	$0	$0
10	261X0413-904	INTERCOSTAL ASSY.	0	0.0	$0	$0	$0	$0
10	261X0413-903	LWR SILL ASSY.	1	0.4	$218,967	$24,123	$36,686	$279,776
10	261X0413-902	UPR SILL ASSY.	1	0.4	$219,452	$25,768	$36,686	$281,906
10	261X0413-901	DOOR STRCT ASSY.	1	1.0	$675,838	$61,760	$486,753	$1,224,351
10	261X0413-1	DOOR INSTL.	1	14.9	$4,320,971	$987,843	$2,809,777	$8,118,591
7	261X0422-9,10	PASS. FLOOR BEAM	20	273.1	$416,703	$2,920,805	$26,387	$3,363,895
7	261X0412-11,12	STANCHION	20	65.9	$351,000	$1,288,075	$135,938	$1,775,013
8	261X0412-14	AL CARGO FB SPLIC	20	13.7	$2,850,000	$1,319,838	$73,830	$4,243,668
8	261X0412-4,5,6	SPLICE PLATE	2	10.7	$105,000	$177,000	$888,492	$1,170,492
8	261X0412-7	FRAME SPLICE	20	11.2	$350,400	$94,349	$379,122	$823,871
8	261X0412-8	FRAME SPL. FILLER	20	1.0	$28,000	$17,157	$600,788	$645,945
8	261X0412-2,16	END FRAME	1	15.5	$313,800	$100,440	$752,551	$1,166,791
8	261X0412-3	SHEAR TIES	2	1.6	$118,000	$17,107	$323,463	$458,570
10	261X0412-908	LOWER LOBE ASSY.	1	0.0	$470,000	$0	$0	$470,000

SIDE PANEL COST & WEIGHT BREAKDOWN

FAMILY D (SANDWICH) - GLOBAL OPTIMIZATION

(Weight in lbs per shipset, Cost in $ per 300 shipsets)

C	PART #	DESCRIPTION	QTY	WEIGHT	RECURRING LABOR	RECURRING MATERIAL	NON RECURRING	TOTAL
10	261X0412-907	PASS. FB INSTL.	1	2.7	$632,562	$164,329	$6,767	$803,658
10	261X0412-906	PASS. STAN. INSTL.	1	3.2	$911,959	$187,441	$13,533	$1,112,933
10	261X0412-905	LONG. LAP SPLICE	1	22.1	$2,385,335	$1,213,670	$5,085	$3,604,089
10	261X0412-904	FRAME SPLICE	1	4.2	$1,118,194	$252,822	$9,022	$1,380,038
10	261X0412-903	CARGO FB INSTL.	1	9.8	$1,975,627	$552,151	$0	$2,527,778
10	261X0412-902	OVRWNG LNG INSTL	1	1.4	$173,296	$109,163	$0	$282,459
10	261X0412-901	46/47 SEC. JOIN	1	7.1	$1,684,457	$402,441	$2,260,135	$4,347,033
10	261X0412-1	46/45 SEC. JOIN	1	6.9	$1,684,457	$387,391	$485,578	$2,557,427
TOTAL				2019.8	$51,968,294	$31,490,450	$26,196,238	$109,654,982

SUMMARY

C	DESCRIPTION	WEIGHT	RECURRING LABOR	RECURRING MATERIAL	NON RECURRING	TOTAL
1	Skin	916.4	$2,082,200	$11,026,207	$73,711	$13,182,118
2	Stringers/Core	170.3	$7,734,700	$5,324,824	$1,746,840	$14,525,776
3	Frames	188.1	$6,066,300	$1,181,617	$1,471,513	$8,719,430
5	Window Belt	48.5	$4,463,500	$805,500	$618,000	$16,752,137
4	Skin Panel Ass'y	66.7	$5,100,000	$621,000	$11,031,137	$6,167,588
6	Door Reinforce. Fab	163.0	$5,517,575	$2,227,629	$1,924,444	$9,669,648
7	Pass. Floor Details	339.0	$767,703	$4,208,880	$162,325	$5,138,908
8	Splice Details Fab	53.7	$3,765,200	$1,725,891	$3,018,246	$4,265,669
10	Assembly	74.1	$16,471,116	$4,368,902	$6,150,023	$17,085,415
	TOTAL	2019.8	$51,968,294	$31,490,450	$26,196,238	$109,654,982

SIDE PANEL COST & WEIGHT BREAKDOWN

FAMILY B (SKIN-STRINGER) - LOCAL OPTIMIZATION POTENTIAL

(Weight in lbs per shipset, Cost in $ per 300 shipsets)

C	PART #	DESCRIPTION	QTY	WEIGHT	RECURRING LABOR	RECURRING MATERIAL	NON RECURRING	TOTAL
1	261X0421-2	SKIN	2	897.4	$2,090,000	$9,666,461	$294,113	$12,050,574
2	261X0421-11	"HAT" STRINGER	1	12.9	$119,400	$261,922	$124,508	$505,830
2	261X0421-12	"HAT" STRINGER	1	4.2	$119,400	$85,882	$135,772	$341,054
2	261X0421-13	"HAT" STRINGER	7	4.0	$34,127	$69,682	$135,772	$239,581
2	261X0421-14	"HAT" STRINGER	2	19.1	$238,800	$332,731	$237,753	$809,284
2	261X0421-15	"HAT" STRINGER	1	7.8	$119,400	$158,371	$124,508	$402,279
2	261X0421-16	"HAT" STRINGER	2	19.8	$238,800	$407,722	$249,016	$895,538
2	261X0421-17	"HAT" STRINGER	1	12.2	$119,400	$251,222	$124,508	$495,130
2	261X0421-18	"HAT" STRINGER	5	64.6	$597,000	$1,125,364	$582,314	$2,304,678
2	261X0421-19	"HAT" STRINGER	2	43.4	$238,800	$998,784	$475,506	$1,713,090
2	261X0421-20	"HAT" STRINGER	1	6.1	$119,400	$145,814	$67,886	$333,100
2	261X0421-21	"HAT" STRINGER	1	1.2	$4,875	$20,905	$135,772	$161,552
5	417-1A	2D BRAID WIN. FRM.	14	28.0	$3,025,500	$598,500	$295,000	$3,919,000
3	261X0420-1	"F" FRAME	9	119.2	$4,372,200	$1,191,523	$1,045,255	$6,608,978
3	261X0420-2	"F" FRAME	1	13.2	$485,700	$131,947	$142,145	$759,792
3	261X0420-3	"F" FRAME	1	13.2	$485,700	$131,947	$142,145	$759,792
3	261X0420-4	"F" FRAME	1	13.2	$485,700	$131,947	$142,145	$759,792
3	261X0420-5	"F" FRAME	2	11.7	$531,600	$120,393	$96,300	$748,293
3	261X0420-6,13	"F" FRAME	4	3.1	$142,500	$32,355	$313,107	$487,962
3	261X0420-7	"F" FRAME	1	7.2	$309,900	$74,088	$169,755	$553,743
3	261X0420-8	"F" FRAME	2	2.3	$93,900	$24,512	$434,132	$552,544
3	261X0420-9	"F" FRAME	1	7.2	$309,900	$74,088	$169,755	$553,743
3	261X0420-10,12	"F" FRAME	2	11.7	$531,600	$120,393	$189,494	$841,487
3	261X0420-11	"F" FRAME	1	13.2	$485,700	$131,947	$142,145	$759,792
4	261X0421-1	PANEL BOND ASSY.	1	12.0	$3,920,400	$238,500	$10,589,192	$14,748,092
6	261X0419-1,3	LWR SILL OUT CHRD	2	5.2	$138,000	$97,344	$113,732	$349,076
6	261X0419-2	LWR SILL OUT CHRD	1	8.0	$165,000	$155,520	$48,244	$368,764
6	261X0419-4,6	UPP SILL OUT CHRD	2	5.1	$136,000	$103,219	$113,732	$352,951
6	261X0419-5	UPP SILL OUT CHRD	1	8.1	$167,000	$157,464	$48,244	$372,708
6	261X0419-7,8	LWR SILL INR CHRD	2	3.1	$92,000	$84,226	$57,885	$234,111
6	261X0419-9,10	EDGE FRAME	2	73.5	$1,290,900	$515,970	$401,774	$2,208,644
6	261X0419-11 TO 26	INTERCOSTALS	16	12.0	$123,000	$266,112	$117,897	$507,009
6	261X0419-27,28	SHEAR TIES	2	0.4	$9,000	$5,654	$17,119	$31,773
6	261X0419-29 TO 36	BACKUP FITTING	16	5.7	$12,226	$82,696	$39,271	$134,193
6	261X0419-37,38	AUX FRAME	2	31.4	$756,000	$307,989	$401,774	$1,465,763
6	261X0418-3	FRAME SPLICE	8	1.2	$22,000	$16,182	$25,934	$64,116
6	261X0418-6	SILL BRACKET	1	0.1	$3,000	$1,163	$15,989	$20,152
6	261X0418-7	SILL BRACKET	1	0.2	$5,000	$2,697	$19,379	$27,076
6	261X0418-8	SILL BRACKET	1	0.1	$3,000	$1,488	$12,372	$16,860
6	261X0418-9	SILL BRACKET	1	0.1	$3,000	$1,748	$13,503	$18,251
6	261X0418-10,11	AL FITTING	2	1.1	$210,000	$86,652	$36,225	$332,877
6	261X0418-12,13	AL FITTING	2	1.3	$195,000	$28,188	$30,705	$253,893
6	261X0418-14,15	AL FITTING	2	1.1	$570,000	$85,180	$78,919	$734,099
6	261X0418-16,17	AL FITTING	2	1.0	$495,000	$52,992	$76,504	$624,496
6	261X0418-18,19	AL HINGE FITTING	2	4.6	$1,260,000	$263,736	$197,168	$1,720,904
6	261X0418-4,5,21,22	FAIL-SAFE CHORDS	8	1.5	$117,000	$20,817	$169,432	$307,249
2	261X0418-23	STRINGER CLIPS	0	0.0	$0	$0	$0	$0
6	261X0418-20,24,25	STRG TERM. CLIPS	42	1.4	$31,000	$23,539	$21,640	$76,179
4	261X0418-905	FRAME INSTL.	1	18.8	$2,108,609	$1,357,325	$1,962,571	$5,428,505
4	261X0418-904	STRG CLIP INSTL.	0	0.0	$0	$0	$0	$0
10	261X0418-903	LWR SILL ASSY.	1	0.5	$67,442	$24,395	$36,686	$128,523
10	261X0418-902	UPR SILL ASSY.	1	0.5	$68,250	$26,612	$36,686	$131,548
10	261X0418-901	DOOR STRCT ASSY.	1	1.2	$275,742	$64,094	$486,753	$826,589

SIDE PANEL COST & WEIGHT BREAKDOWN

FAMILY B (SKIN-STRINGER) - LOCAL OPTIMIZATION POTENTIAL

(Weight in lbs per shipset, Cost in $ per 300 shipsets)

C	PART #	DESCRIPTION	QTY	WEIGHT	RECURRING LABOR	RECURRING MATERIAL	NON RECURRING	TOTAL
10	261X0418-1	DOOR INSTL.	1	16.8	$1,229,957	$1,022,579	$2,809,777	$5,062,313
7	261X0422-9,10	PASS. FLOOR BEAM	20	273.1	$416,703	$2,920,805	$26,387	$3,363,895
7	261X0422-11,12,13	STANCHION	20	66.5	$329,000	$1,288,075	$135,938	$1,753,013
8	261X0422-14,15	AL CARGO FB SPLIC	20	13.7	$2,625,000	$1,320,739	$73,830	$4,019,569
8	261X0422-4,5	SPLICE PLATE	1	8.9	$113,000	$149,253	$965,287	$1,227,540
8	261X0422-7	FRAME SPLICE	20	11.2	$333,000	$94,349	$415,365	$842,714
8	261X0422-8	FRAME SPL. FILLER	20	1.6	$39,000	$27,108	$4,830	$70,938
8	261X0422-2,16	END FRAME	1	11.1	$348,900	$71,928	$610,168	$1,030,996
8	261X0422-3	FRAME SPLICE CHRD	20	3.9	$263,000	$27,378	$112,479	$402,857
8	261X0422-17 TO 31	AL STRG SPLICE FTG	14	6.7	$2,028,969	$182,716	$470,397	$2,682,082
8	261X0422-6,32:41	STRG SPLICE	12	2.3	$36,750	$28,249	$87,502	$152,501
8	261X0422-42	FRM SPLICE FILLER	20	0.7	$24,000	$10,512	$0	$34,512
8	261X0422-43:56	STRG SPLICE FILLER	0	0.0	$0	$0	$0	$0
8	261X0421-11,19	LONG. SPLICE STRG.	1	10.4	$242,000	$231,945	$0	$473,945
10	261X0422-908	LOWER LOBE ASSY.	1	0.0	$470,100	$0	$0	$470,100
10	261X0422-907	PASS. FB INSTL.	1	2.8	$331,021	$150,903	$6,767	$488,690
10	261X0422-906	PASS. STAN. INSTL.	1	3.1	$429,942	$179,288	$13,533	$622,764
10	261X0422-905	LONG. LAP SPLICE	1	5.4	$624,367	$306,295	$5,085	$935,747
10	261X0422-904	FRAME SPLICE INSTL	1	4.8	$639,558	$285,507	$11,278	$936,343
10	261X0422-903	CARGO FB INSTL.	1	9.6	$801,205	$524,627	$0	$1,325,832
10	261X0422-902	OVRWNG LNG INSTL	1	1.5	$110,160	$116,785	$0	$226,945
10	261X0422-901	46/47 SEC. JOIN	1	6.8	$942,446	$378,042	$2,260,627	$3,581,115
10	261X0422-1	46/45 SEC. JOIN	1	7.0	$917,348	$421,840	$486,070	$1,825,259
TOTAL				2003.0	$40,838,297	$30,098,926	$29,633,453	$100,570,675

SUMMARY

C	DESCRIPTION	WEIGHT	RECURRING LABOR	RECURRING MATERIAL	NON RECURRING	TOTAL
1	Skin	897.4	$2,090,000	$9,666,461	$294,113	$12,050,574
2	Stringers/Core	195.3	$1,949,402	$3,858,399	$2,393,315	$8,201,116
3	Frames	215.2	$8,234,400	$2,165,140	$2,986,378	$13,385,918
5	Window Belt	28.0	$3,025,500	$598,500	$295,000	$14,748,092
4	Skin Panel Ass'y	30.8	$6,029,009	$1,595,825	$12,551,763	$3,919,000
6	Door Reinforce. Fab	166.2	$5,803,126	$2,360,576	$2,057,440	$10,221,142
7	Pass. Floor Details	339.6	$745,703	$4,208,880	$162,325	$5,116,908
8	Splice Details Fab	70.5	$6,053,619	$2,144,177	$2,739,857	$6,918,084
10	Assembly	60.0	$6,907,538	$3,500,967	$6,153,262	$10,412,794
	TOTAL	2003.0	$40,838,297	$30,098,926	$29,633,453	$100,570,675

SIDE PANEL COST & WEIGHT BREAKDOWN

FAMILY D (SANDWICH) - LOCAL OPTIMIZATION POTENTIAL

(Weight in lbs per shipset, Cost in $ per 300 shipsets)

C	PART #	DESCRIPTION	QTY	WEIGHT	RECURRING LABOR	RECURRING MATERIAL	NON RECURRING	TOTAL
1	261X0415-3	OUTER SKIN	1	418.7	$908,609	$4,839,957	$36,855	$5,785,421
2	261X0415-8	CORE FAB	1	83.6	$1,183,800	$2,919,136	$2,588	$4,105,524
2	261X0415-5	CORE FAB	1	21.6	$500,100	$753,832	$0	$1,253,932
2	261X0415-6A	CORE FAB	1	0.0	$34,500	$104,500	$2,588	$141,588
2	261X0415-7A	CORE FAB	1	0.0	$34,500	$104,500	$0	$139,000
2	261X0415-20,21	LONG. EDGE BAND	0	0.0	$0	$0	$0	$0
2	261X0415-22 TO 26	CIRC. EDGE BAND	5	6.1	$38,000	$117,000	$234,930	$389,930
5	261X0415-K,L,M	FRM ATTACH "T"	23	10.3	$719,000	$103,500	$161,500	$984,000
2	261X0415-10,11	PASS. CLOSEOUT	2	12.9	$191,000	$243,000	$140,682	$574,682
2	261X0415-9,12	PASS. CLOSEOUT	2	2.9	$57,100	$59,856	$9,660	$126,616
2	261X0415-13 TO 15	OVRWNG CLOSEOUT	3	2.9	$64,900	$59,856	$75,171	$199,927
2	261X0415-4	CORE PANEL ASSY.	1	9.0	$4,060,800	$668,000	$214,531	$4,943,331
2	261X0415-27,28	FLOOR TRUSS TIE	15	6.6	$255,000	$121,750	$313,711	$690,461
1	261X0415-3	INNER SKIN	1	403.1	$776,700	$4,668,638	$36,855	$5,482,193
3	261X0416-1 TO 5	FUSELAGE FRAMES	13	188.1	$3,033,150	$590,809	$735,756	$4,359,715
6	261X0416-6	AUX PASS FRAMES	2	26.7	$527,700	$178,783	$252,920	$959,403
4	261X0415-901,1	PANEL BOND ASSY.	1	66.7	$4,680,948	$621,000	$11,031,137	$16,333,085
6	261X0414-1,3	LWR SILL OUT CHRD	2	5.3	$140,000	$99,216	$113,732	$352,948
6	261X0414-2	LWR SILL OUT CHRD	1	8.3	$170,000	$161,352	$48,244	$379,596
6	261X0414-4,6	UPP SILL OUT CHRD	2	5.3	$140,000	$107,265	$113,732	$360,997
6	261X0414-5	UPP SILL OUT CHRD	1	8.4	$172,000	$163,296	$48,244	$383,540
6	261X0414-7,8	LWR SILL INR CHRD	2	3.1	$92,000	$84,226	$57,885	$234,111
6	261X0414-9,10	EDGE FRAME	1	76.4	$1,194,000	$536,328	$401,774	$2,132,102
6	261X0419-11 TO 26	INTERCOSTALS	0	0.0	$0	$0	$0	$0
6	261X0419-27,28	SHEAR TIES	2	0.4	$9,000	$5,654	$17,119	$31,773
6	261X0414-35 TO 42	BACKUP FITTING	16	5.7	$72,000	$82,696	$39,271	$193,967
6	261X0414-47	ANGLE	2	0.1	$1,875	$1,200	$16,667	$19,742
6	261X0413-3,4,5,21	FRAME SPLICE	8	1.7	$130,000	$16,708	$201,791	$348,499
6	261X0413-6	SILL BRACKET	1	0.1	$3,000	$1,163	$15,989	$20,152
6	261X0413-7	SILL BRACKET	1	0.2	$5,000	$2,697	$19,379	$27,076
6	261X0413-8	SILL BRACKET	1	0.1	$3,000	$1,488	$12,372	$16,860
6	261X0413-9	SILL BRACKET	1	0.1	$3,000	$1,748	$13,503	$18,251
6	261X0413-20	BRACKET	2	0.0	$2,000	$949	$14,407	$17,356
6	261X0413-10,11	AL FITTING	2	1.1	$210,000	$86,652	$36,225	$332,877
6	261X0413-12,13	AL FITTING	2	1.3	$195,000	$28,188	$30,705	$253,893
6	261X0413-14,15	AL FITTING	2	1.1	$570,000	$85,180	$78,919	$734,099
6	261X0413-16,17	AL FITTING	2	1.0	$495,000	$52,992	$76,504	$624,496
6	261X0413-18,19	AL HINGE FITTING	2	4.6	$1,260,000	$263,736	$197,168	$1,720,904
5	417-1A	2D BRAID WIN. FRM.	14	28.0	$3,025,500	$598,500	$295,000	$3,919,000
5	261X0413-9061	F/G ISOLATION FAB	0	0.0	$0	$0	$0	$0
5	261X0413-906	F/G ISOLATION BOND	0	0.0	$0	$0	$0	$0
4	261X0413-905	WINDOW FRM INSTL.	0	0.0	$0	$0	$0	$0
10	261X0413-904	INTERCOSTAL ASSY.	0	0.0	$0	$0	$0	$0
10	261X0413-903	LWR SILL ASSY.	1	0.4	$67,442	$24,123	$36,686	$128,251
10	261X0413-902	UPR SILL ASSY.	1	0.4	$68,250	$25,768	$36,686	$130,704
10	261X0413-901	DOOR STRCT ASSY.	1	1.0	$275,742	$61,760	$486,753	$824,255
10	261X0413-1	DOOR INSTL.	1	13.0	$799,978	$861,876	$2,106,527	$3,768,381
7	261X0422-9,10	PASS. FLOOR BEAM	10	273.1	$208,352	$1,460,403	$26,387	$1,695,141
7	261X0412-11,12	STANCHION	10	65.9	$175,500	$644,038	$67,969	$887,507
8	261X0412-14	AL CARGO FB SPLIC	10	6.9	$1,425,000	$659,919	$73,830	$2,158,749
8	261X0412-4,5,6	SPLICE PLATE	2	10.7	$105,000	$177,000	$888,492	$1,170,492
8	261X0412-7	FRAME SPLICE	10	5.6	$175,200	$47,175	$189,561	$411,935
8	261X0412-8	FRAME SPL. FILLER	10	0.5	$14,000	$8,579	$300,394	$322,972
8	261X0412-2,16	END FRAME	1	15.5	$313,800	$100,440	$752,551	$1,166,791
8	261X0412-3	SHEAR TIES	2	1.6	$118,000	$17,107	$323,463	$458,570
10	261X0412-908	LOWER LOBE ASSY.	0	0.0	$0	$0	$0	$0

SIDE PANEL COST & WEIGHT BREAKDOWN

FAMILY D (SANDWICH) - LOCAL OPTIMIZATION POTENTIAL

(Weight in lbs per shipset, Cost in $ per 300 shipsets)

C	PART #	DESCRIPTION	QTY	WEIGHT	RECURRING LABOR	RECURRING MATERIAL	NON RECURRING	TOTAL
10	261X0412-907	PASS. FB INSTL.	1	1.4	$107,536	$82,165	$6,767	$196,467
10	261X0412-906	PASS. STAN. INSTL.	1	1.6	$155,033	$93,721	$13,533	$262,287
10	261X0412-905	LONG. LAP SPLICE	0	0.0	$0	$0	$0	$0
10	261X0412-904	FRAME SPLICE	1	2.1	$201,275	$126,411	$9,022	$336,708
10	261X0412-903	CARGO FB INSTL.	1	4.9	$335,857	$276,076	$0	$611,932
10	261X0412-902	OVRWNG LNG INSTL	1	1.4	$58,921	$109,163	$0	$168,084
10	261X0412-901	46/47 SEC. JOIN	1	7.1	$572,716	$402,441	$485,578	$1,460,735
10	261X0412-1	46/45 SEC. JOIN	1	6.9	$572,716	$387,391	$485,578	$1,445,685
TOTAL				1831.4	$30,708,496	$24,100,903	$21,387,291	$76,196,690

SUMMARY

C	DESCRIPTION	WEIGHT	RECURRING LABOR	RECURRING MATERIAL	NON RECURRING	TOTAL
1	Skin	821.8	$1,685,309	$9,508,595	$73,711	$11,267,615
2	Stringers/Core	145.6	$6,419,700	$5,151,430	$993,861	$12,564,991
3	Frames	188.1	$3,033,150	$590,809	$735,756	$4,359,715
5	Window Belt	38.3	$3,744,500	$702,000	$456,500	$4,903,000
4	Skin Panel Ass'y	66.7	$4,680,948	$621,000	$11,031,137	$16,333,085
6	Door Reinforce. Fab	151.0	$5,394,575	$1,961,517	$1,806,547	$9,162,639
7	Pass. Floor Details	339.0	$383,852	$2,104,440	$94,356	$2,582,647
8	Splice Details Fab	40.7	$2,151,000	$1,010,219	$2,528,291	$5,689,510
10	Assembly	40.2	$3,215,463	$2,450,894	$3,667,131	$9,333,488
	TOTAL	1831.4	$30,708,496	$24,100,903	$21,387,291	$76,196,690

APPENDIX D

FAMILY D DESIGN DRAWINGS

D-1

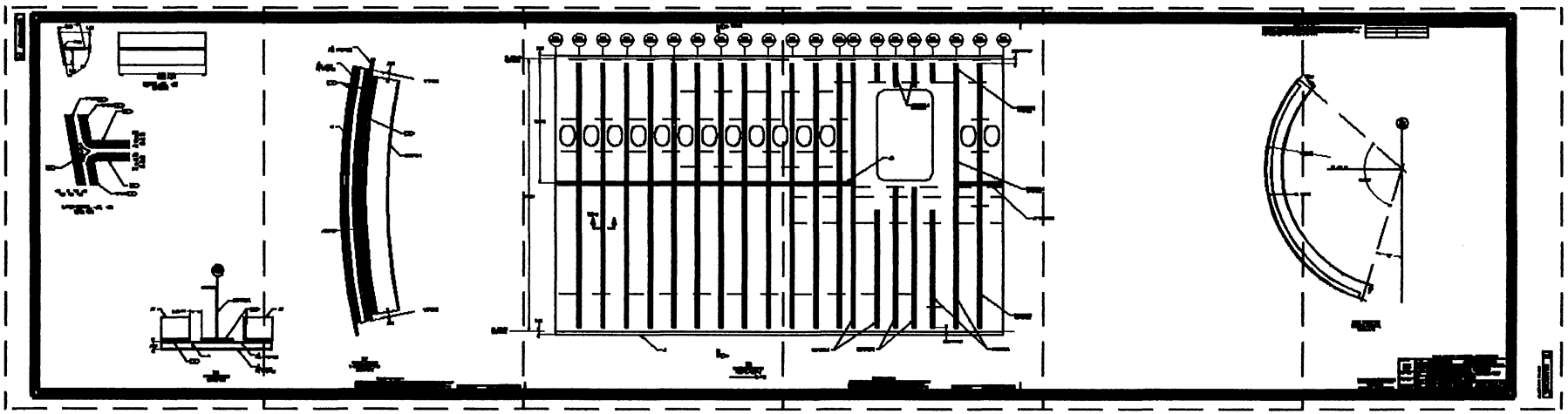

D-2 D-3 D-4 D-5 D-6 D-7

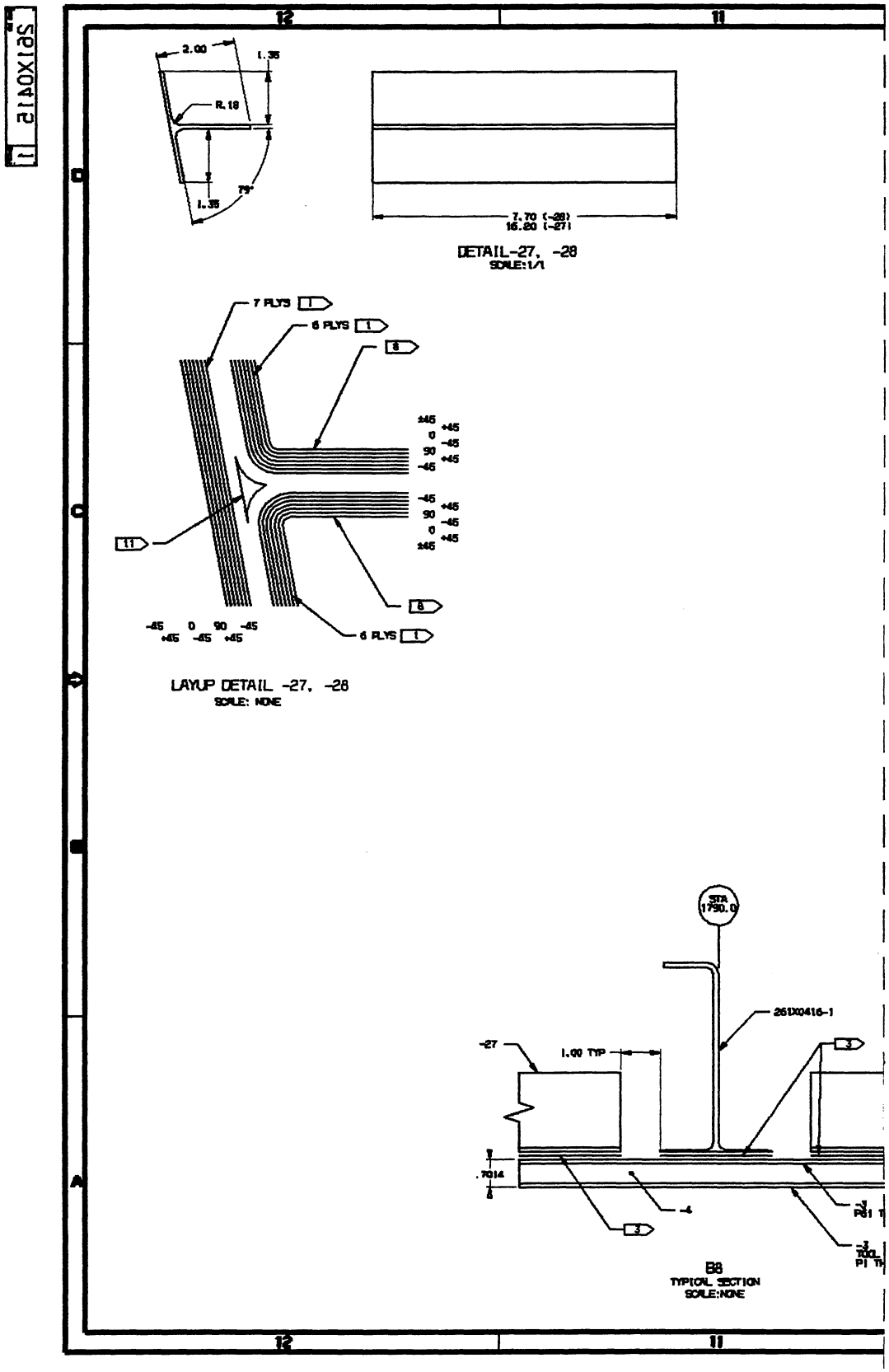
2.00
1.35
R.18
1.35
79°
7.70 (-28)
16.20 (-27)
DETAIL-27, -28
SCALE:1/1
7 PLYS 1
6 PLYS 1
8
±45
0
90
-45
+45
11
8
6 PLYS 1
LAYUP DETAIL -27, -28
SCALE: NONE
STA 1790.0
26100416-1
-27
1.00 TYP
3
.7014
4
B8
TYPICAL SECTION
SCALE:NONE

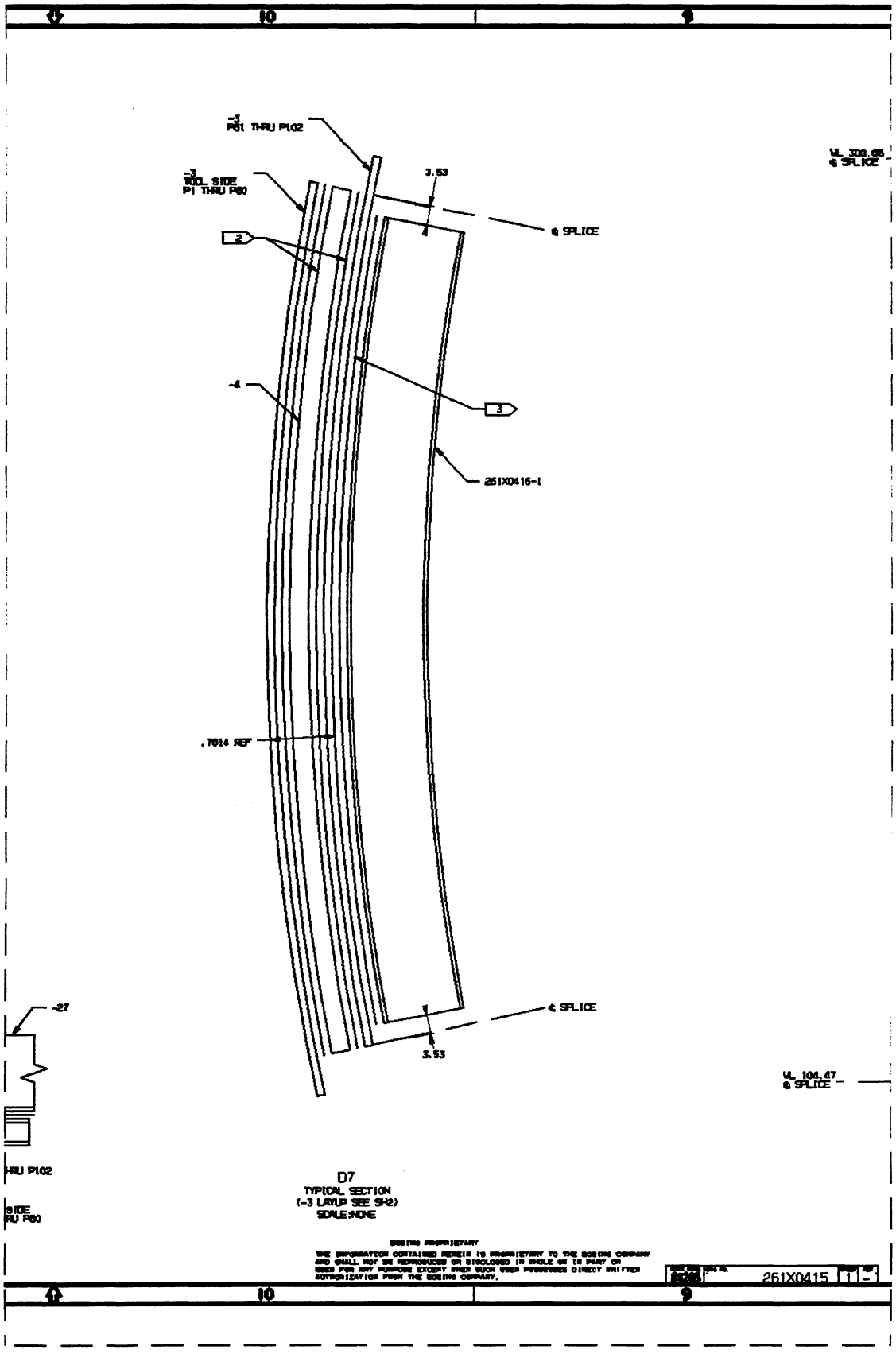

D7
TYPICAL SECTION
(-3 LAYUP SEE SH2)
SCALE:NONE

BOEING PROPRIETARY
THE INFORMATION CONTAINED HEREIN IS PROPRIETARY TO THE BOEING COMPANY AND SHALL NOT BE REPRODUCED OR DISCLOSED IN WHOLE OR IN PART OR USED FOR ANY PURPOSE EXCEPT WHEN SUCH USE POSSESSES DIRECT WRITTEN AUTHORIZATION FROM THE BOEING COMPANY.

261X0415

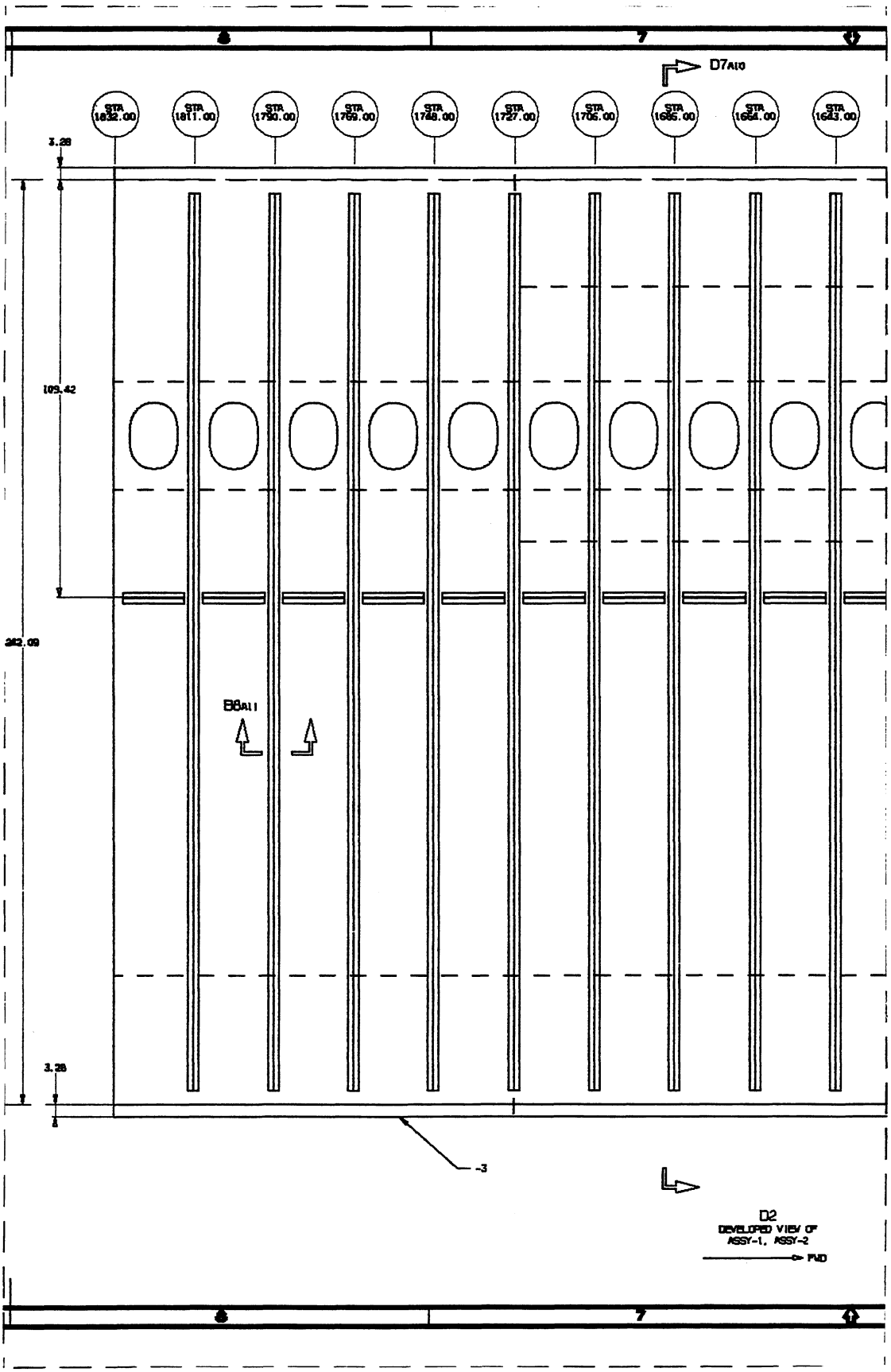
8
7
D7A10
STA 1832.00
STA 1811.00
STA 1790.00
STA 1769.00
STA 1748.00
STA 1727.00
STA 1706.00
STA 1685.00
STA 1664.00
STA 1643.00
3.28
109.42
262.09
B8A11
3.28
-3
D2
DEVELOPED VIEW OF
ASSY-1, ASSY-2
FWD
8
7

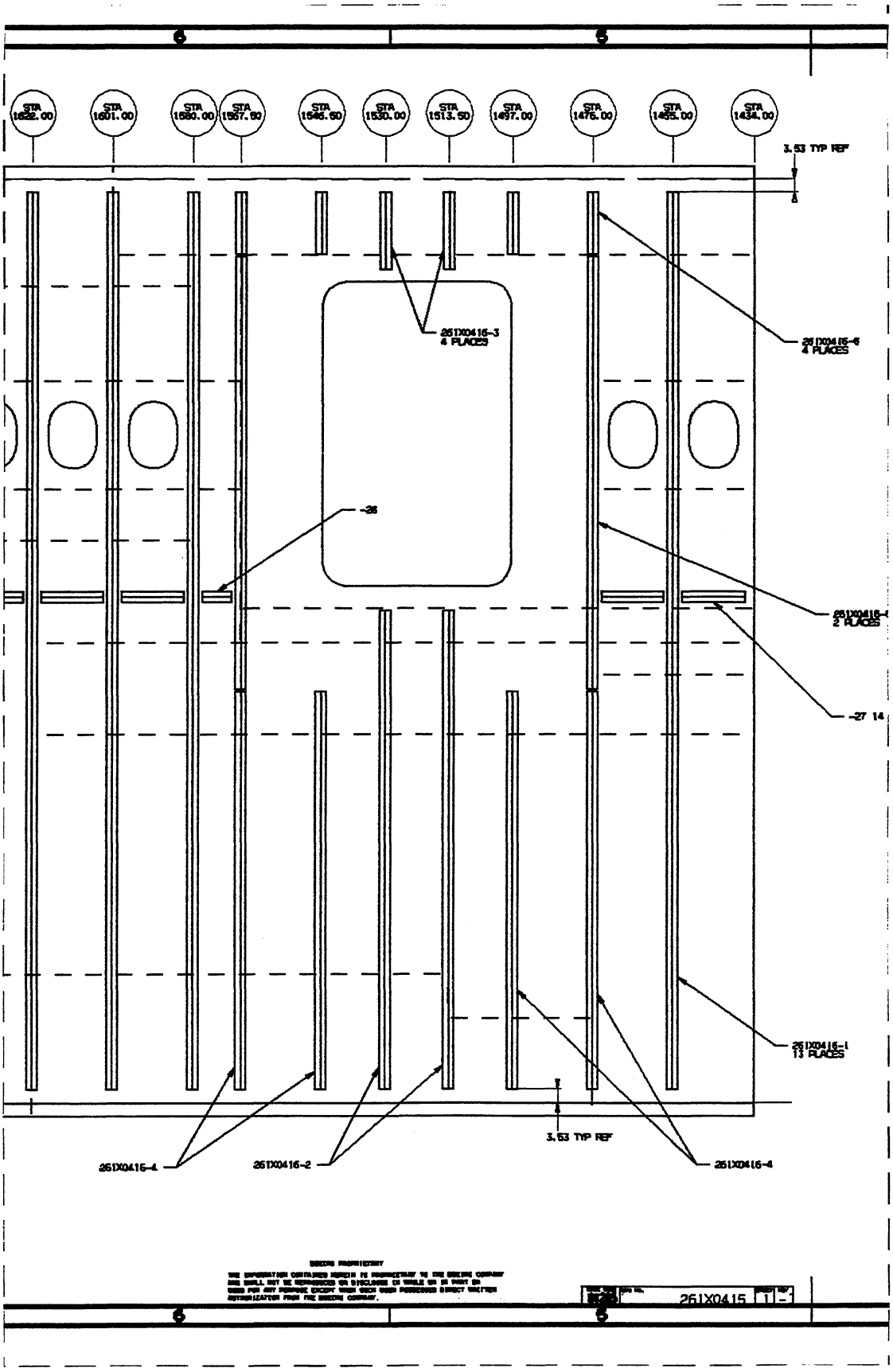
STA 1622.00
STA 1601.00
STA 1580.00
STA 1567.50
STA 1546.50
STA 1530.00
STA 1513.50
STA 1497.00
STA 1476.00
STA 1455.00
STA 1434.00
3.53 TYP REF
261X0416-3
4 PLACES
261X0416-6
4 PLACES
-28
261X0416-4
2 PLACES
-27 14
261X0416-1
13 PLACES
3.53 TYP REF
261X0416-4
261X0416-2
261X0416-4
261X0415

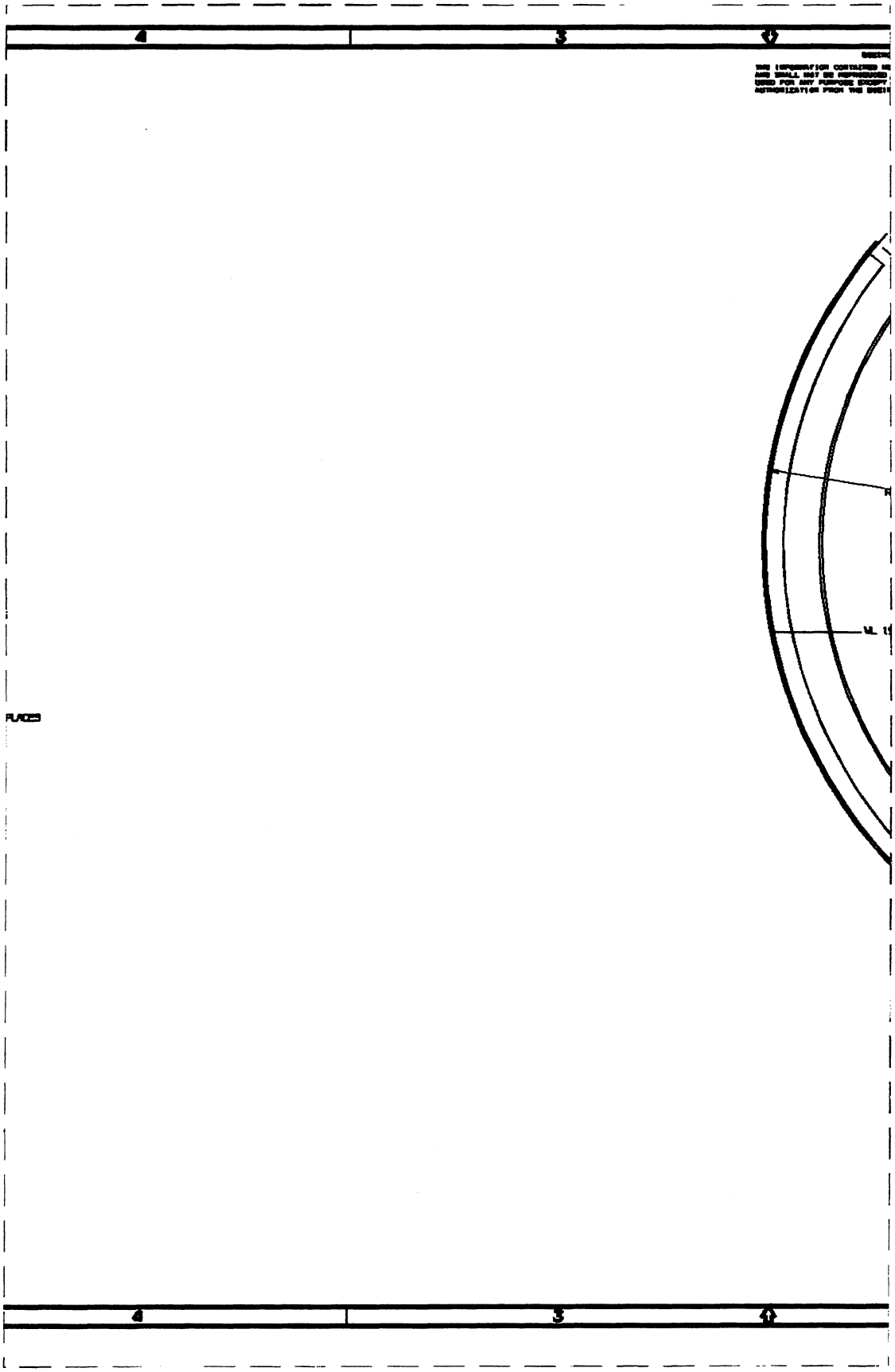

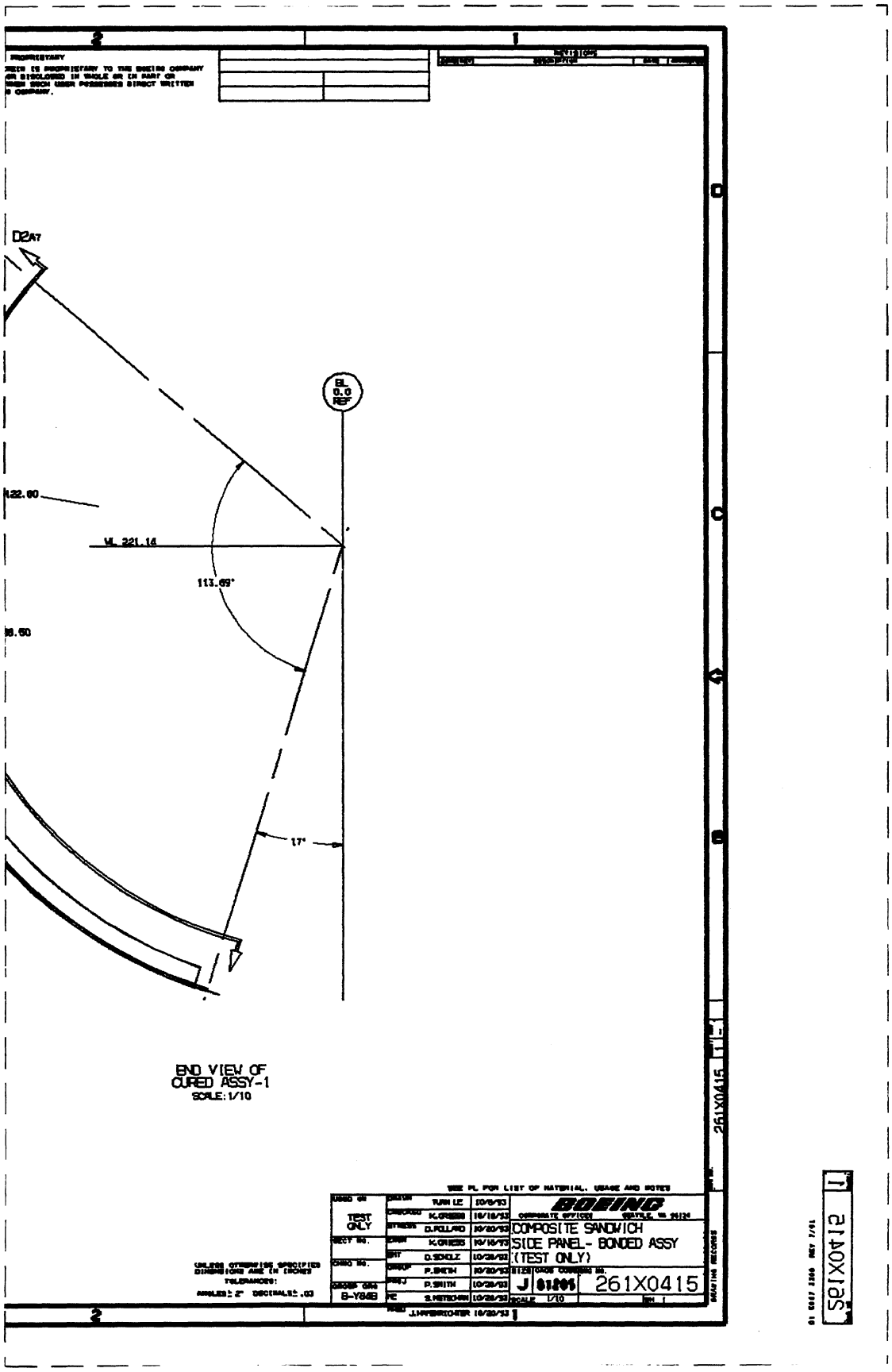

D2A7
BL 0.0 REF
122.80
WL 221.14
113.69°
17°
END VIEW OF
CURED ASSY-1
SCALE: 1/10
TEST ONLY
B-Y84B
BOEING
COMPOSITE SANDWICH
SIDE PANEL- BONDED ASSY
(TEST ONLY)
261X0415
SCALE 1/10

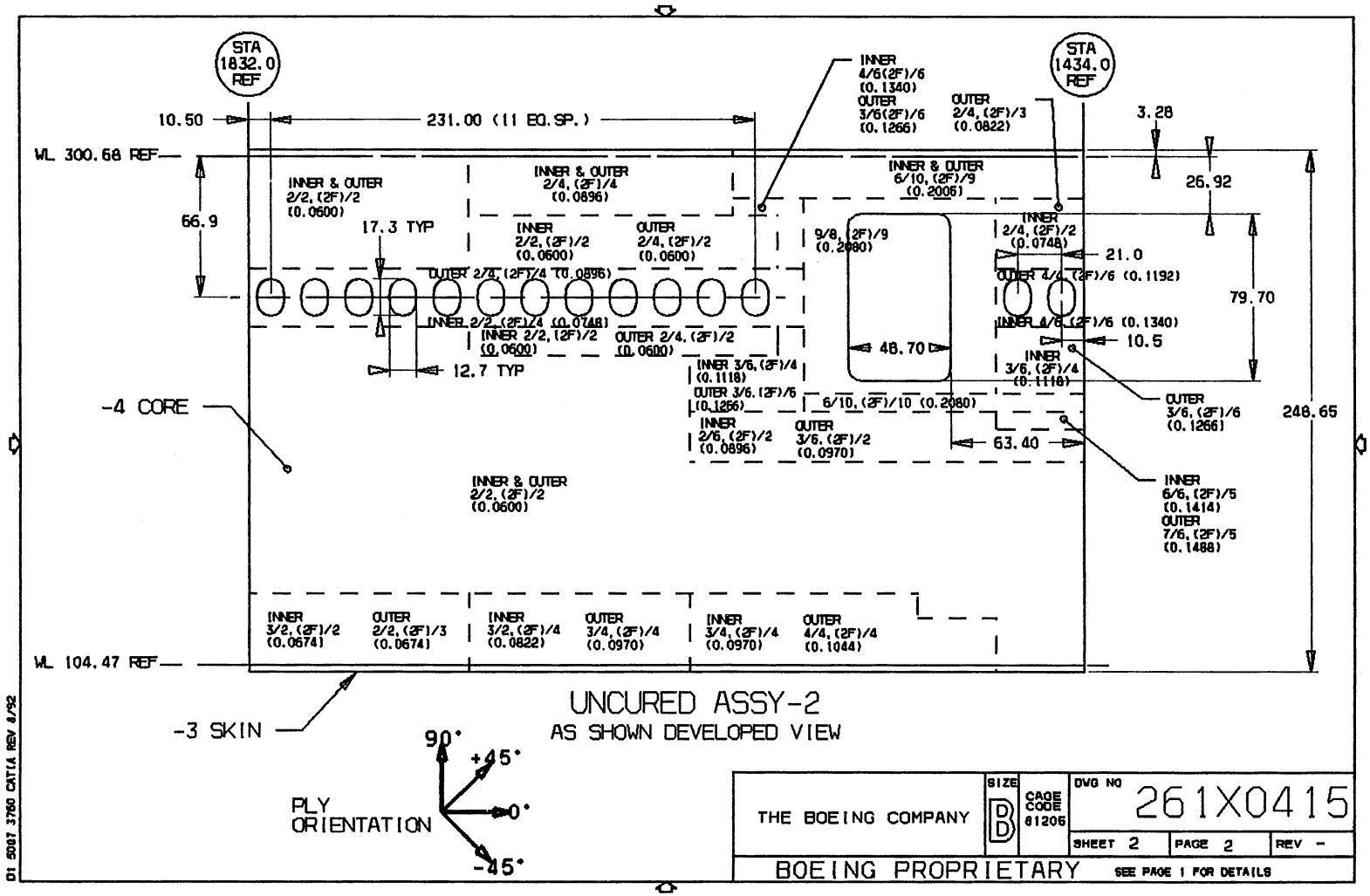
STA 1832.0 REF
STA 1434.0 REF
10.50
231.00 (11 EQ.SP.)
WL 300.68 REF
WL 104.47 REF
66.9
17.3 TYP
12.7 TYP
INNER & OUTER 2/2,(2F)/2 (0.0600)
INNER & OUTER 2/4,(2F)/4 (0.0896)
INNER 4/6(2F)/6 (0.1340)
OUTER 3/6(2F)/6 (0.1266)
OUTER 2/4,(2F)/3 (0.0822)
INNER & OUTER 6/10,(2F)/9 (0.2006)
3.28
26.92
INNER 2/4,(2F)/2 (0.0748)
21.0
OUTER 4/4,(2F)/6 (0.1192)
79.70
INNER 4/6,(2F)/6 (0.1340)
10.5
INNER 3/6,(2F)/4 (0.1118)
OUTER 3/6,(2F)/6 (0.1266)
248.65
INNER 2/2,(2F)/2 (0.0600)
OUTER 2/4,(2F)/2 (0.0600)
INNER 2/2,(2F)/4 (0.0748)
OUTER 2/4,(2F)/4 (0.0896)
9/8,(2F)/9 (0.2080)
48.70
INNER 3/6,(2F)/4 (0.1118)
OUTER 3/6,(2F)/6 (0.1266)
6/10,(2F)/10 (0.2080)
INNER 2/6,(2F)/2 (0.0896)
OUTER 3/5,(2F)/2 (0.0970)
63.40
-4 CORE
INNER & OUTER 2/2,(2F)/2 (0.0600)
INNER 6/6,(2F)/5 (0.1414)
OUTER 7/6,(2F)/5 (0.1488)
INNER 3/2,(2F)/2 (0.0674)
OUTER 2/2,(2F)/3 (0.0674)
INNER 3/2,(2F)/4 (0.0822)
OUTER 3/4,(2F)/4 (0.0970)
INNER 3/4,(2F)/4 (0.0970)
OUTER 4/4,(2F)/4 (0.1044)
-3 SKIN
UNCURED ASSY-2
AS SHOWN DEVELOPED VIEW
PLY ORIENTATION
90°
+45°
0°
-45°
THE BOEING COMPANY
SIZE D
CAGE CODE 81205
DWG NO 261X0415
SHEET 2
PAGE 2
REV -
BOEING PROPRIETARY
SEE PAGE 1 FOR DETAILS
01 5087 3760 CATIA REV A/92

D-9

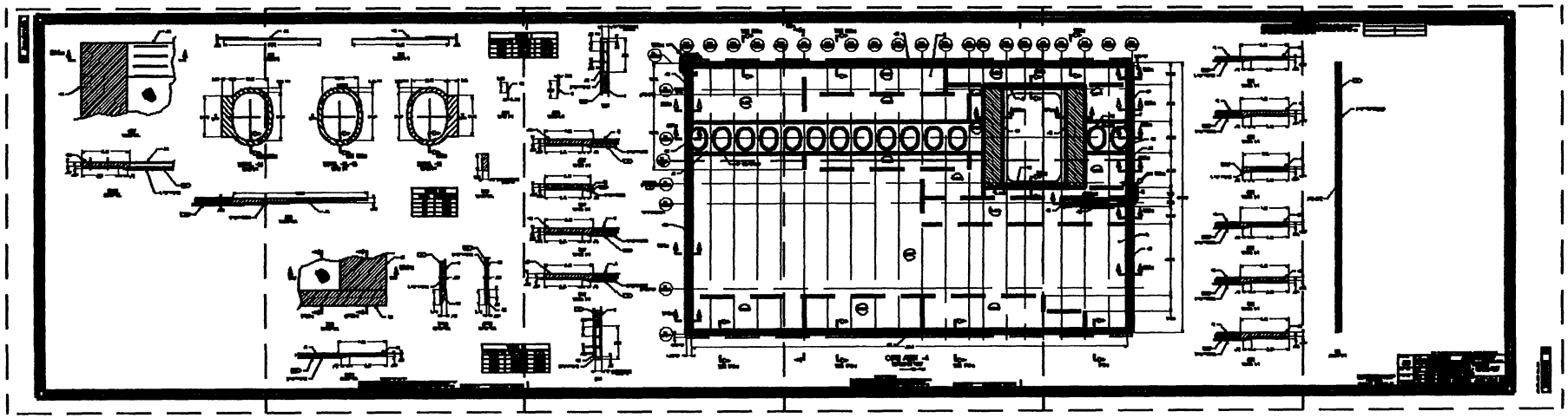

D-10 D-11 D-12 D-13 D-14 D-15

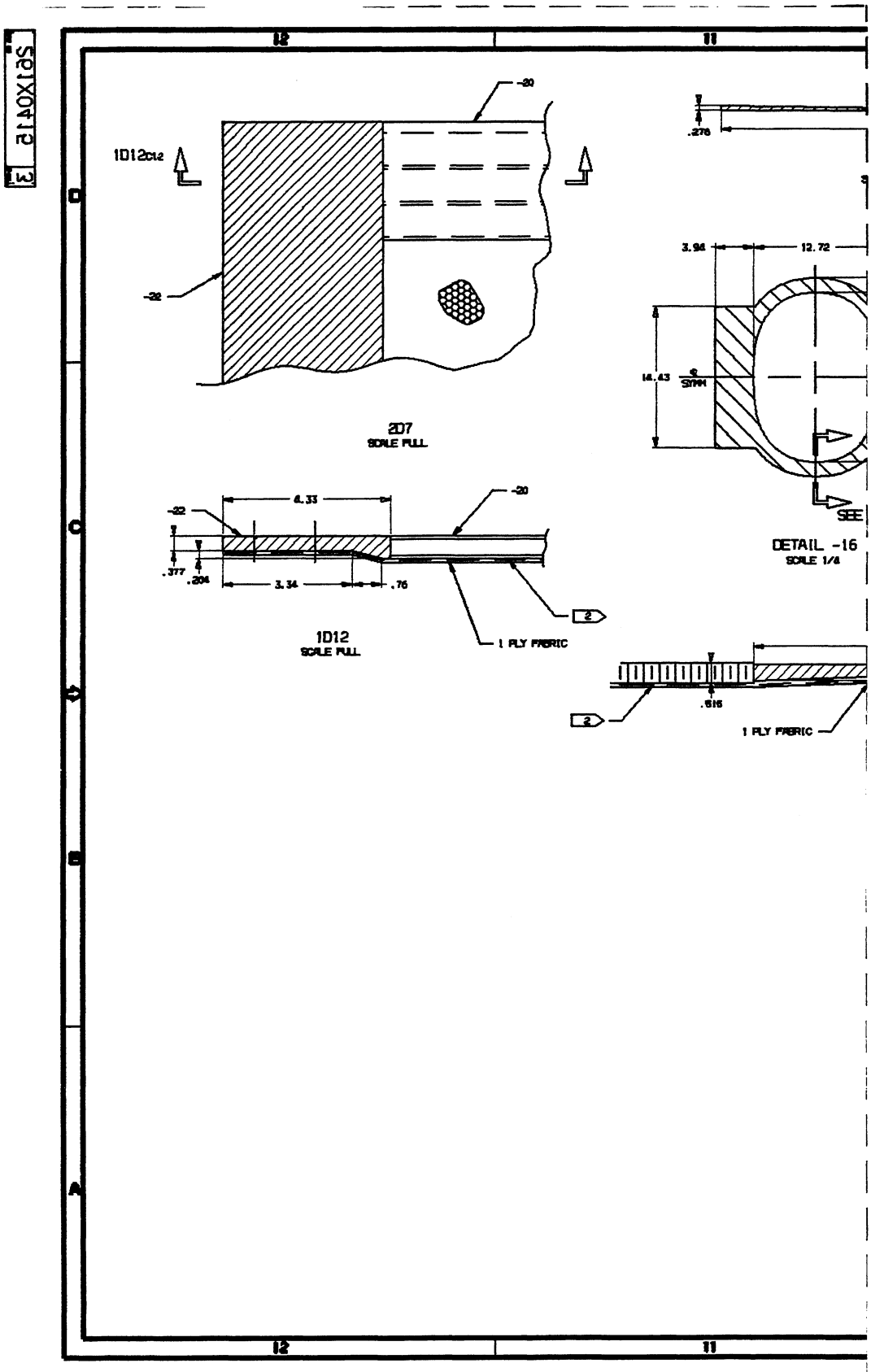

1D12C12
-20
-22
2D7
SCALE FULL
4.33
-22
-20
.377
.204
3.34
.76
1D12
SCALE FULL
1 PLY FABRIC
2
.276
3.94
12.72
14.43
SYMM
SEE
DETAIL -16
SCALE 1/4
.616
1 PLY FABRIC
2

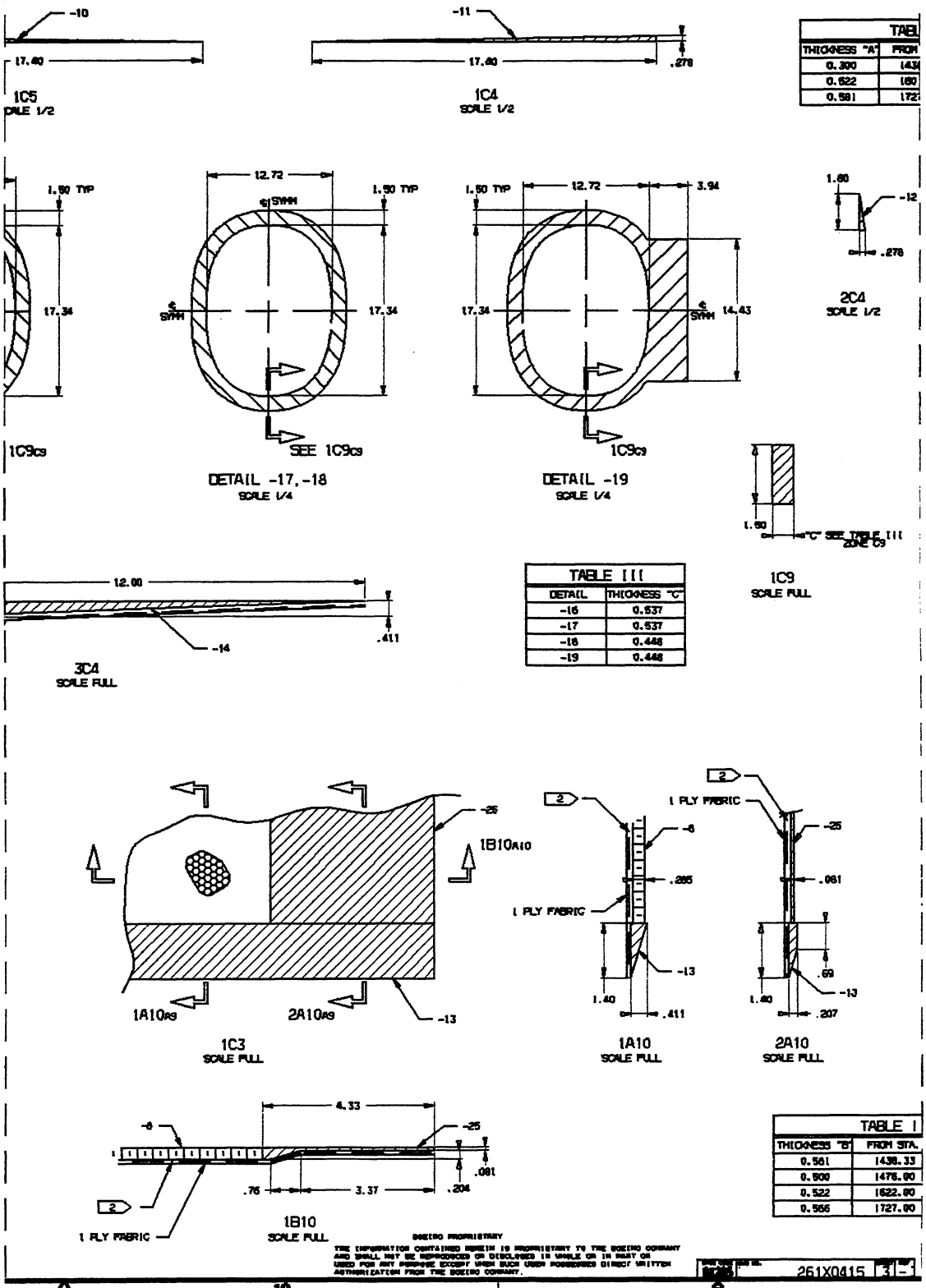
-10
17.40
1C5
SCALE 1/2
-11
17.40
.278
1C4
SCALE 1/2
TABL
THICKNESS "A"
FROM
0.300
0.622
0.581
1.50 TYP
17.34
1C9c9
12.72
1.50 TYP
SYMM
17.34
SEE 1C9c9
DETAIL -17,-18
SCALE 1/4
1.50 TYP
12.72
3.94
17.34
14.43
1C9c9
DETAIL -19
SCALE 1/4
1.60
-12
.278
2C4
SCALE 1/2
1.50
"C" SEE TABLE III
ZONE C9
1C9
SCALE FULL
12.00
-14
.411
3C4
SCALE FULL
TABLE III
DETAIL
THICKNESS "C"
-16
0.537
-17
0.537
-18
0.448
-19
0.448
-25
1B10A10
1A10A9
2A10A9
-13
1C3
SCALE FULL
2
1 PLY FABRIC
-6
.285
-13
1.40
.411
1A10
SCALE FULL
2
1 PLY FABRIC
-25
.081
.69
-13
1.40
.207
2A10
SCALE FULL
4.33
-6
-25
.081
.76
3.37
.204
2
1 PLY FABRIC
1B10
SCALE FULL
TABLE I
THICKNESS "B"
FROM STA.
0.581
1438.33
0.900
1476.00
0.522
1622.00
0.566
1727.00
BOEING PROPRIETARY
THE INFORMATION CONTAINED HEREIN IS PROPRIETARY TO THE BOEING COMPANY AND SHALL NOT BE REPRODUCED OR DISCLOSED IN WHOLE OR IN PART OR USED FOR ANY PURPOSE EXCEPT WHEN SUCH USES POSSESSED DIRECT WRITTEN AUTHORIZATION FROM THE BOEING COMPANY.
261X0415
3

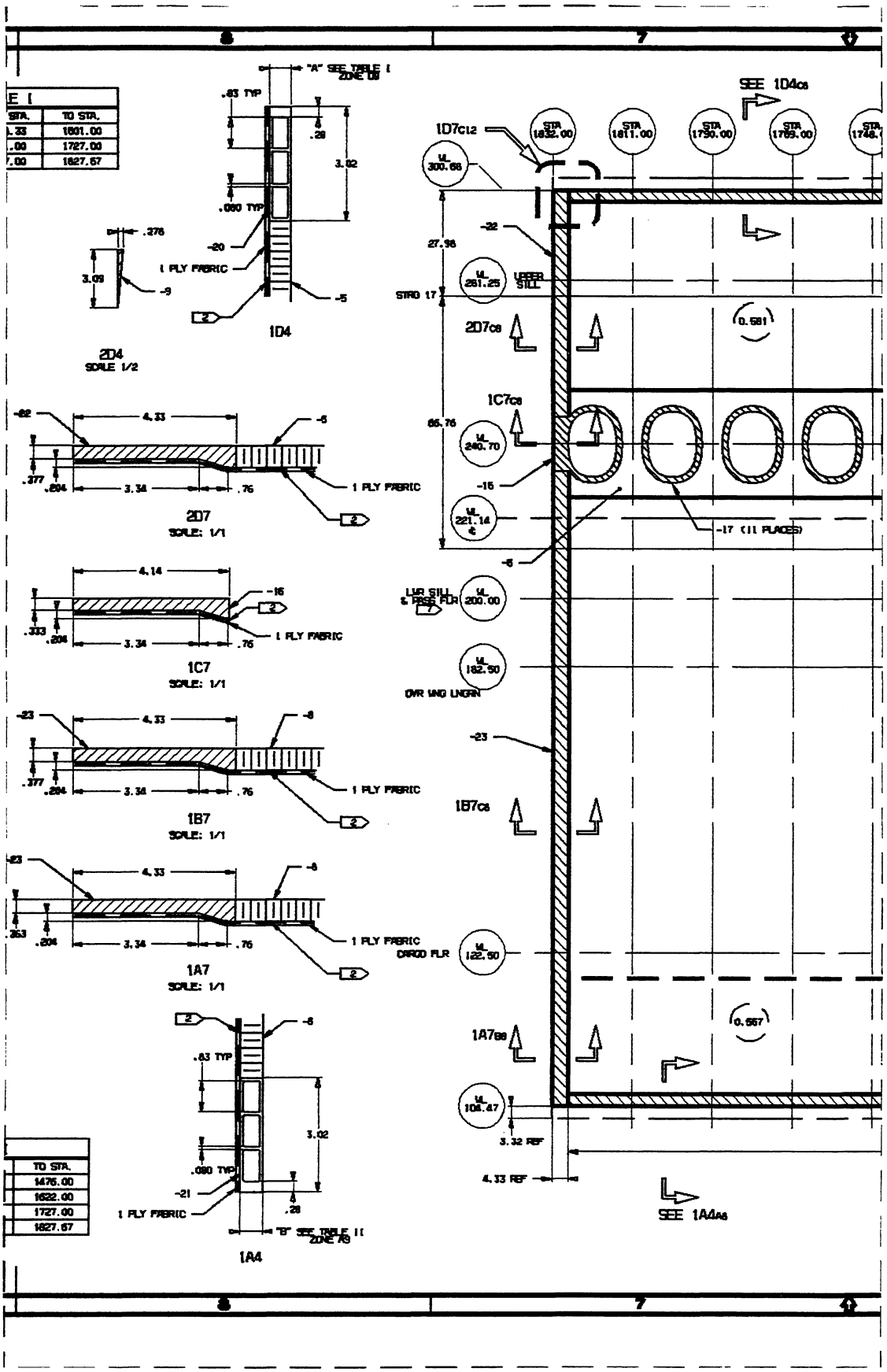

"A" SEE TABLE I ZONE D9
.83 TYP
.28
3.02
.080 TYP
-20
1 PLY FABRIC
-5
.276
3.09
-9
1D4
2D4
SCALE 1/2
-22
4.33
-5
.377
.204
3.34
.76
1 PLY FABRIC
2D7
SCALE: 1/1
4.14
-16
.333
.204
3.34
.76
1 PLY FABRIC
1C7
SCALE: 1/1
-23
4.33
-8
.377
.204
3.34
.76
1 PLY FABRIC
1B7
SCALE: 1/1
-23
4.33
-8
.363
.204
3.34
.76
1 PLY FABRIC
1A7
SCALE: 1/1
-8
.83 TYP
3.02
.080 TYP
-21
1 PLY FABRIC
.28
"B" SEE TABLE II ZONE A9
1A4
TO STA.
1476.00
1622.00
1727.00
1827.67
SEE 1D4C8
1D7C12
STA 1832.00
STA 1811.00
STA 1790.00
STA 1769.00
WL 300.66
-22
27.98
WL 281.25
UPPER SILL
STRD 17
2D7C8
0.581
1C7C8
66.76
WL 240.70
-16
WL 221.14
-17 (11 PLACES)
-6
LWR SILL & PASS FLR
WL 200.00
WL 182.50
OVR WNG LNGRN
-23
1B7C8
CARGO FLR
WL 122.50
1A7B8
0.567
WL 104.47
3.32 REF
4.33 REF
SEE 1A4A8

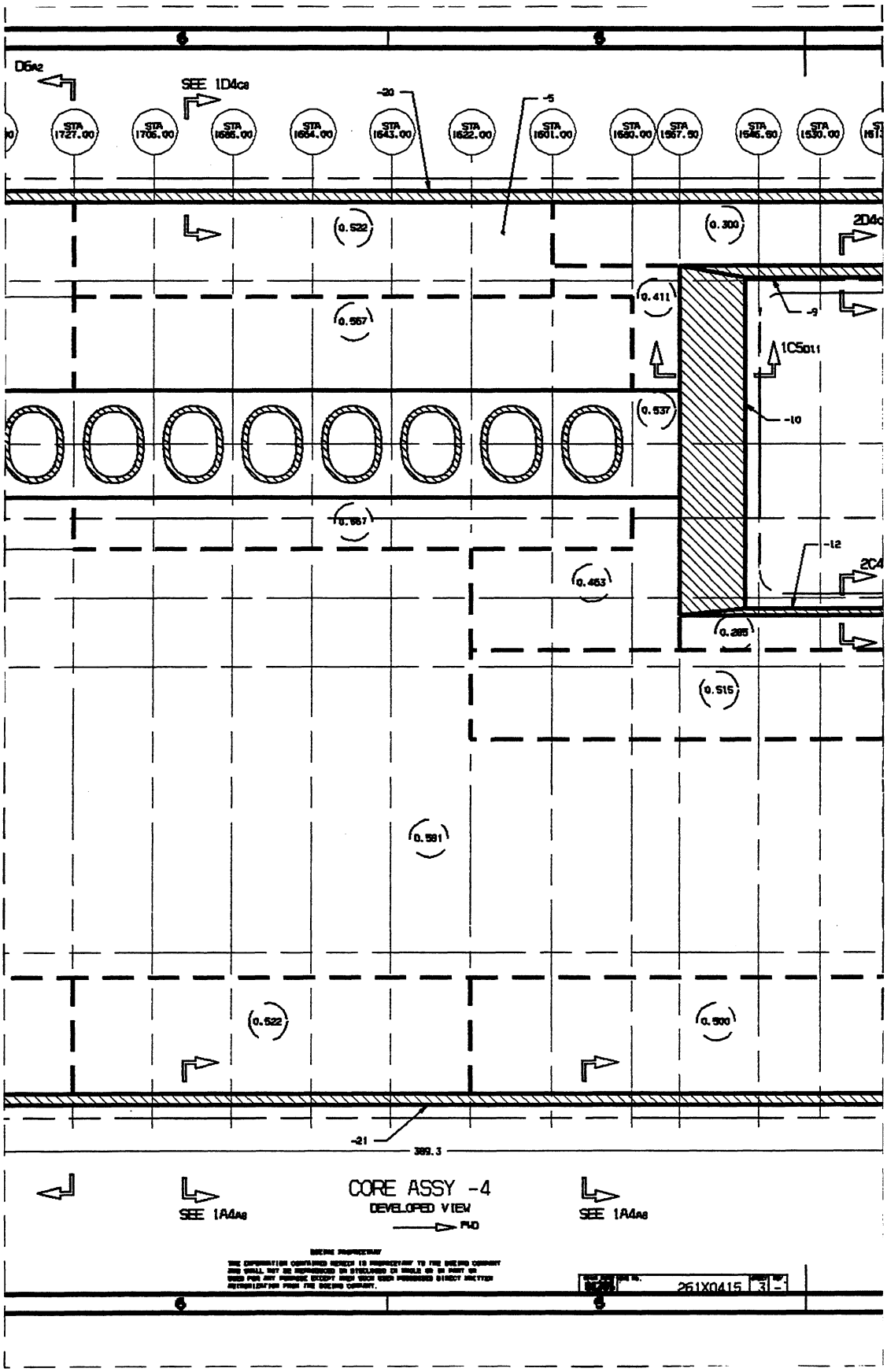
D6A2
SEE 1D4C8
STA 1727.00
STA 1706.00
STA 1686.00
STA 1664.00
STA 1643.00
STA 1622.00
STA 1601.00
STA 1580.00
STA 1567.50
STA 1545.50
STA 1530.00
-20
-5
0.522
0.300
2D4C
0.411
0.557
-9
1C5D11
0.537
-10
0.657
-12
2C4
0.463
0.285
0.515
0.581
0.522
0.500
-21
389.3
SEE 1A4A8
CORE ASSY -4
DEVELOPED VIEW
FWD
SEE 1A4A8
261X0415

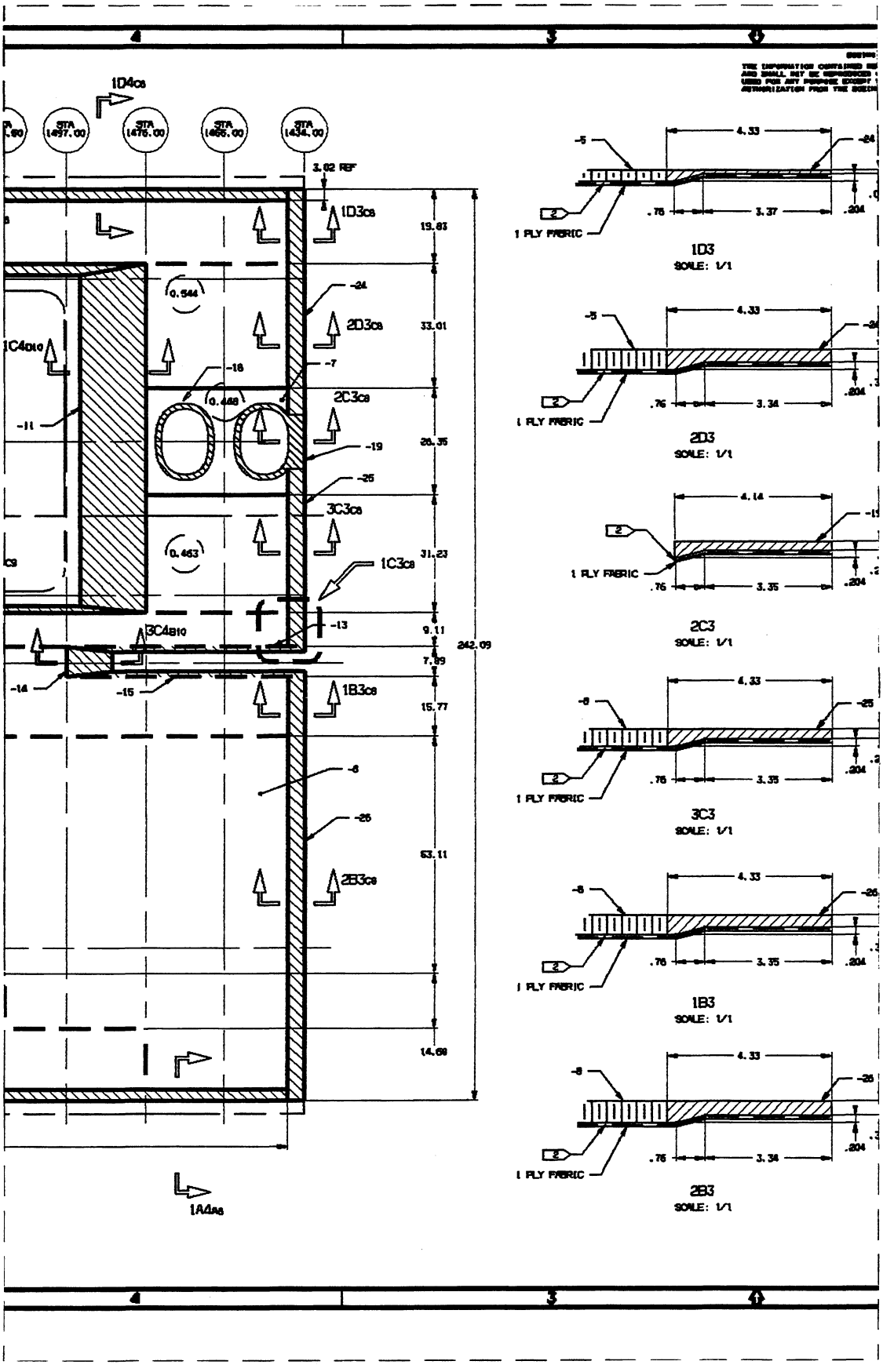

1D4C8
STA 1497.00
STA 1476.00
STA 1455.00
STA 1434.00
3.02 REF
1D3C8
19.83
0.544
-24
2D3C8
33.01
1C4D10
-18
-7
0.448
2C3C8
-11
-19
26.35
-25
3C3C8
0.463
31.23
1C3C8
-13
3C4B10
9.11
242.09
7.89
-14
-15
1B3C8
15.77
-8
-26
53.11
2B3C8
14.69
1A4A8
4.33
-5
-24
1 PLY FABRIC
.76
3.37
.204
1D3
SCALE: 1/1
4.33
-5
1 PLY FABRIC
.76
3.34
.204
2D3
SCALE: 1/1
4.14
1 PLY FABRIC
.76
3.35
.204
2C3
SCALE: 1/1
4.33
-8
-25
1 PLY FABRIC
.76
3.35
.204
3C3
SCALE: 1/1
4.33
-8
-26
1 PLY FABRIC
.76
3.35
.204
1B3
SCALE: 1/1
4.33
-8
-26
1 PLY FABRIC
.76
3.34
.204
2B3
SCALE: 1/1

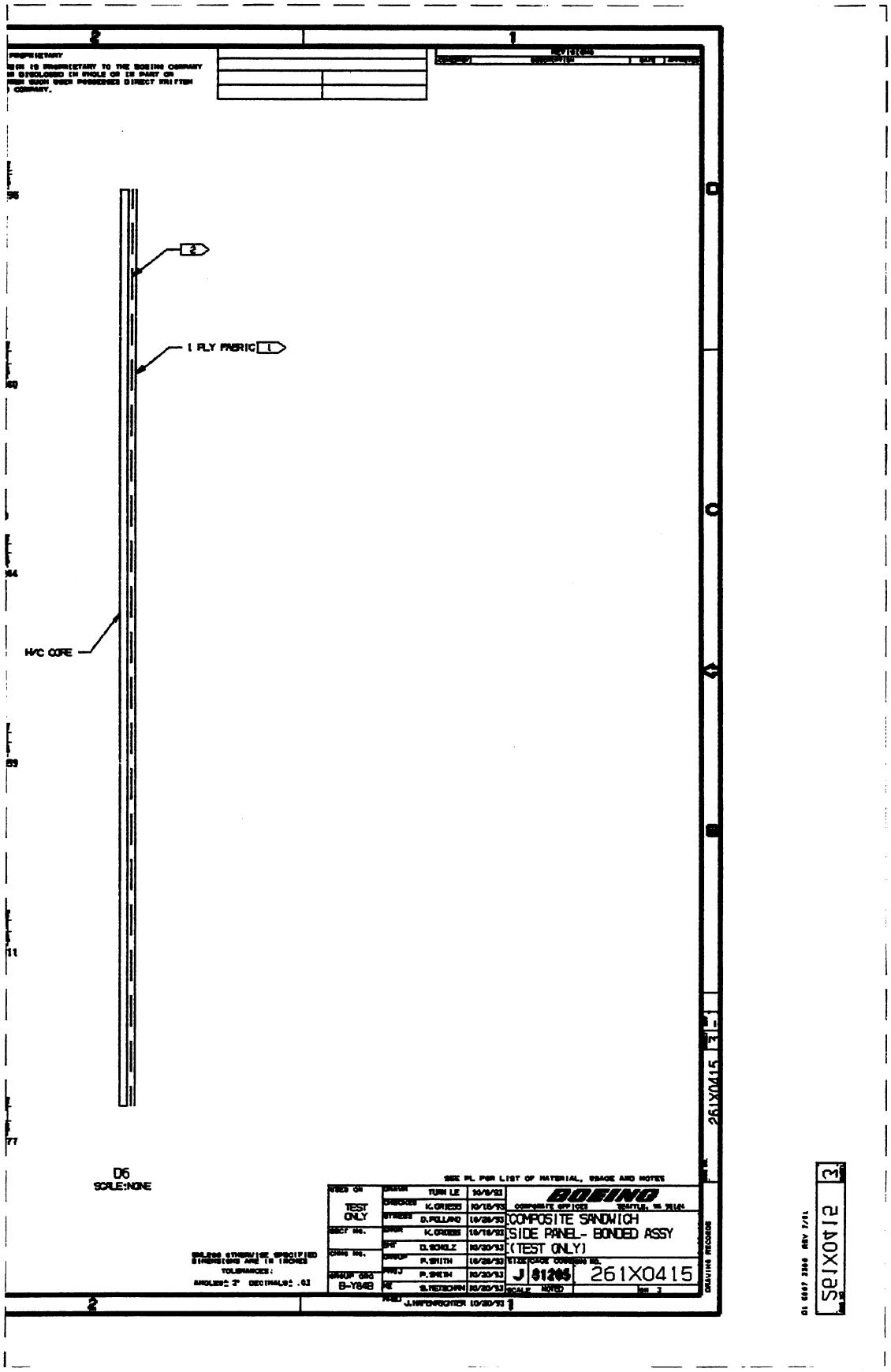

PROPRIETARY
1 PLY FABRIC
H/C CORE
D6
SCALE:NONE
SEE PL FOR LIST OF MATERIAL, USAGE AND NOTES
TEST ONLY
B-Y84B
BOEING
COMPOSITE SANDWICH
SIDE PANEL- BONDED ASSY
(TEST ONLY)
J
261X0415
SCALE NOTED
261X0415

D-16

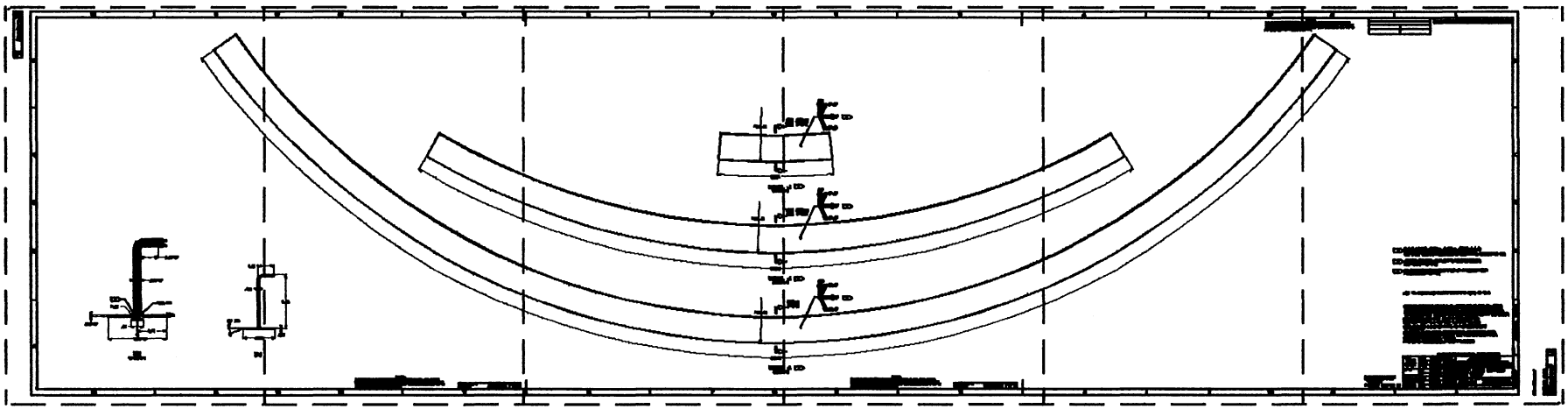

D-17 D-18 D-19 D-20 D-21 D-22

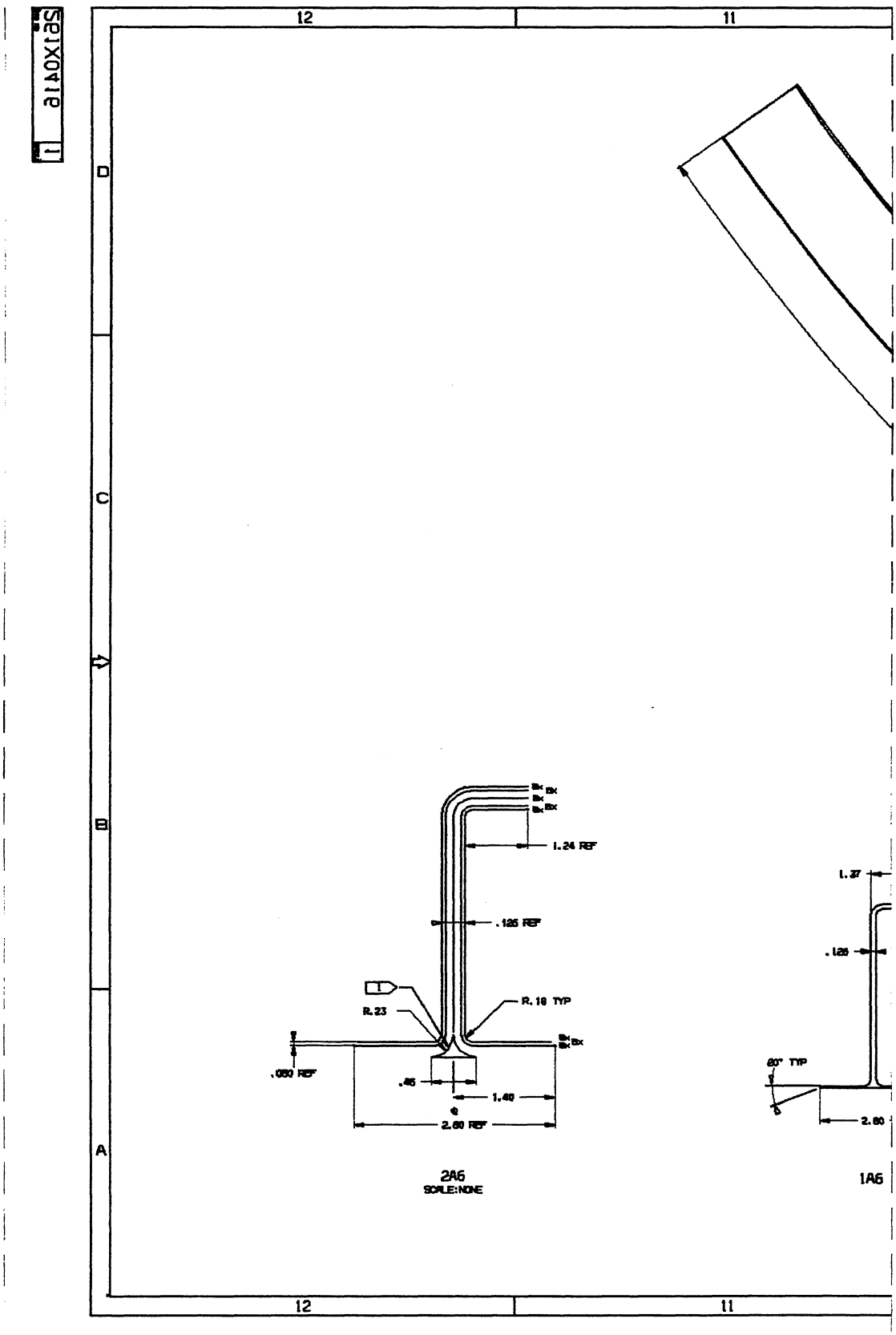
12
11
D
C
B
A
1.24 REF
.125 REF
R.23
R.18 TYP
.080 REF
.46
1.40
2.60 REF
2A6
SCALE:NONE
1.27
.125
60° TYP
2.60
1A6

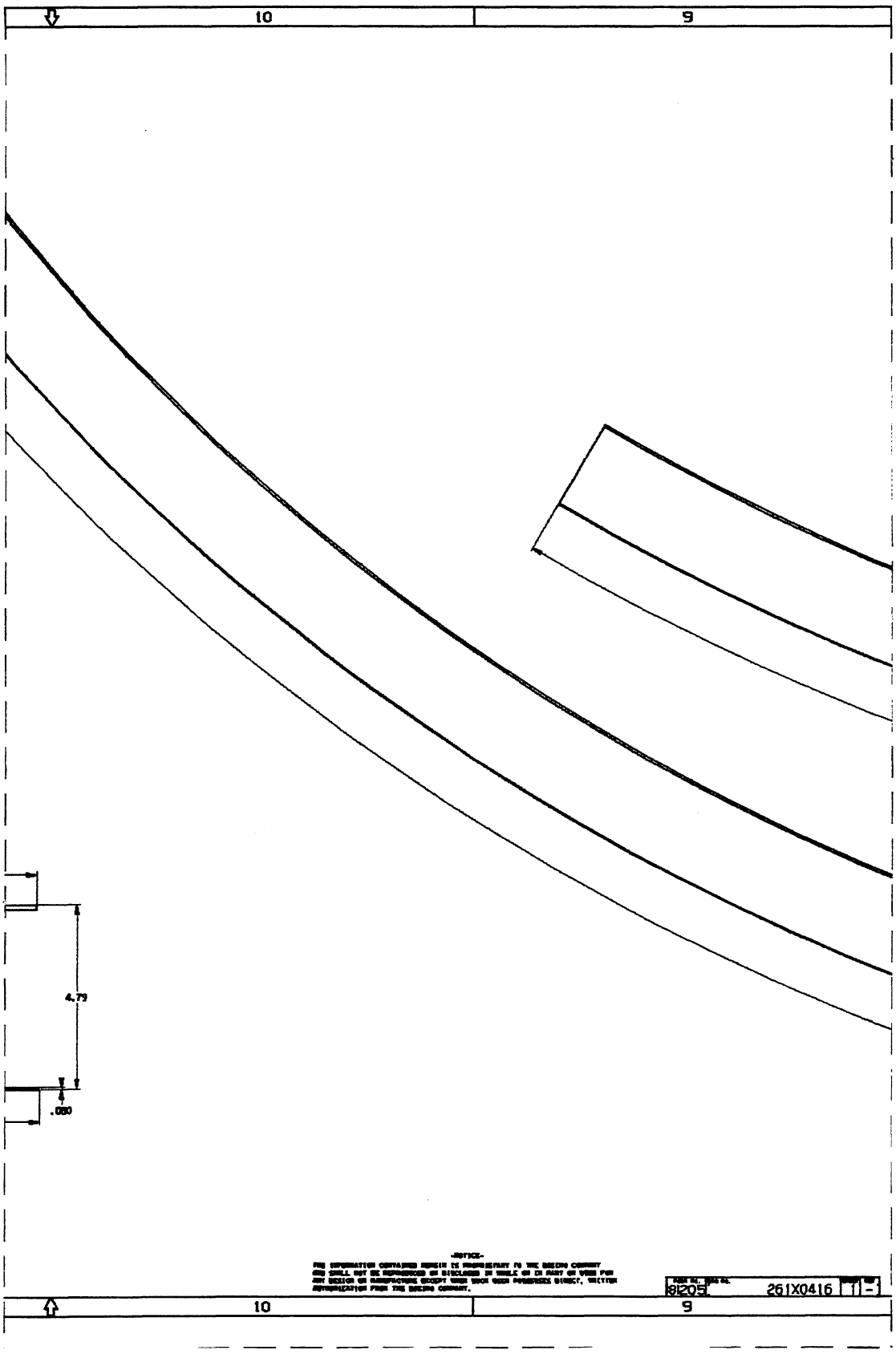
10
9
4.79
.080
10
9
81205
261X0416

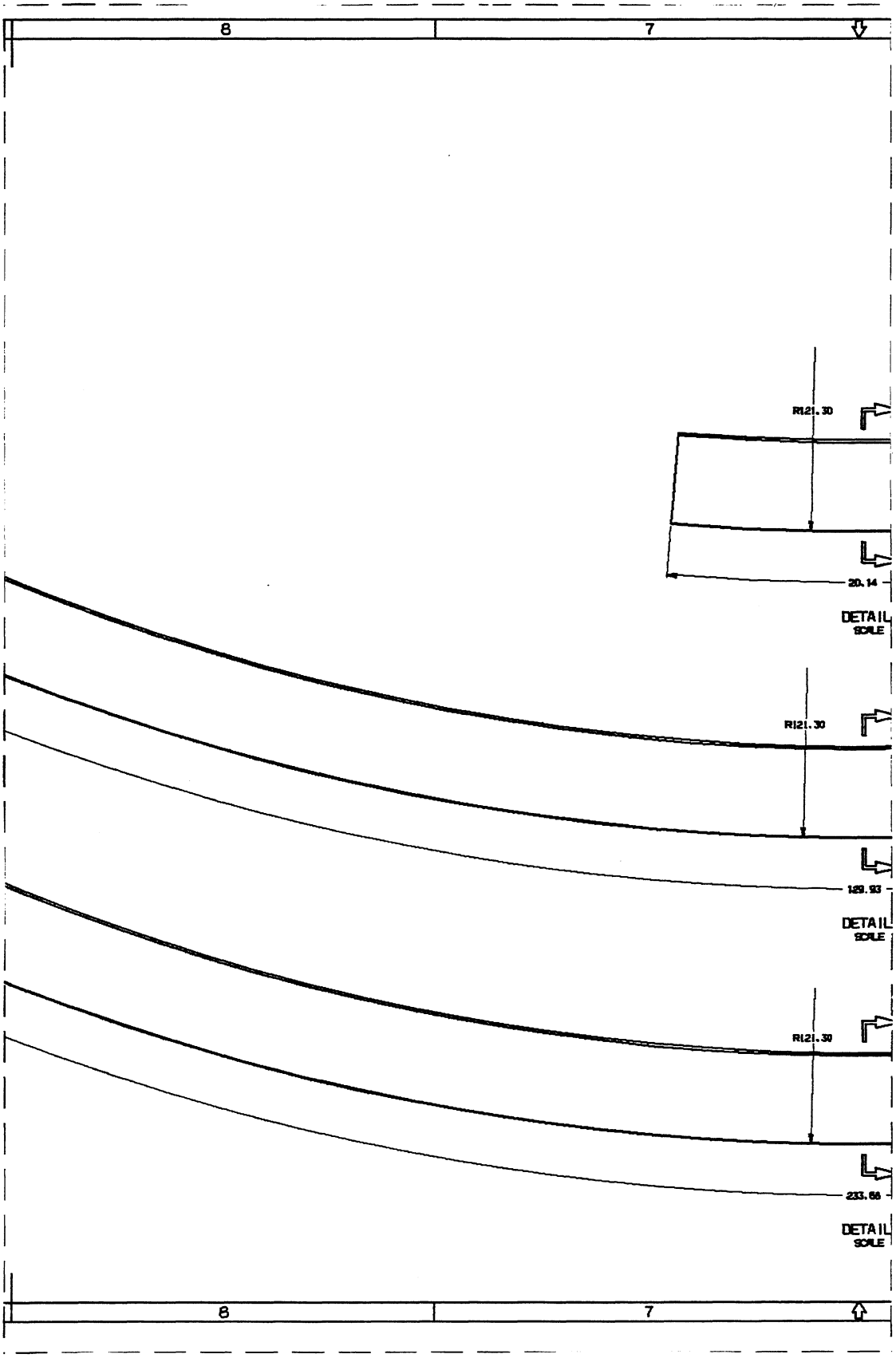
8
7
R121.30
20.14
DETAIL
SCALE
R121.30
189.93
DETAIL
SCALE
R121.30
233.66
DETAIL
SCALE
8
7

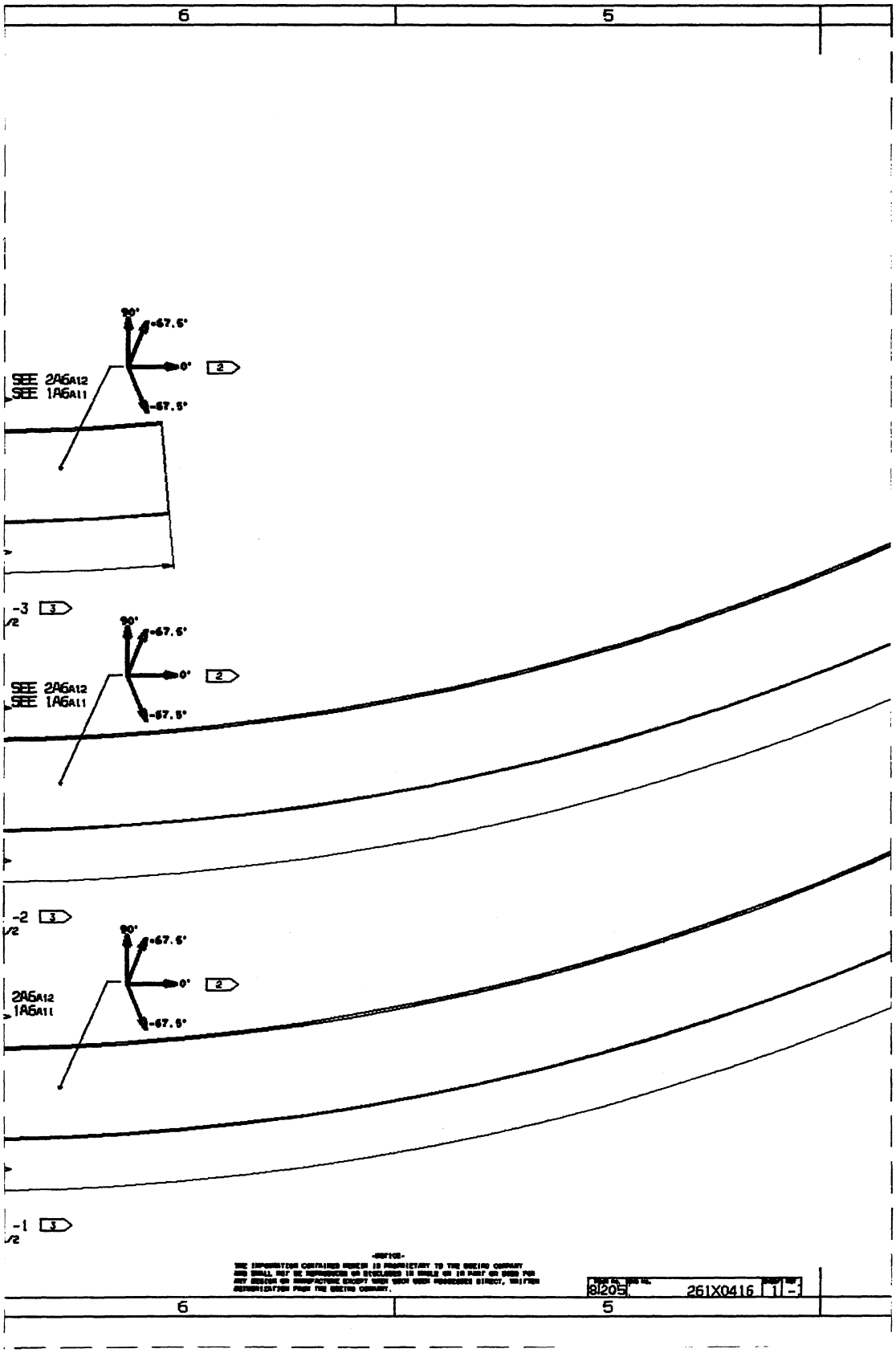
6
5
90°
+67.5°
0°
-67.5°
2
SEE 2A6A12
SEE 1A6A11
-3
3
/2
-2
-1
2A6A12
1A6A11
8205
261X0416
1
-

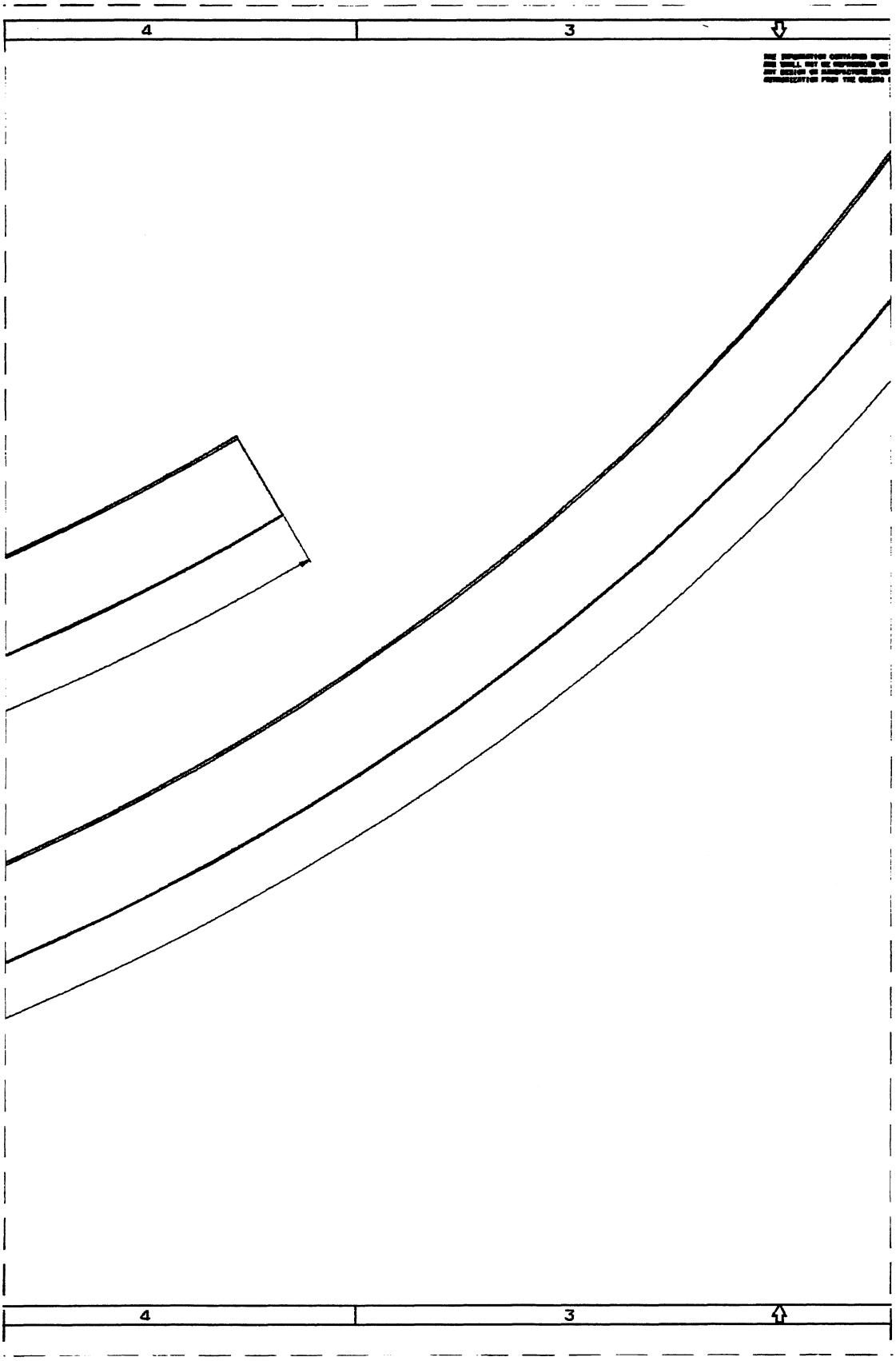
4
3
4
3

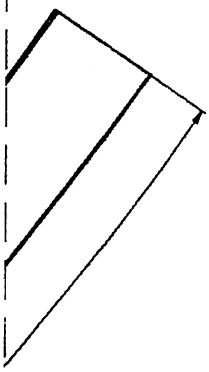

3 BMS 9-8 FIBER (TYPE I, CLASS I, GRADE 12 & 6) EPOXY RESIN COMPATIBLE WITH RTM PROCESSING Ex: SHELL 1895 WITH EPON CURING AGENT V AND ACCELERATOR 537.

2 0° FIBER ORIENTATION IS TANGENT TO THE CIRCUMFERENTIAL CURVATURE OF THE PANEL.

1 FILLER OF BMS 9-345 ADHESIVE MIXED WITH A NOODLE EXTRUDER NOODLE CONFIGURATION TBD.

-18K TOW GROUPS ARE MADE BY COMBINING 12K & 6K TOWS.

-BRAIDED PREFORM ROTATIONS: 8x ARE PLIES OF TRIAXIAL BRAID WITH FIBER ORIENTATIONS +θ, 0, -θ, θ TYP 67.5°, 144 CARRIER BRAIDER, ONE 6K TOW/CARRIER WITH 72 24K TOW GROUPS IN-LAID IN 0° DIRECTION. TYPICAL PER PLY THICKNESS FOR Vf= BSC 0.624".

-TOLERANCE ON PLY EDGE ± .10 EXCEPT AS NOTED.

-SURFACE FINISH ALL MACHINED SURFACES 125 MAX.

-TRIM AND MACHINE GR/EP PARTS TO THE REQUIREMENTS OF BAC 5678.

-BREAK ALL SHARP EDGES AND CORNERS ON GR/EP DETAILS TO A RADIUS OR CHAMFER OF APPROX .01. VISUAL INSPECT ONLY.

-PART MARK PER BAC5307, CODE M.

-FABRICATE PER BAC 5678. (WHERE APPLICABLE)

SEE PL FOR LIST OF MATERIAL, USAGE AND NOTES

TEST ONLY	K.GREEN	4/8/91	BOEING
	C.HANSON	10/15/93	
	D.POLLARD	10/15/93	COMPOSITE SANDWICH SIDE PANEL- FRAME DETAILS (TEST ONLY)
	K.GREEN	10/15/93	
	D.SCHULZ	10/15/93	
W283140	P.SMITH	10/15/93	J 81205 261X0416
B-1948	P.SMITH	10/15/93	
	K.WILSON	10/15/93	SCALE 1/1 SH 1

TOLERANCES: ANGLES ± 2° DECIMALS ± .03

261X0416

D-23

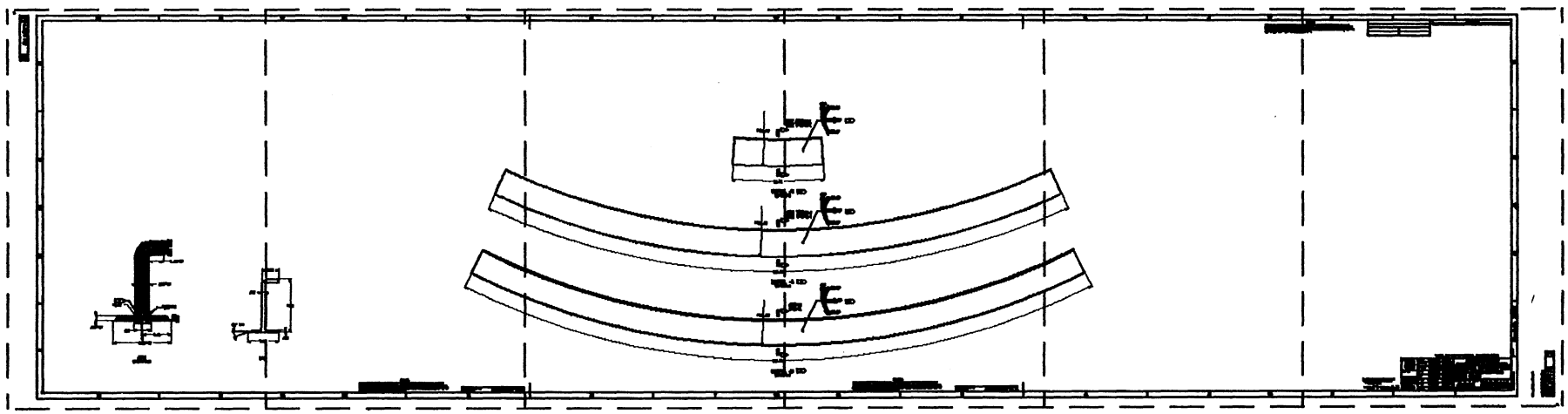

D-24 D-25 D-26 D-27 D-28 D-29

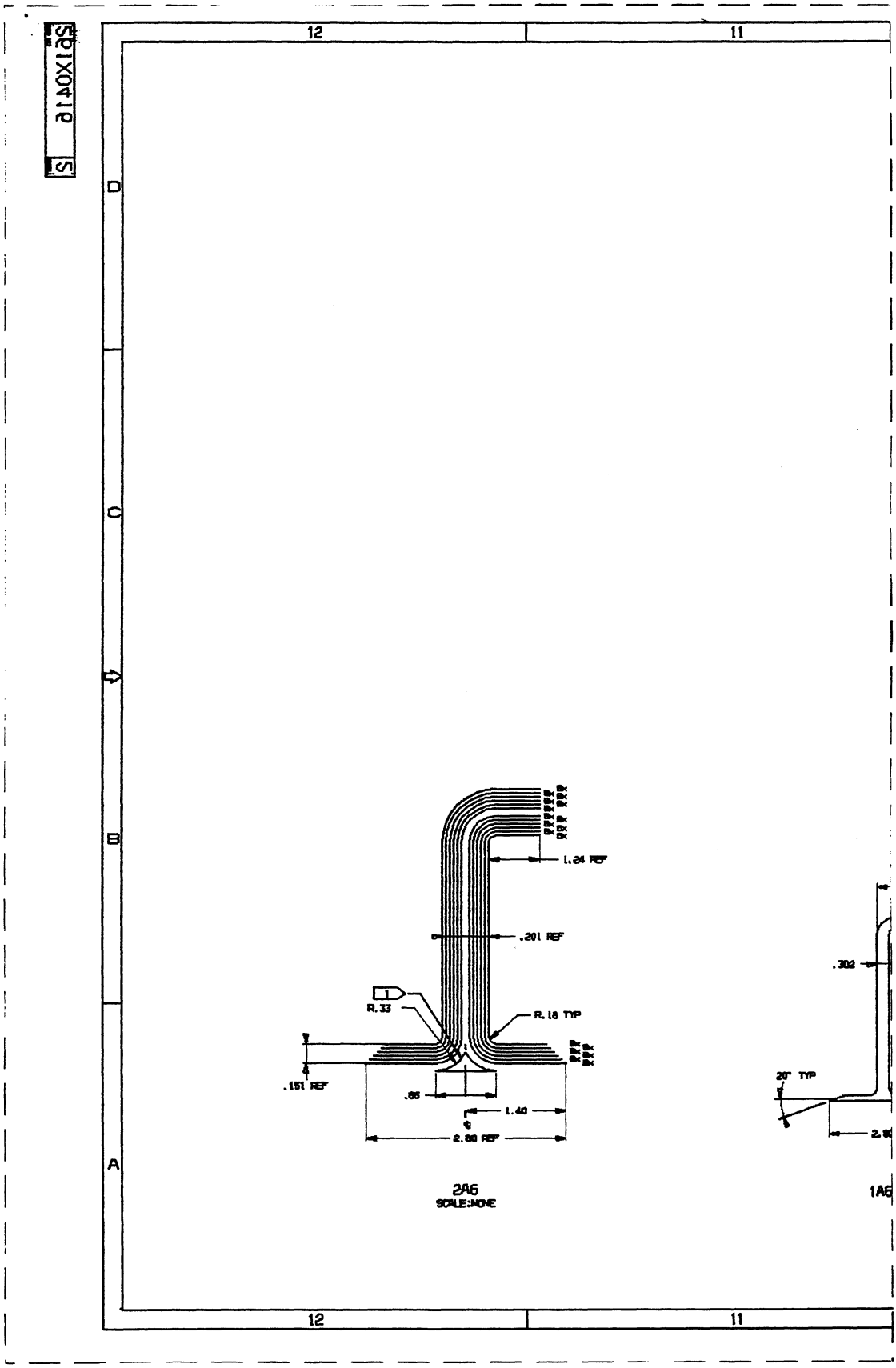
12
11
D
C
B
A
1.24 REF
.201 REF
R.33
R.18 TYP
.151 REF
.65
1.40
2.80 REF
.302
20° TYP
2A6
SCALE:NONE
1A6

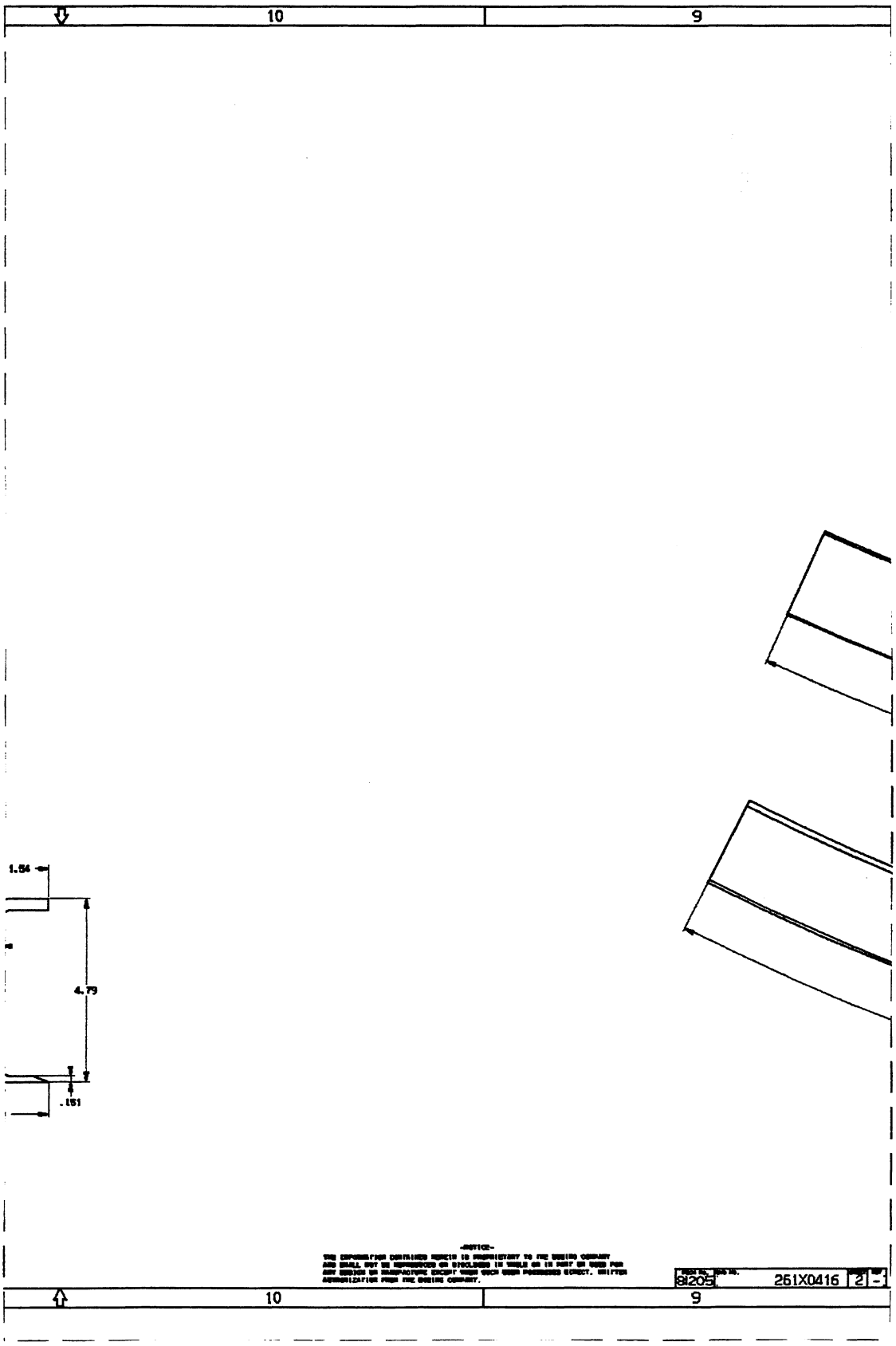
10
9
1.56
4.79
.151
10
9
81205
261X0416
2

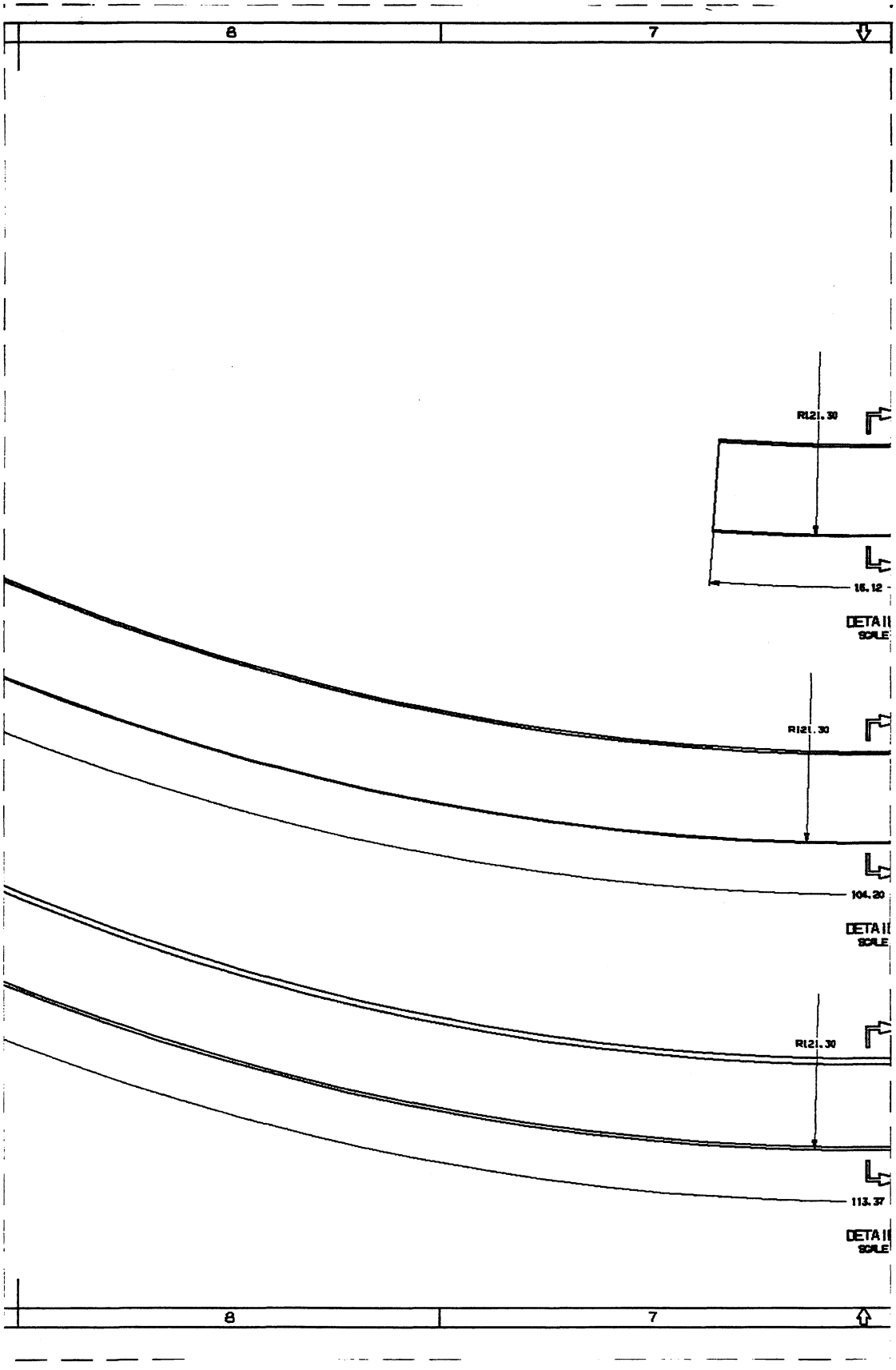
8
7
R121.30
16.12
DETAIL
SCALE
R121.30
104.20
DETAIL
SCALE
R121.30
113.37
DETAIL
SCALE
8
7

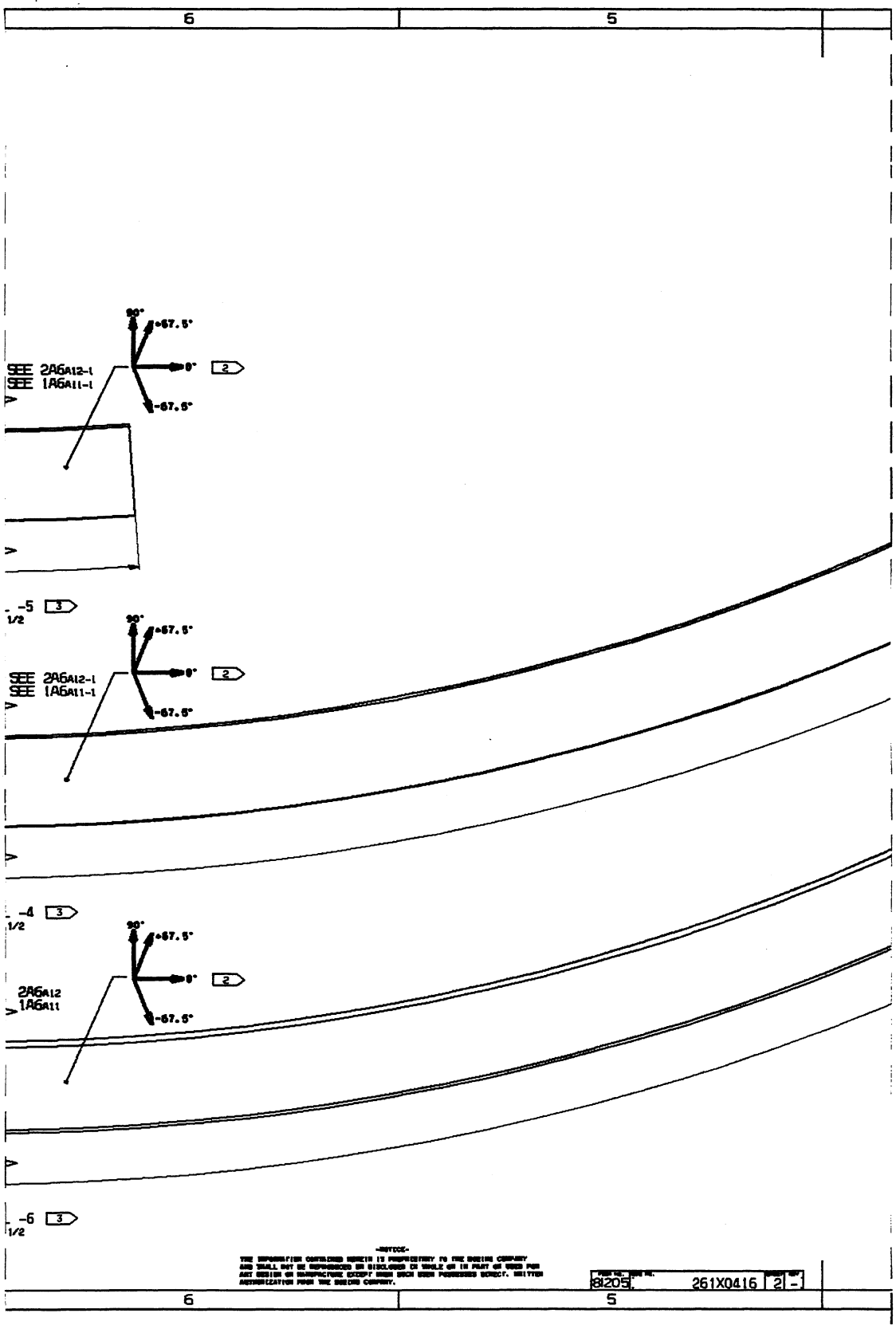
6
5
90°
+67.5°
0°
-67.5°
2
SEE 2A6A12-1
SEE 1A6A11-1
-5
3
1/2
-4
2A6A12
1A6A11
-6
-NOTICE-
8205
261X0416
2
-

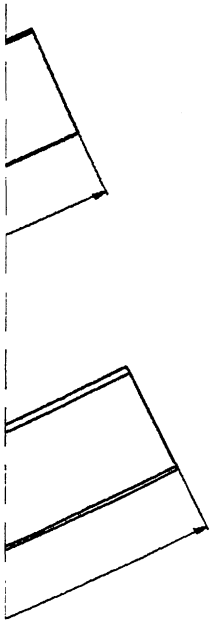

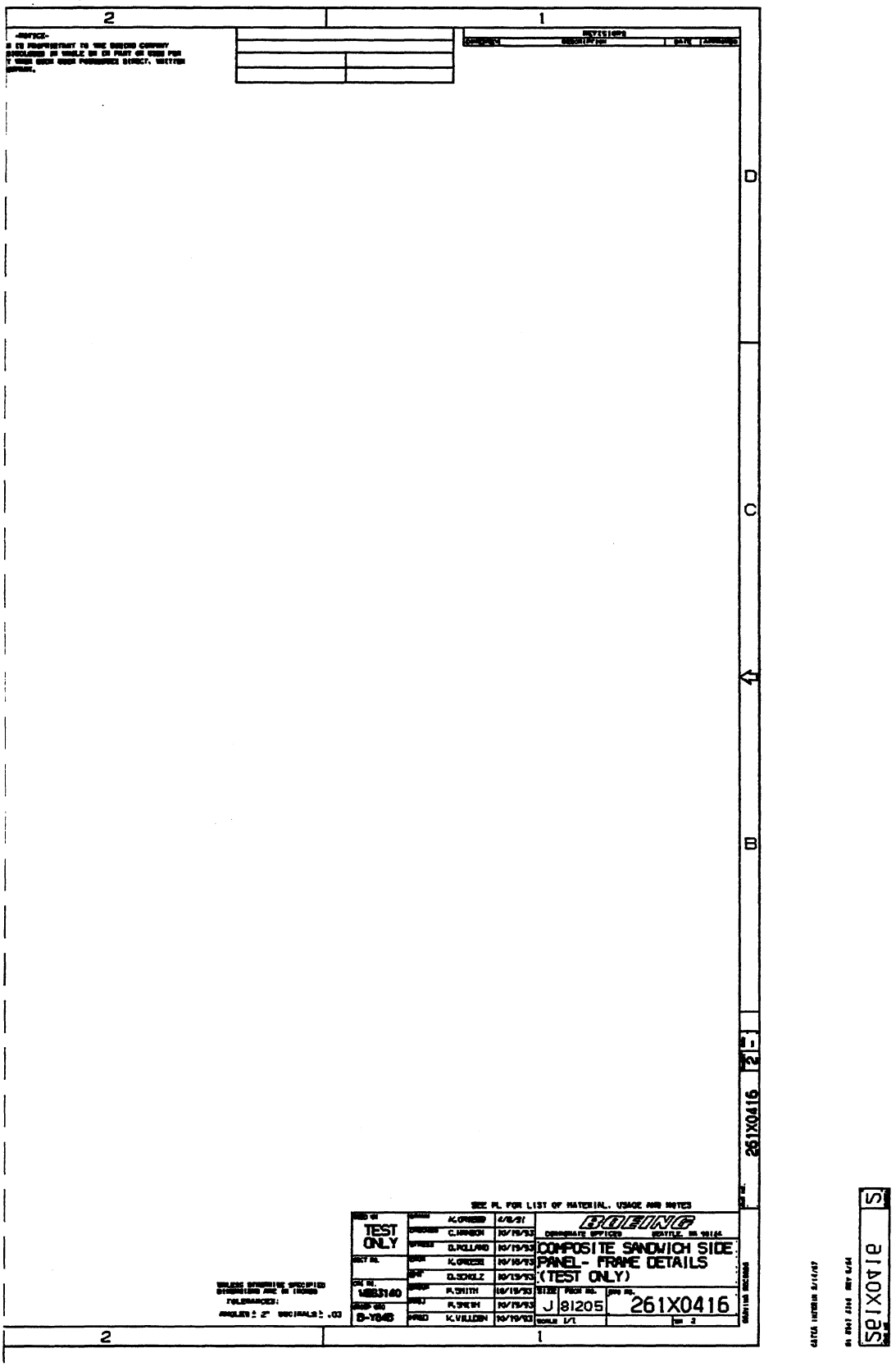

2
1
D
C
B
261X0416
SEE PL FOR LIST OF MATERIAL, USAGE AND NOTES
TEST ONLY
BOEING
COMPOSITE SANDWICH SIDE PANEL- FRAME DETAILS (TEST ONLY)
J
81205
261X0416
B-Y848

D-30

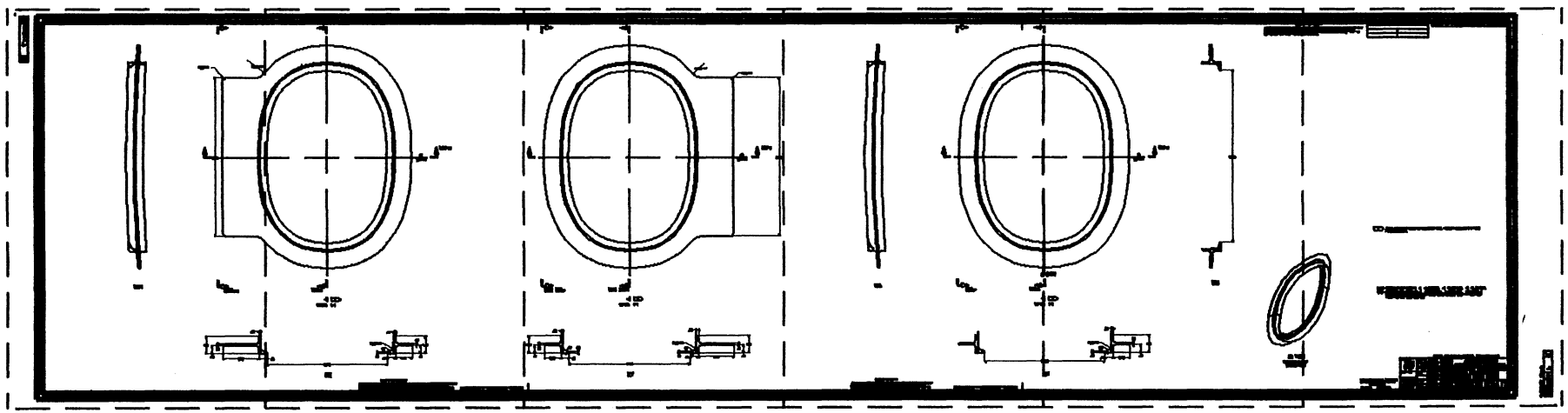

D-31 D-32 D-33 D-34 D-35

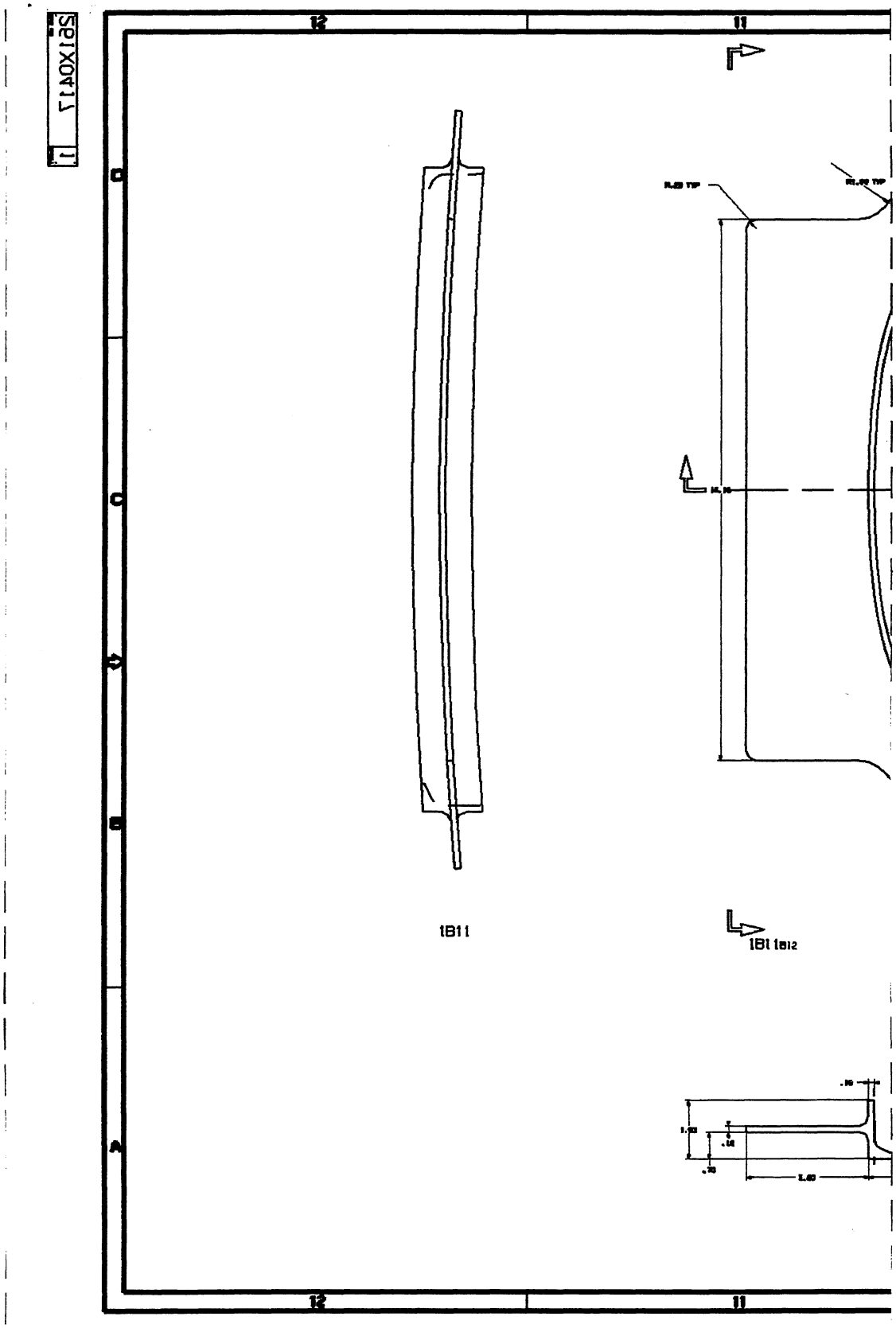
1B11
1B1 1B12

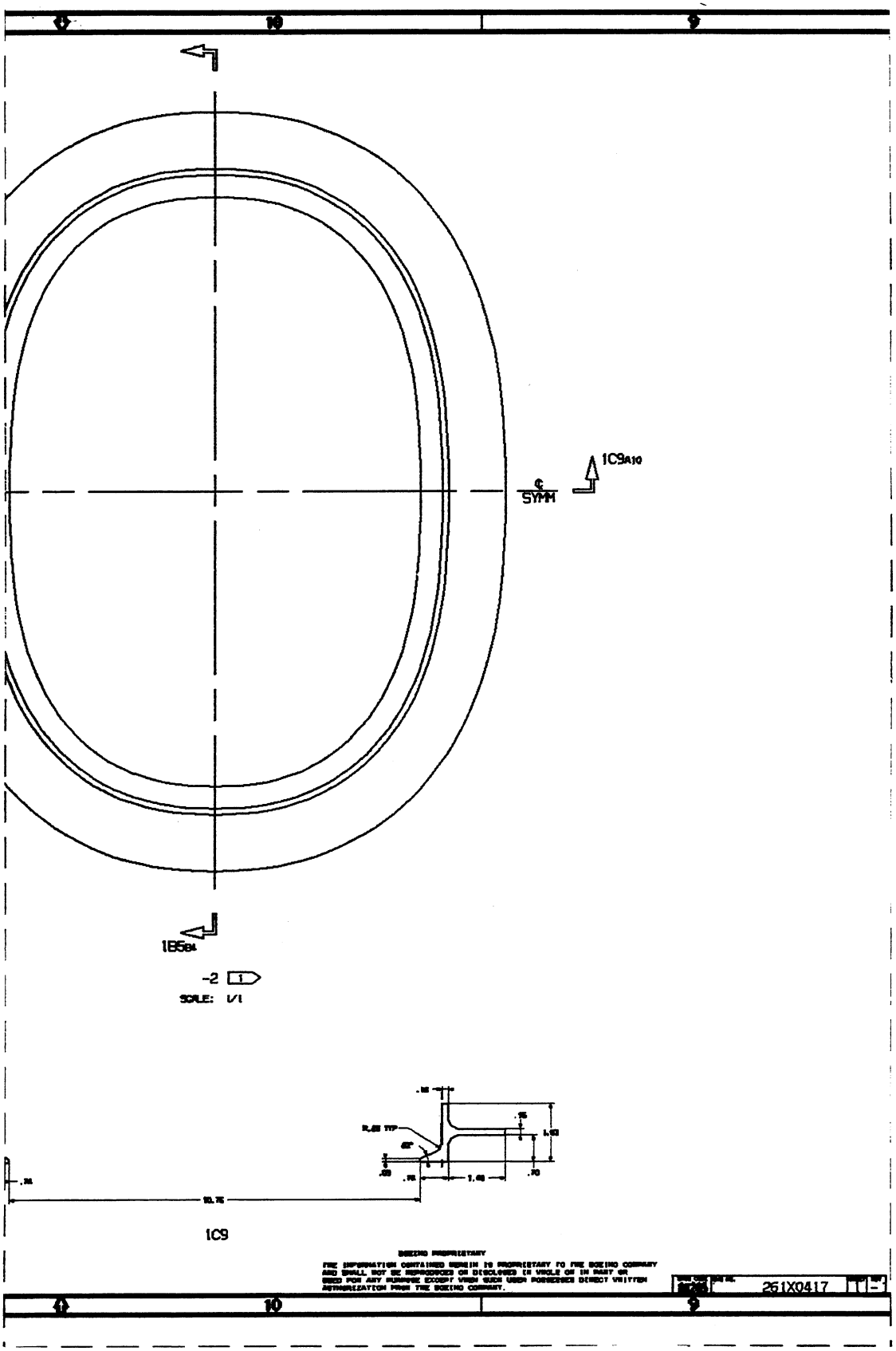
10
9
1C9A10
℄
SYMM
1B5B4
-2
1
SCALE: 1/1
1C9
BOEING PROPRIETARY
261X0417

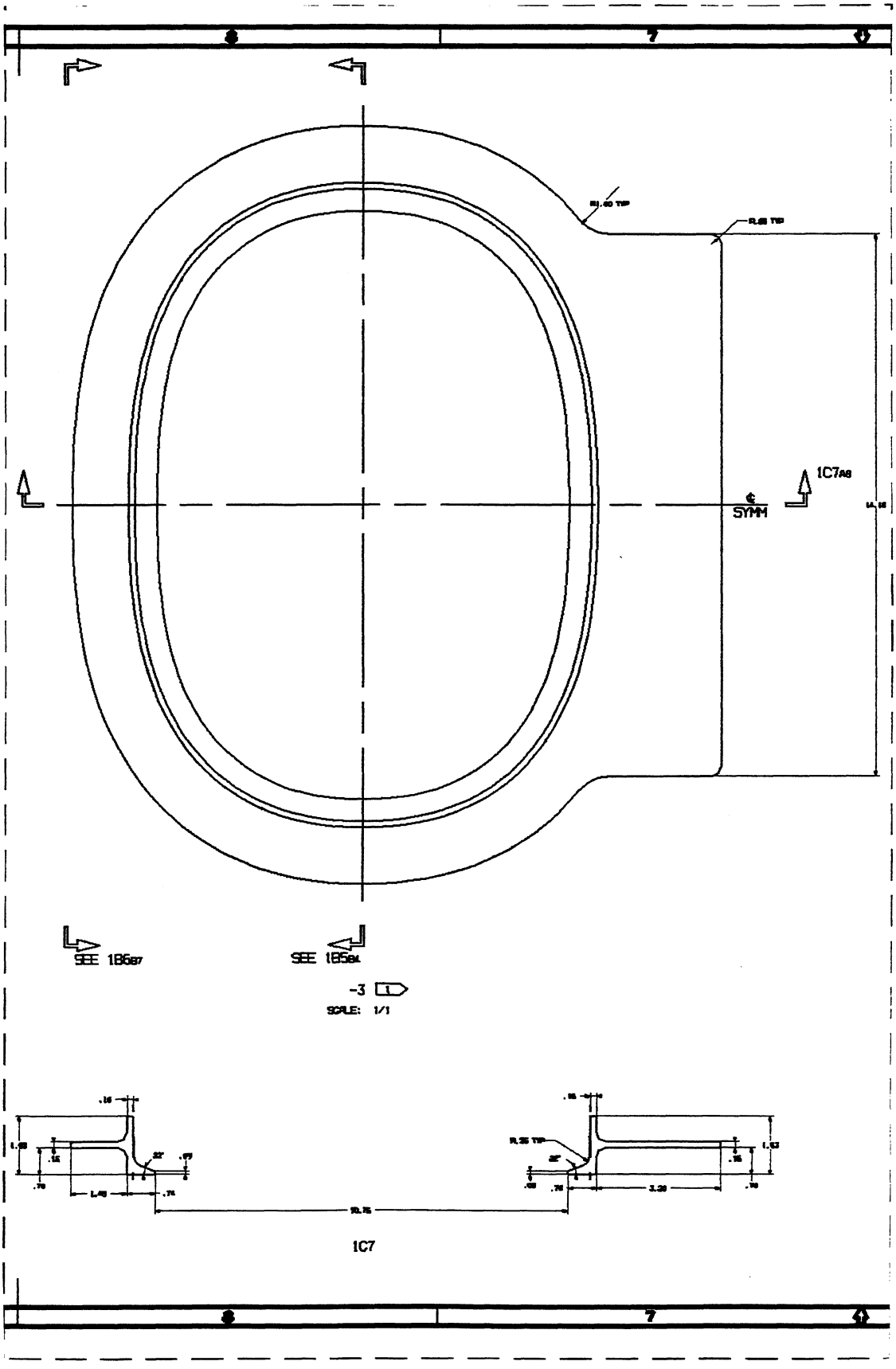
SEE 1B5B7
SEE 1B5B4
-3
SCALE: 1/1
SYMM
1C7A8
1C7

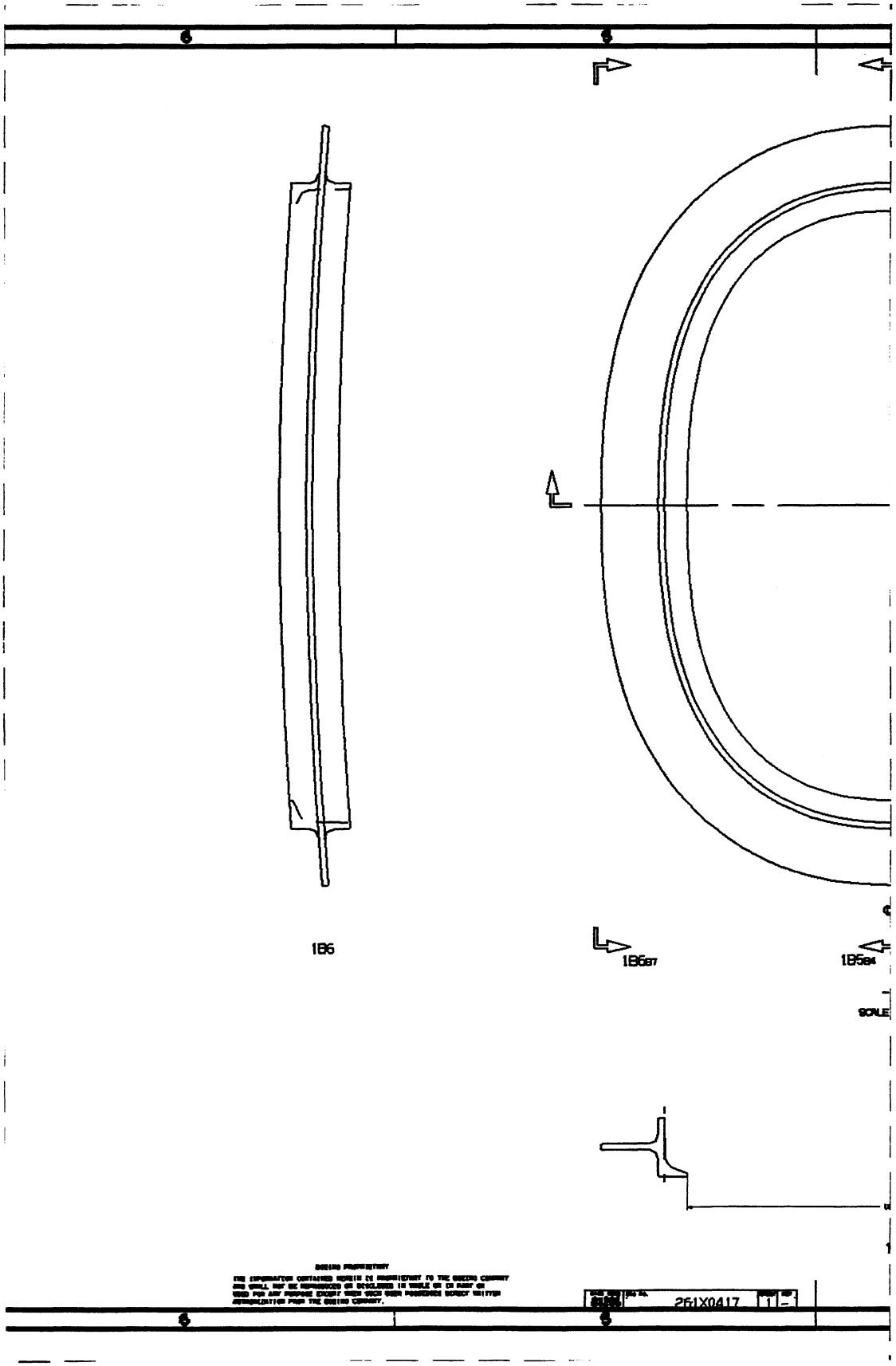
1B6
1B6B7
1B5B4
SCALE
261X0417
1

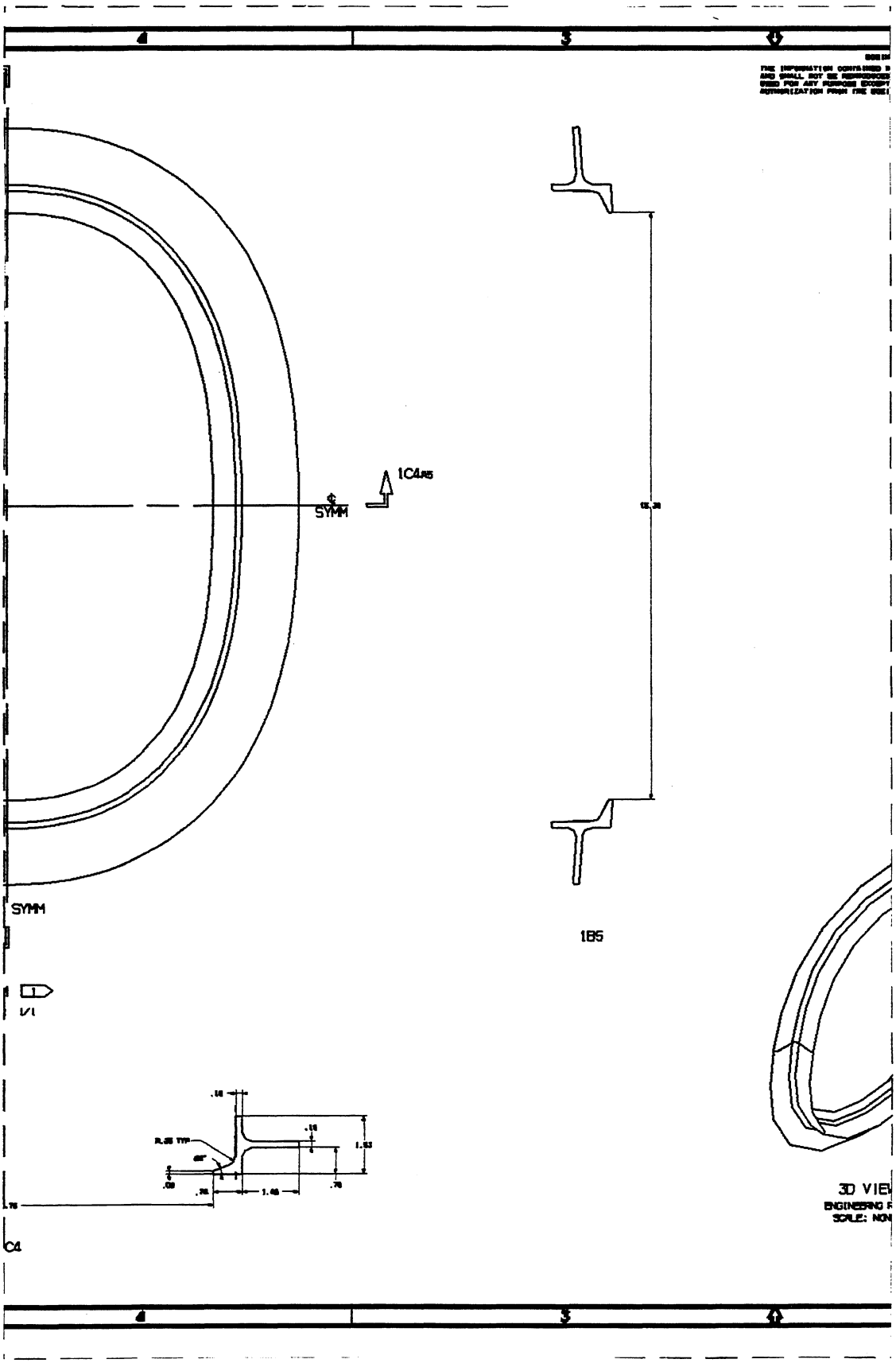

SYMM
SYMM
1C4A5
1B5
3D VIEW
C4

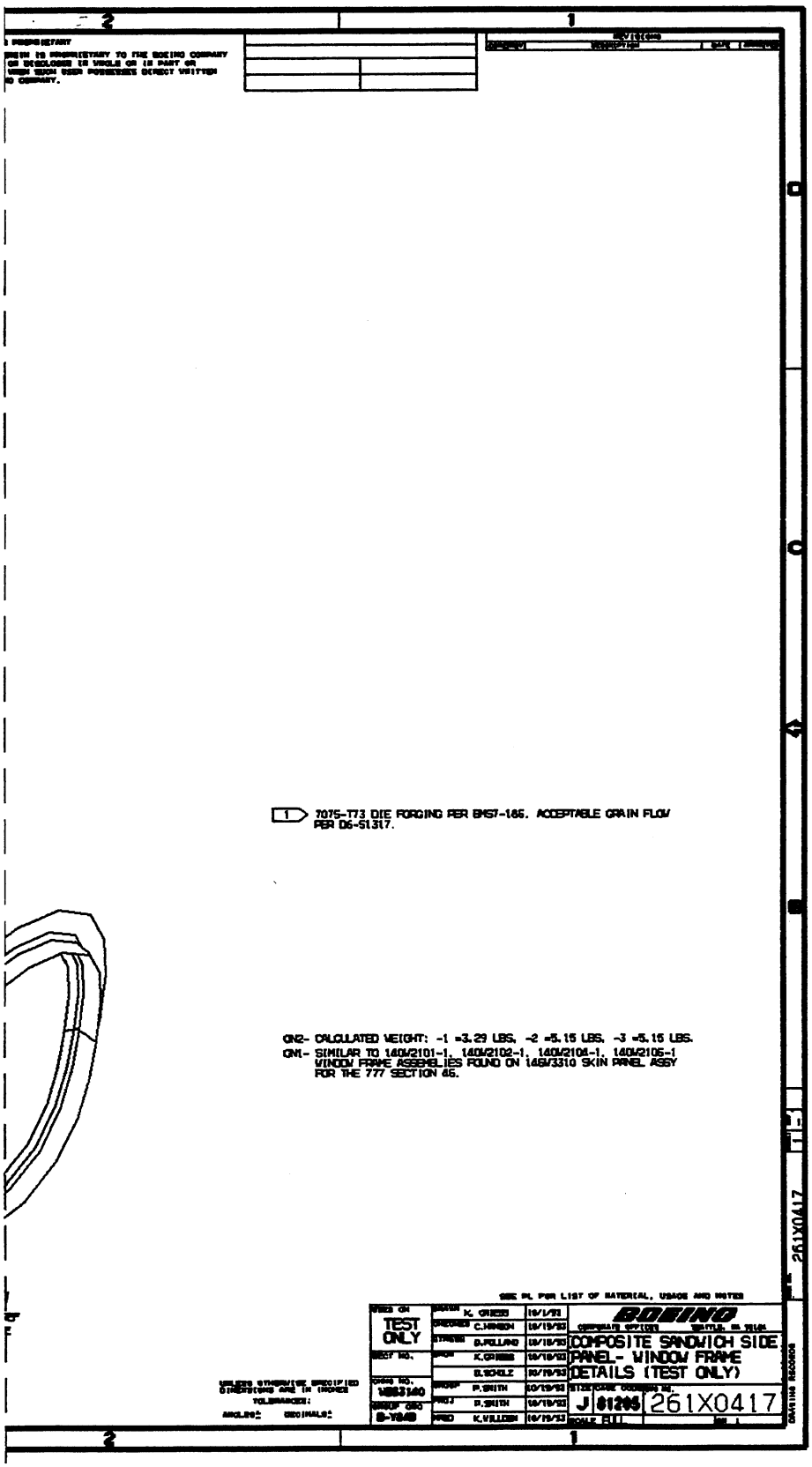
1 7075-T73 DIE FORGING PER BMS7-165. ACCEPTABLE GRAIN FLOW PER D6-51317.
GN2- CALCULATED WEIGHT: -1 =3.29 LBS, -2 =5.15 LBS, -3 =5.15 LBS.
GN1- SIMILAR TO 140V2101-1, 140V2102-1, 140V2104-1, 140V2105-1 WINDOW FRAME ASSEMBLIES FOUND ON 146V3310 SKIN PANEL ASSY FOR THE 777 SECTION 46.
SEE PL FOR LIST OF MATERIAL, USAGE AND NOTES
BOEING
COMPOSITE SANDWICH SIDE PANEL- WINDOW FRAME DETAILS (TEST ONLY)
TEST ONLY
J 81205
261X0417
261X0417

D-37

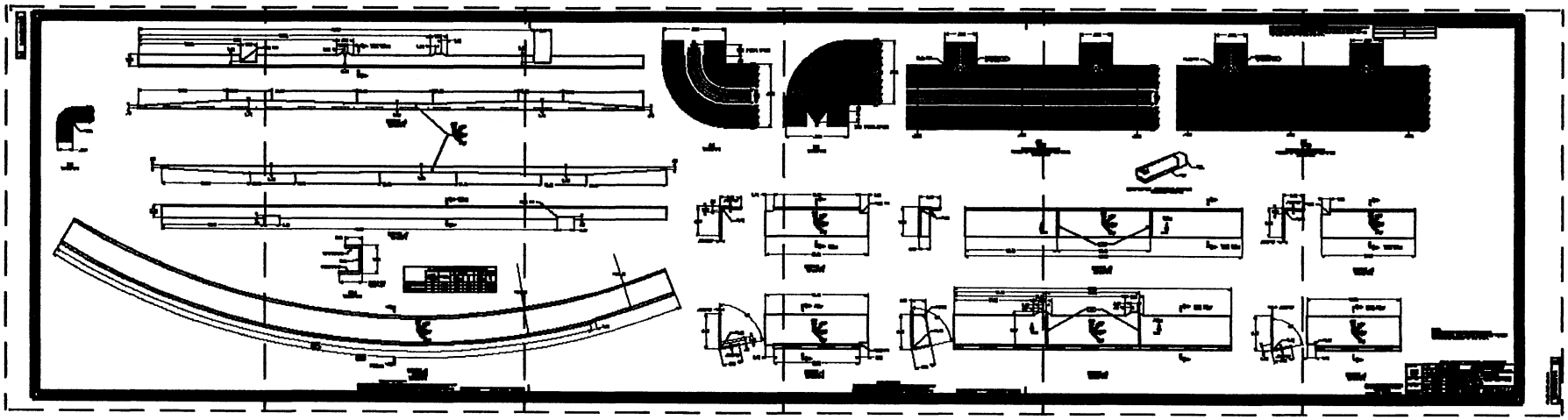

D-38 D-39 D-40 D-41 D-42 D-43

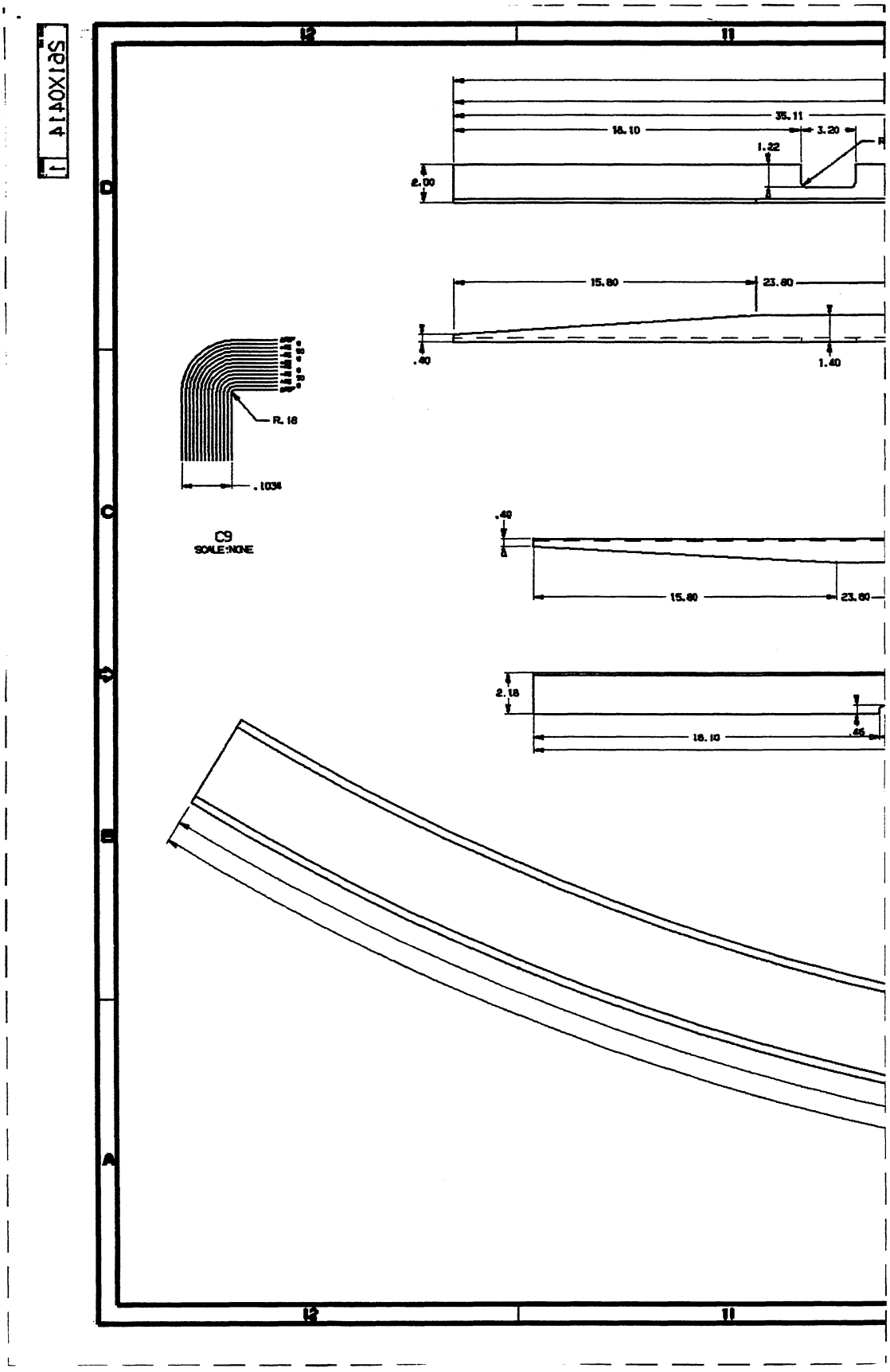
35.11
18.10
3.20
1.22
2.00
15.80
23.80
.40
1.40
R. 18
.1034
C9
SCALE:NONE
.40
15.80
23.80
2.18
18.10
.45

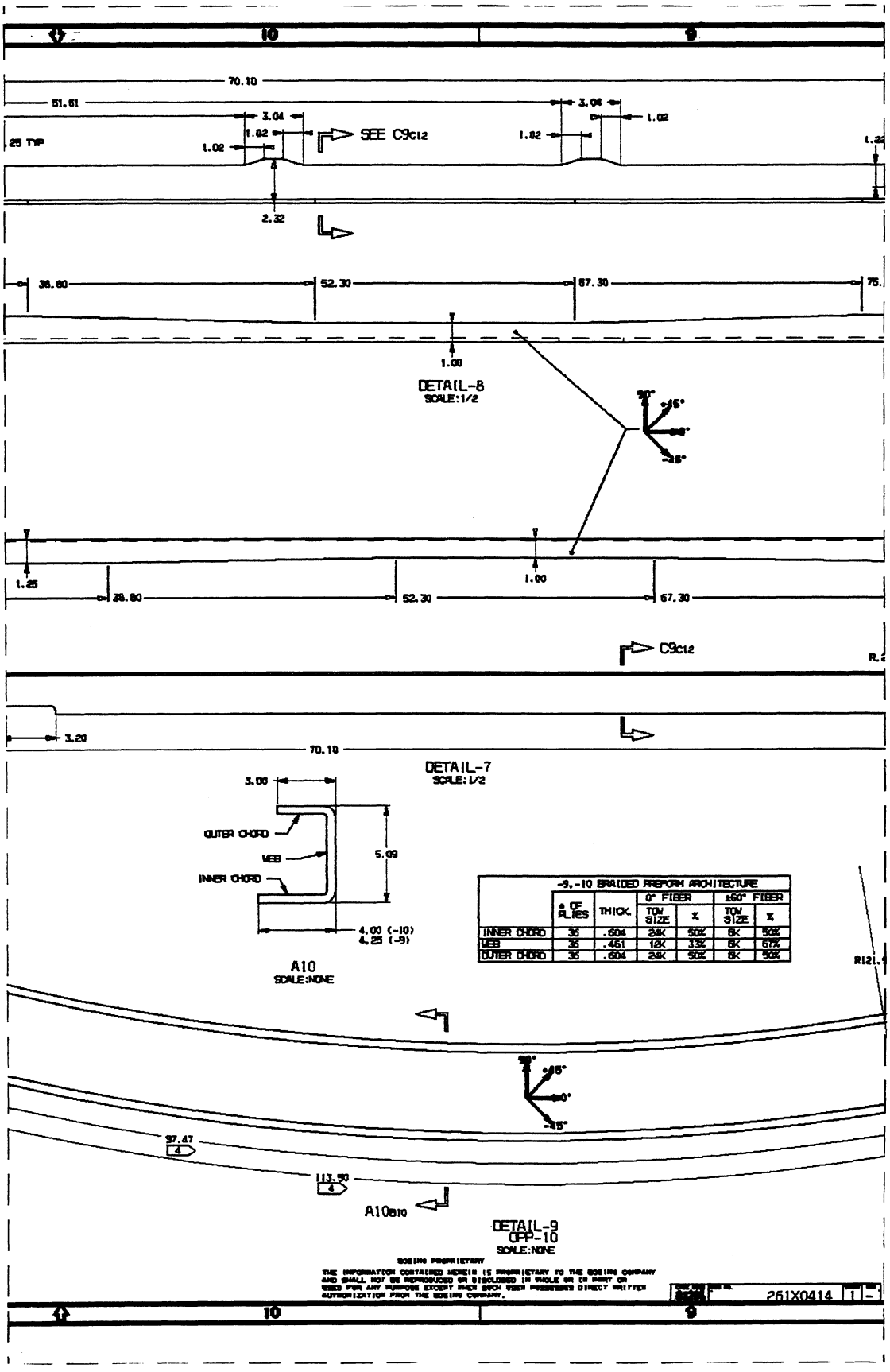
10
9
70.10
51.61
3.04
1.02
.25 TYP
1.02
SEE C9c12
3.04
1.02
1.02
2.32
38.80
52.30
67.30
1.00
DETAIL-8
SCALE:1/2
+45°
0°
-45°
1.25
38.80
52.30
1.00
67.30
C9c12
3.20
70.10
DETAIL-7
SCALE:1/2
3.00
OUTER CHORD
WEB
INNER CHORD
5.09
4.00 (-10)
4.25 (-9)
A10
SCALE:NONE
-9,-10 BRAIDED PREFORM ARCHITECTURE
OF PLIES
THICK.
0° FIBER
±60° FIBER
TOW SIZE
%
TOW SIZE
%
INNER CHORD 36 .604 24K 50% 6K 50%
WEB 36 .461 12K 33% 6K 67%
OUTER CHORD 36 .604 24K 50% 6K 50%
R121.
+45°
0°
-45°
97.47
4
113.50
4
A10B10
DETAIL-9
OPP-10
SCALE:NONE
BOEING PROPRIETARY
THE INFORMATION CONTAINED HEREIN IS PROPRIETARY TO THE BOEING COMPANY AND SHALL NOT BE REPRODUCED OR DISCLOSED IN WHOLE OR IN PART OR USED FOR ANY PURPOSE EXCEPT THOSE SUCH USES PERMITTED DIRECT WRITTEN AUTHORIZATION FROM THE BOEING COMPANY.
261X0414
10
9

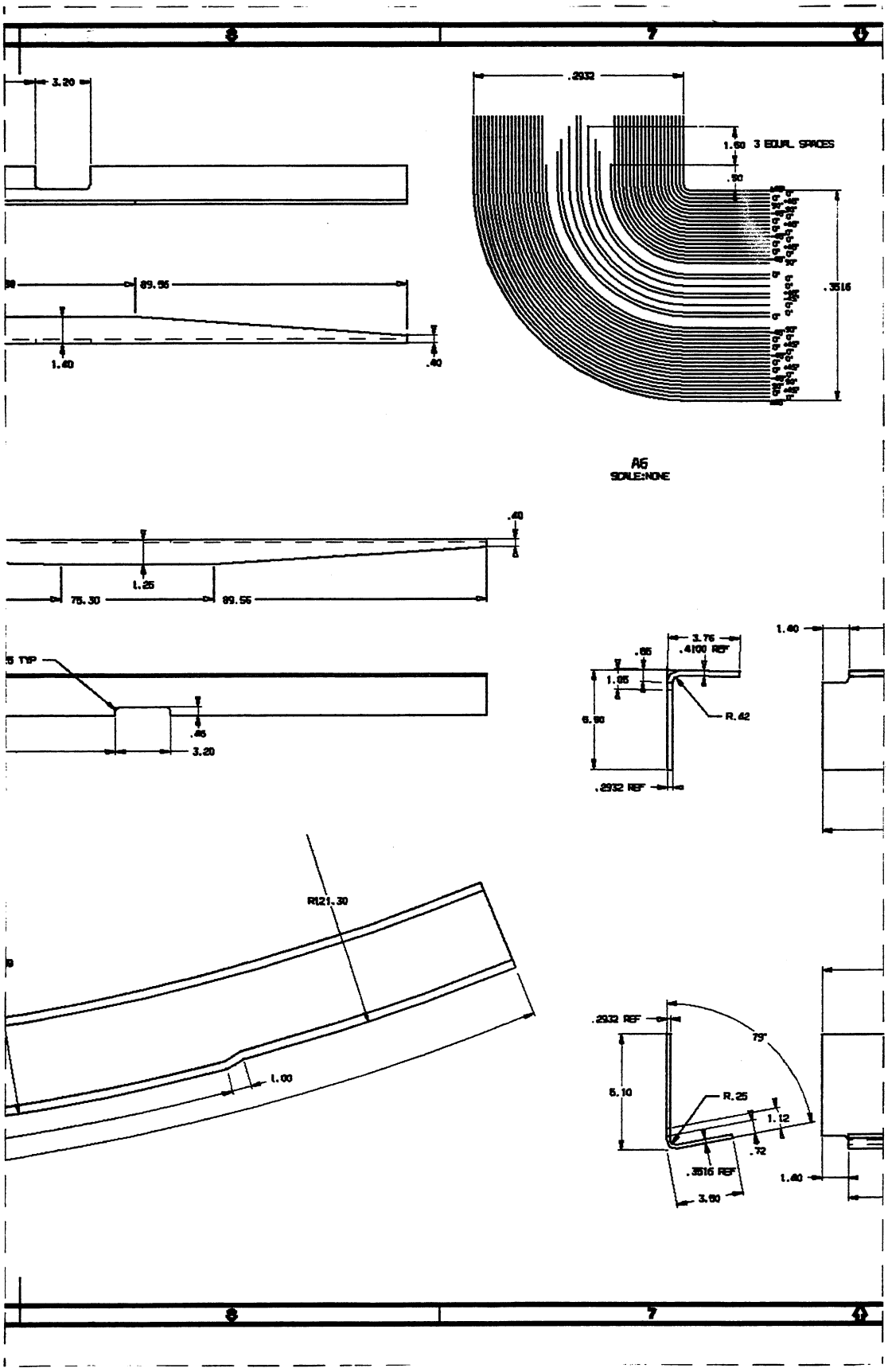
3.20
.2932
1.60 3 EQUAL SPACES
.90
.3516
89.56
1.40
.40
A6
SCALE:NONE
.40
1.25
75.30
89.56
5 TYP
.65
3.20
3.76
.4100 REF
.65
1.05
6.90
R.42
.2932 REF
1.40
R121.30
1.00
.2932 REF
75°
6.10
R.25
1.12
.72
.3516 REF
3.90
1.40

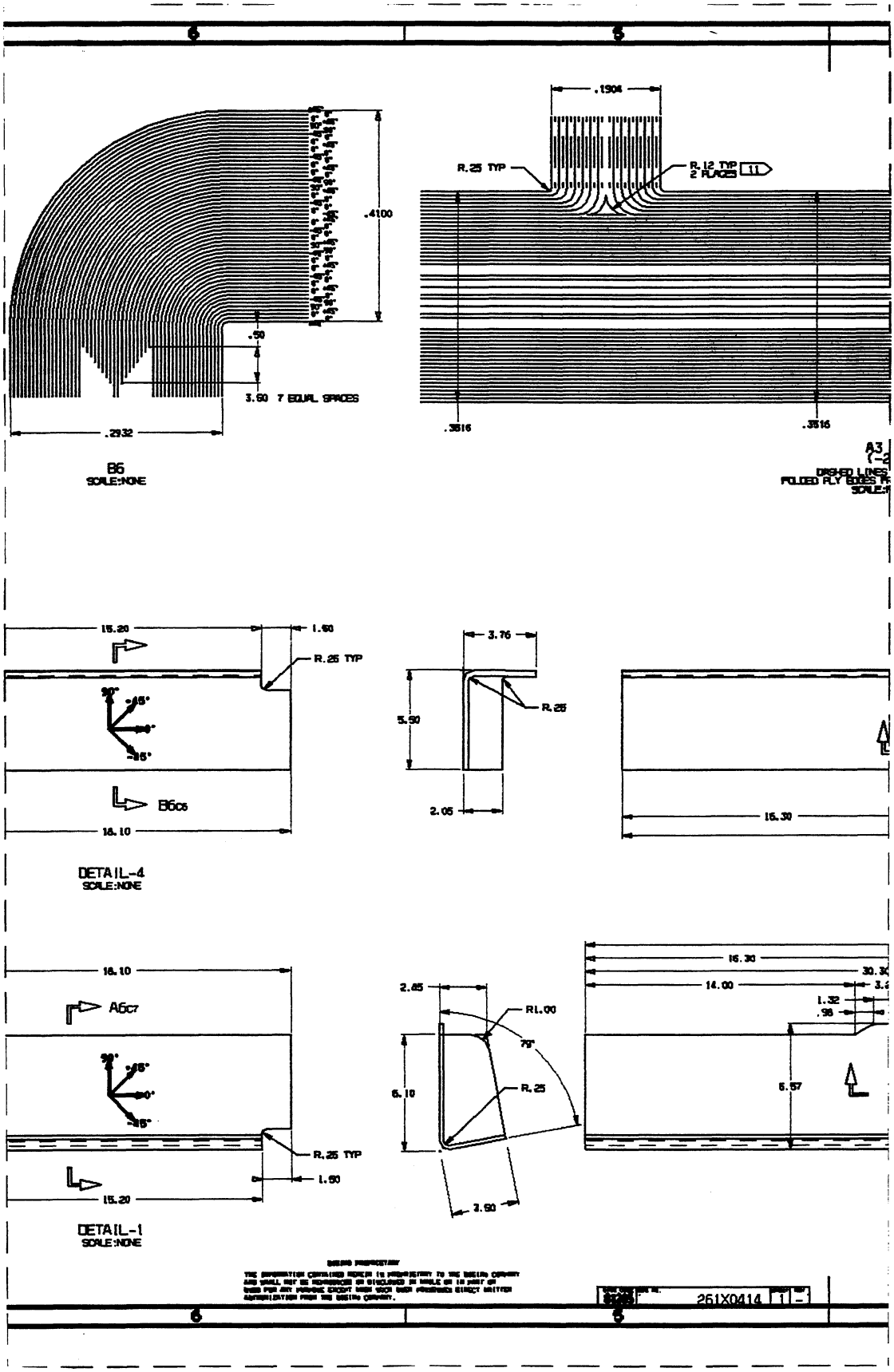
.4100
.50
3.50 7 EQUAL SPACES
.2932
B6
SCALE:NONE
.1904
R.25 TYP
R.12 TYP
2 PLACES
11
.3516
.3516
A3
DASHED LINES
FOLDED FLY SIDES
15.20
1.50
R.25 TYP
B6c6
16.10
DETAIL-4
SCALE:NONE
3.76
R.25
5.50
2.05
15.30
16.10
A6c7
R.25 TYP
1.50
15.20
DETAIL-1
SCALE:NONE
2.65
R1.00
79°
6.10
R.25
3.50
16.30
14.00
1.32
.98
6.57
261X0414

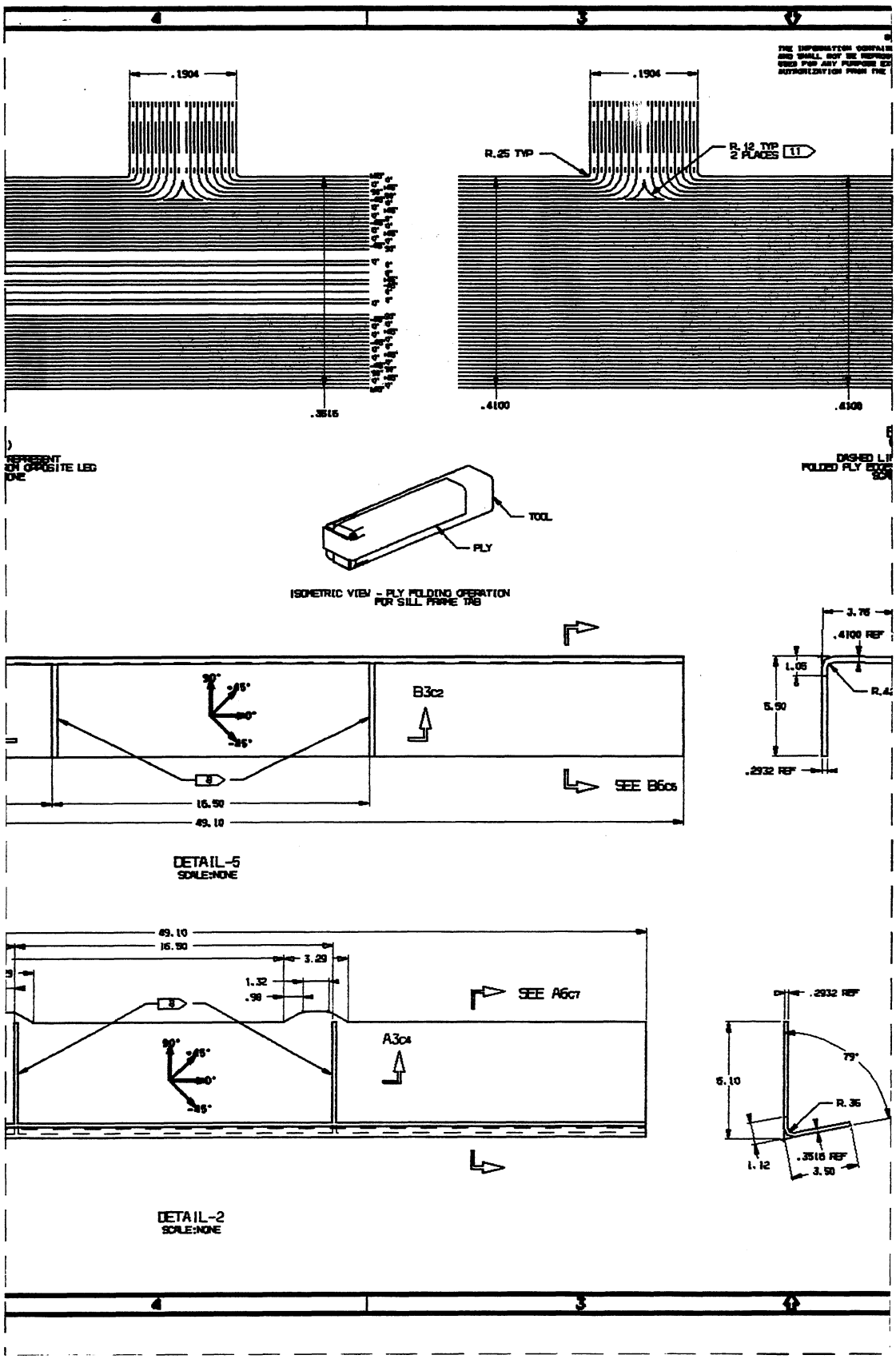
.1904
.3516
.1904
R.25 TYP
R.12 TYP
2 PLACES
11
.4100
.4100
TOOL
PLY
ISOMETRIC VIEW - PLY FOLDING OPERATION
FOR SILL FRAME TAB
B3C2
SEE B6C5
16.50
49.10
3.76
.4100 REF
1.05
5.50
.2932 REF
DETAIL-5
SCALE:NONE
49.10
16.50
3.29
1.32
.98
SEE A6C7
A3C4
.2932 REF
79°
6.10
R.35
.3516 REF
1.12
3.50
DETAIL-2
SCALE:NONE

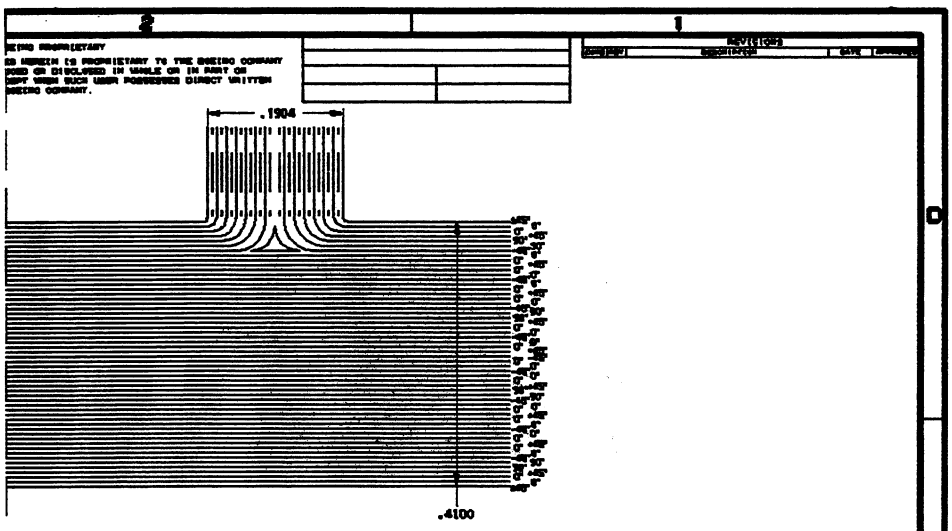

-5)

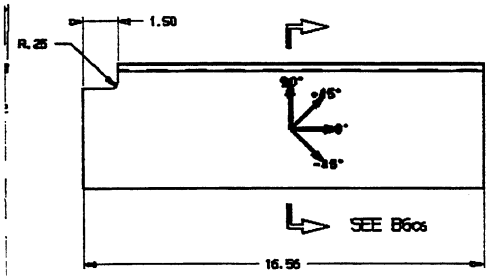

DETAIL-6
SCALE:NONE

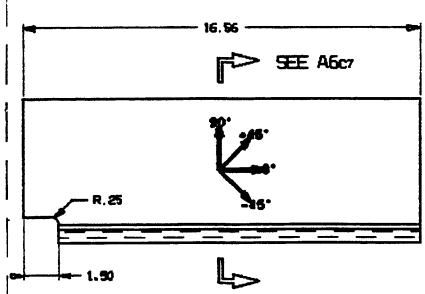

DETAIL-3
SCALE:NONE

NOTE:
SOLIDS IN DATASET ARE FOR PICTORIAL PURPOSE ONLY; THEY DO NOT ACCURATELY REFLECT DIMENSIONS AS SHOWN ON DWG SHEET.

BOEING
COMPOSITE SANDWICH
SIDE PANEL- DOOR DETAILS
(TEST ONLY)
261X0414

D-44

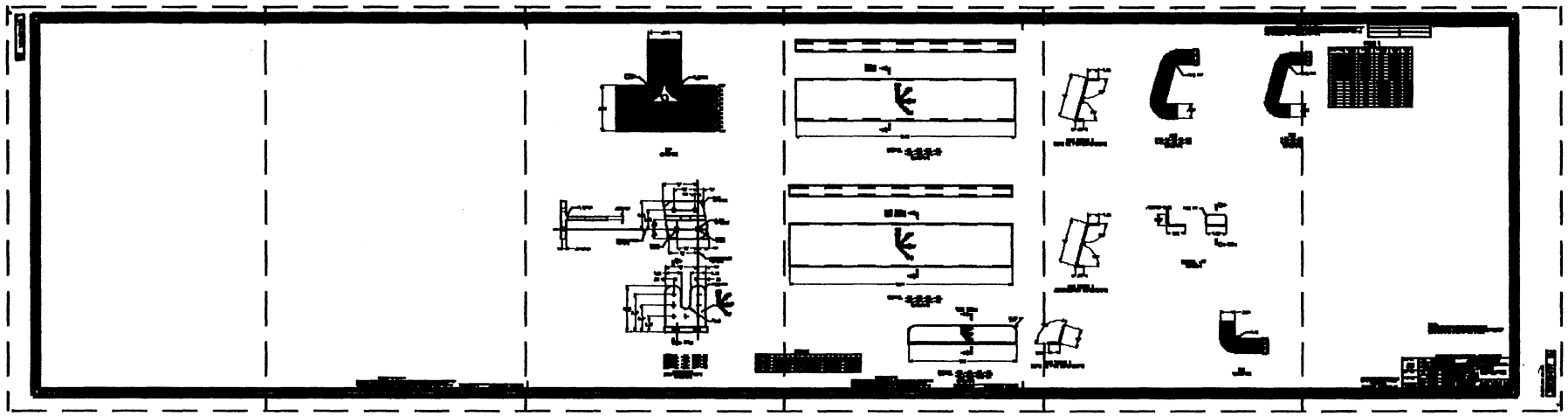

D-45 D-46 D-47 D-48 D-49

BOEING PROPRIETARY
THE INFORMATION CONTAINED HEREIN IS PROPRIETARY TO THE BOEING COMPANY AND SHALL NOT BE REPRODUCED OR DISCLOSED IN WHOLE OR IN PART OR USED FOR ANY PURPOSE EXCEPT WHEN SUCH USES POSSESSED DIRECT WRITTEN AUTHORIZATION FROM THE BOEING COMPANY.

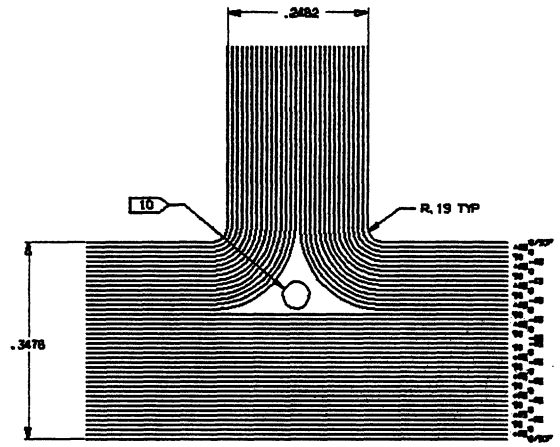

A7
SCALE:NONE

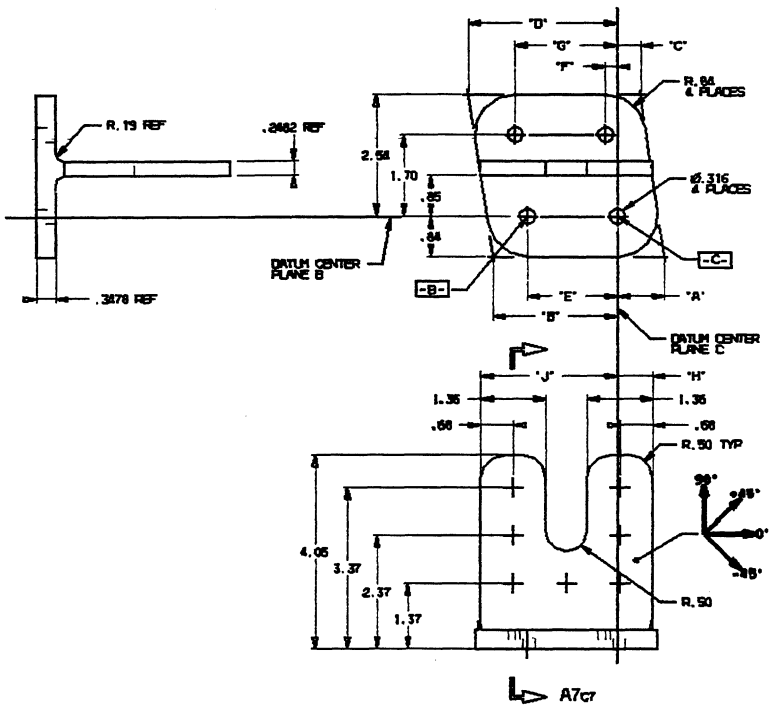

DETAIL -35, OPP-39
DETAIL -36, OPP-40
DETAIL -37, OPP-41
DETAIL -38, OPP-42

SEE TABLE II
ZONE A6 FOR DIMENSIONS
SCALE:NONE

DASH #	A	
-35,-39	.68	2.
-36,-40	.77	2.
-37,-41	.97	2.
-38,-42	1.12	2.

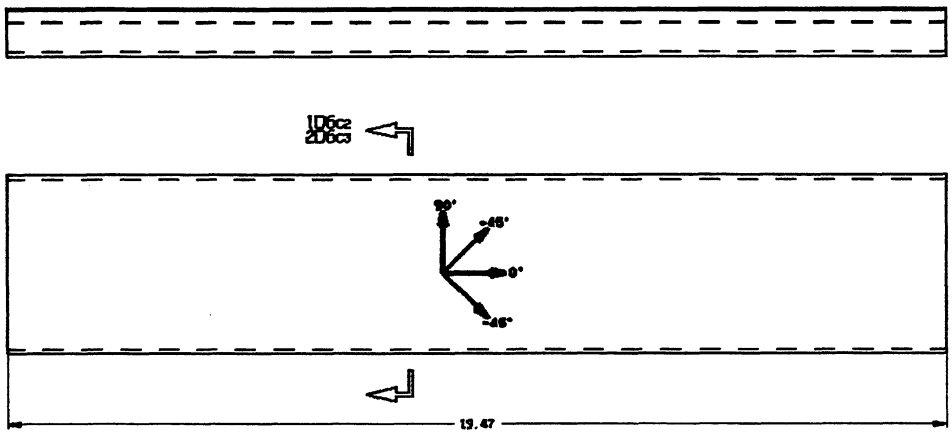

DETAIL -11, -12, -13, -14, -15, -16, -17, -18
SCALE:NONE

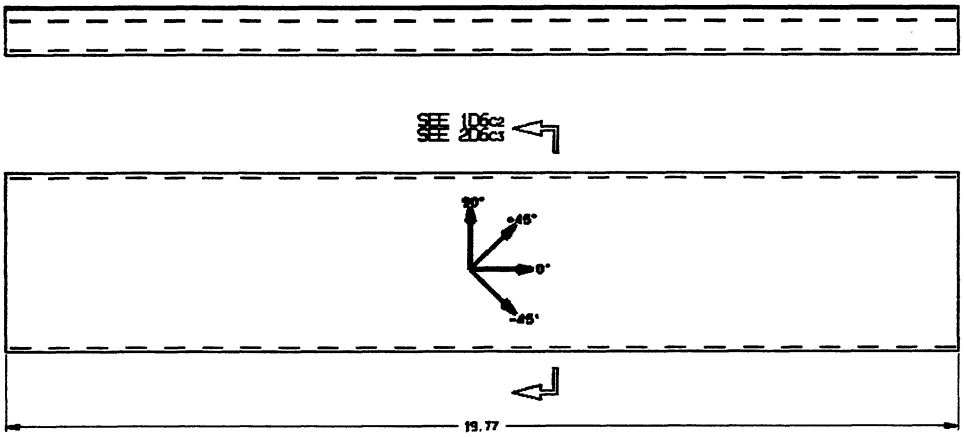

DETAIL -19, -20, -21, -22, -23, -24, -25, -26
SCALE:NONE

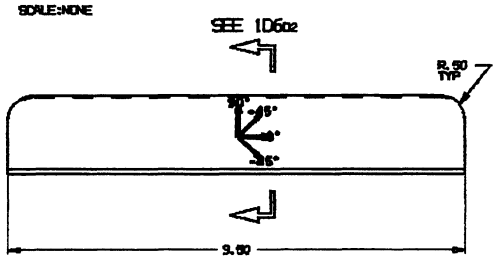

DETAIL -27, -28, -29, -30, -31, -32, -33, -34
SCALE:NONE

TABLE II

	C	D	E	F	G	H	J
02	1.41	2.20	1.91	-.37	1.53	1.04	2.58
73	1.06	2.65	1.67	-.16	1.72	.92	2.64
05	.66	3.10	1.87	.25	2.12	.73	2.84
06	.13	3.56	1.93	.50	2.45	.63	3.07

DESIGN PROPRIETARY
THE INFORMATION CONTAINED HEREIN IS PROPRIETARY TO THE DESIGN COMPANY AND SHALL NOT BE REPRODUCED OR DISCLOSED IN WHOLE OR IN PART OR USED FOR ANY PURPOSE EXCEPT THOSE FOR WHICH PERMISSION IS GIVEN IN WRITING BY THE DESIGN COMPANY.

261X0414 2 -1

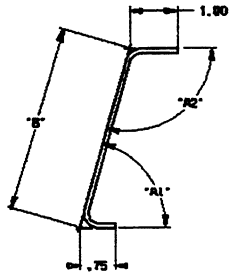

SEE TABLE I
ZONE D2 FOR DIMENSIONS

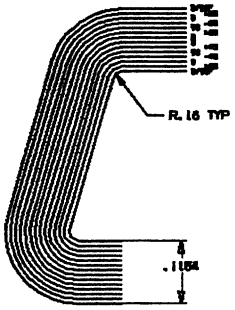

2D6
(-12,-13,-14,-16,-17)
(-20,-21,-22,-23,-25)
SCALE:NONE

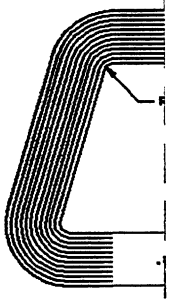

1D6
(-11,-18,-18
(-19,-24,-26
SCALE:NONE

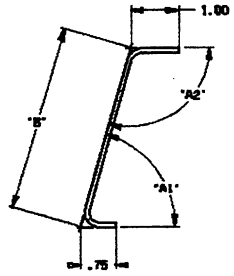

SEE TABLE I
ZONE D2 FOR DIMENSIONS

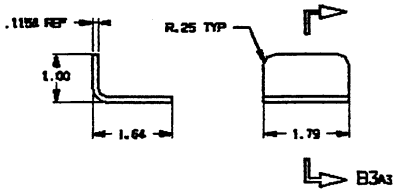

DETAIL -47
SCALE: 1/1

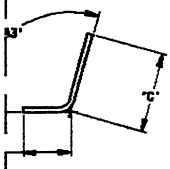

SEE TABLE I
D2 FOR DIMENSIONS

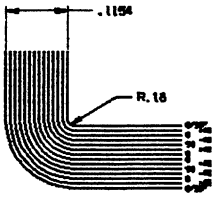

B3
SCALE:NONE

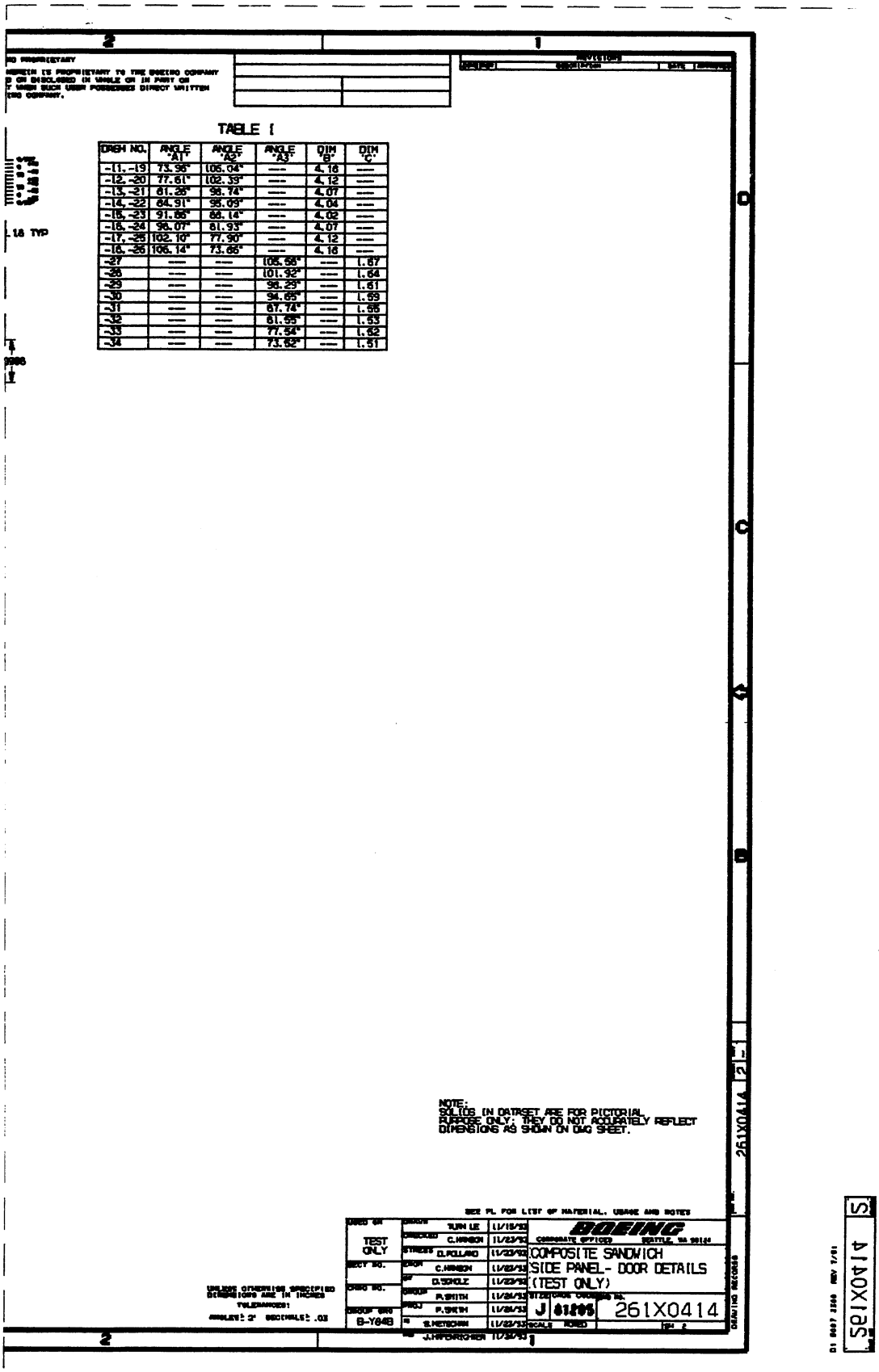

NO PROPRIETARY
HEREIN IS PROPRIETARY TO THE BOEING COMPANY
D OR DISCLOSED IN WHOLE OR IN PART OR
T WHEN SUCH USER POSSESSES DIRECT WRITTEN
ING COMPANY.

REVISIONS

TABLE I

DASH NO.	ANGLE "A1"	ANGLE "A2"	ANGLE "A3"	DIM "B"	DIM "C"
-11, -19	73.96°	106.04°	---	4.16	---
-12, -20	77.61°	102.39°	---	4.12	---
-13, -21	81.26°	98.74°	---	4.07	---
-14, -22	84.91°	95.09°	---	4.04	---
-15, -23	91.86°	88.14°	---	4.02	---
-16, -24	98.07°	81.93°	---	4.07	---
-17, -25	102.10°	77.90°	---	4.12	---
-18, -26	106.14°	73.86°	---	4.16	---
-27	---	---	105.58°	---	1.67
-28	---	---	101.92°	---	1.64
-29	---	---	98.29°	---	1.61
-30	---	---	94.65°	---	1.59
-31	---	---	87.74°	---	1.55
-32	---	---	81.55°	---	1.53
-33	---	---	77.54°	---	1.52
-34	---	---	73.52°	---	1.51

NOTE:
SOLIDS IN DATASET ARE FOR PICTORIAL PURPOSE ONLY; THEY DO NOT ACCURATELY REFLECT DIMENSIONS AS SHOWN ON DWG SHEET.

SEE PL FOR LIST OF MATERIAL, USAGE AND NOTES

UNLESS OTHERWISE SPECIFIED DIMENSIONS ARE IN INCHES
TOLERANCES:
ANGLES ± 2° DECIMALS ± .03

USED ON: TEST ONLY	DRAWN	TUNN LE	11/15/93
	CHECKED	C.HANSON	11/23/93
	STRESS	D.FOLLARD	11/23/93
SECT NO.	ENGR	C.HANSON	11/23/93
	QA	D.SCHOLZ	11/23/93
CHKD NO.	GROUP	P.SMITH	11/24/93
	PROJ	P.SMITH	11/24/93
GROUP ORG: B-Y84B	IS	S.METSCHAN	11/23/93
	REF	J.HAFENRICHTER	11/24/93

BOEING
CORPORATE OFFICES SEATTLE, WA 98124

COMPOSITE SANDWICH
SIDE PANEL- DOOR DETAILS
(TEST ONLY)

SIZE J | CODE IDENT NO. 81205 | DWG NO. 261X0414
SCALE NONE | SH 2

DRAWING RECORDS

261X0414 2

D1 8607 3500 REV 7/91

261X0414 S

D-50

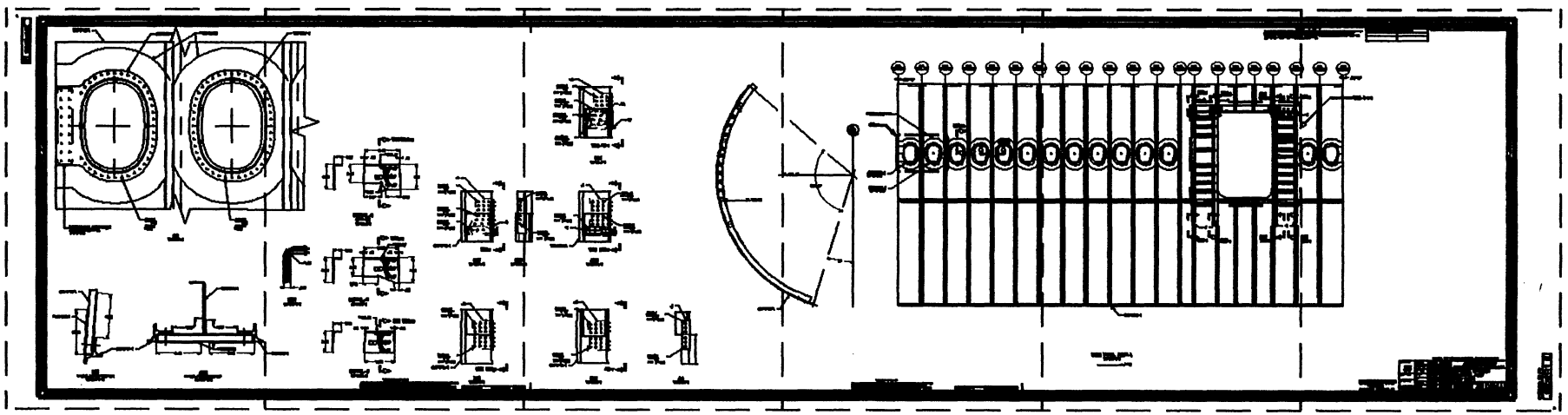

D-51 D-52 D-53 D-54 D-55 D-56

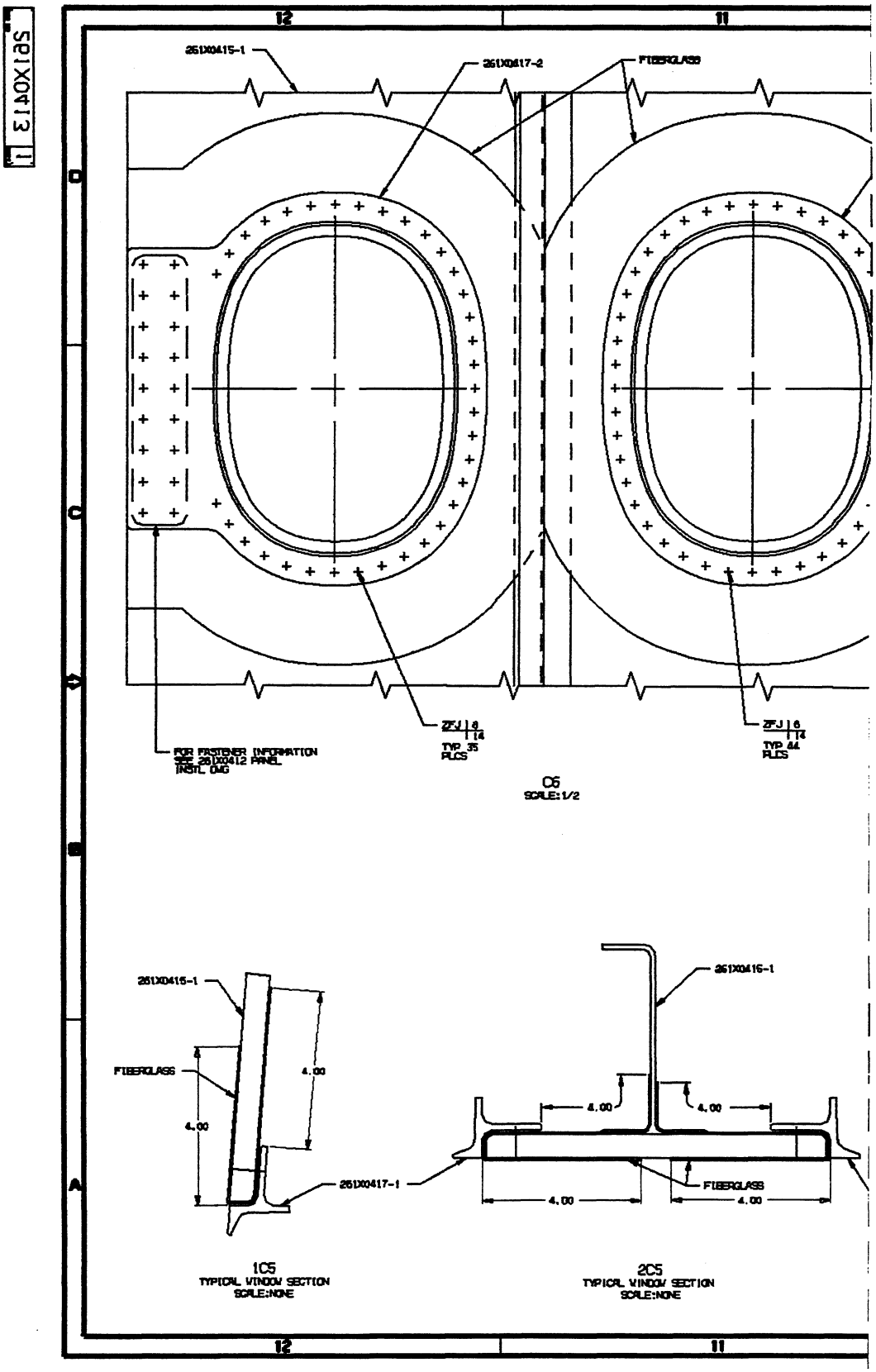
261X0415-1
261X0417-2
FIBERGLASS
FOR FASTENER INFORMATION SEE 261X0412 PANEL INSTL DWG
ZFJ 6 14 TYP 35 PLCS
ZFJ 6 14 TYP 44 PLCS
C5
SCALE: 1/2
261X0415-1
FIBERGLASS
4.00
4.00
261X0417-1
1C5
TYPICAL WINDOW SECTION
SCALE: NONE
261X0415-1
4.00
4.00
FIBERGLASS
4.00
4.00
2C5
TYPICAL WINDOW SECTION
SCALE: NONE

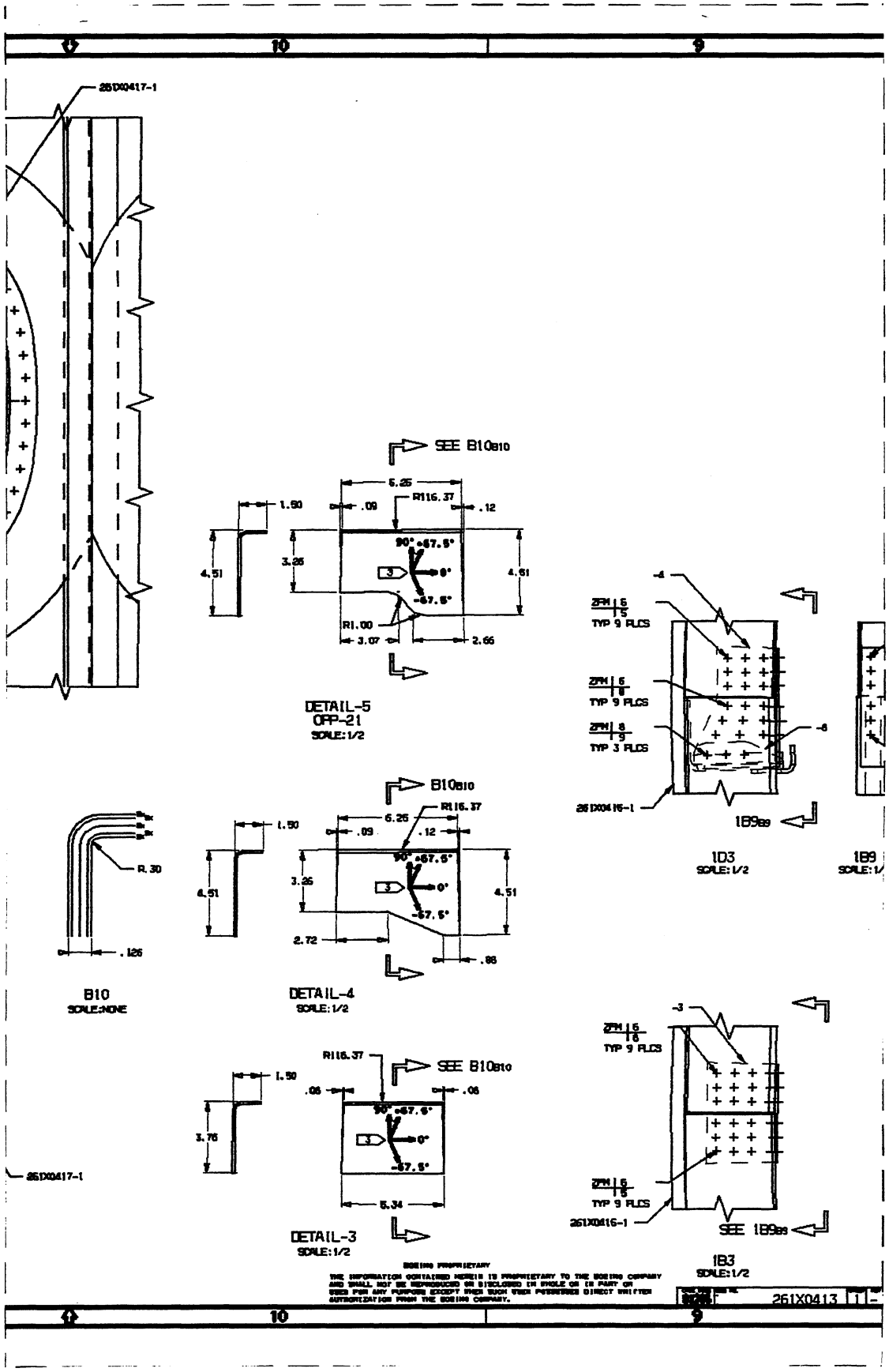

10
9
261X0417-1
SEE B10B10
6.25
R116.37
1.50
.09
.12
4.51
3.26
90° +67.5°
0°
-67.5°
R1.00
3.07
2.66
DETAIL-5
OPP-21
SCALE:1/2
-4
ZFM 6 5
TYP 9 PLCS
ZFM 6 8
TYP 9 PLCS
ZFM 8 9
TYP 3 PLCS
-6
261X0416-1
1B9B9
1D3
SCALE:1/2
1B9
SCALE:1/
B10B10
R116.37
6.25
.09
.12
1.50
4.51
3.26
90° +67.5°
0°
-67.5°
4.51
2.72
.88
R.30
.126
B10
SCALE:NONE
DETAIL-4
SCALE:1/2
-3
ZFM 6 6
TYP 9 PLCS
ZFM 6 5
TYP 9 PLCS
261X0416-1
SEE 1B9B9
1B3
SCALE:1/2
R116.37
SEE B10B10
1.50
.06
.06
3.76
90° +67.5°
0°
-67.5°
5.34
261X0417-1
DETAIL-3
SCALE:1/2
BOEING PROPRIETARY
THE INFORMATION CONTAINED HEREIN IS PROPRIETARY TO THE BOEING COMPANY AND SHALL NOT BE REPRODUCED OR DISCLOSED IN WHOLE OR IN PART OR USED FOR ANY PURPOSE EXCEPT WHEN SUCH USER POSSESSES DIRECT WRITTEN AUTHORIZATION FROM THE BOEING COMPANY.
261X0413
1
10
9

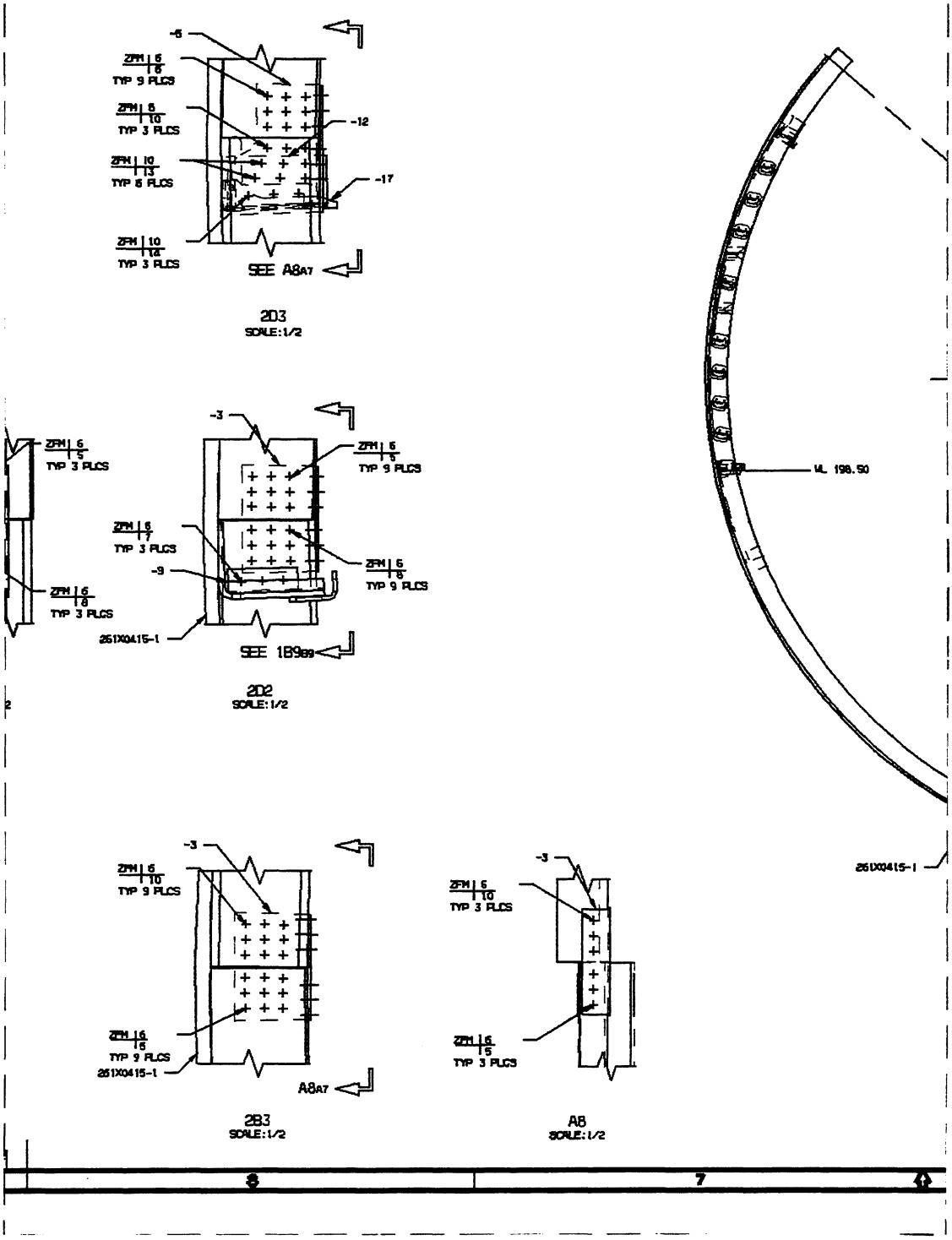
-6
ZFM | 6 | 6
TYP 9 PLCS
ZFM | 6 | 10
TYP 3 PLCS
ZFM | 10 | 13
TYP 6 PLCS
ZFM | 10 | 14
TYP 3 PLCS
-12
-17
SEE A8A7
2D3
SCALE:1/2
-3
ZFM | 6 | 5
TYP 9 PLCS
ZFM | 6 | 5
TYP 3 PLCS
ZFM | 6 | 7
TYP 3 PLCS
-9
ZFM | 6 | 8
TYP 3 PLCS
ZFM | 6 | 6
TYP 9 PLCS
251X0415-1
SEE 1B9B9
2D2
SCALE:1/2
EL. 198.50
251X0415-1
-3
ZFM | 6 | 10
TYP 9 PLCS
ZFM | 6 | 5
TYP 9 PLCS
251X0415-1
A8A7
2B3
SCALE:1/2
-3
ZFM | 6 | 10
TYP 3 PLCS
ZFM | 6 | 5
TYP 3 PLCS
A8
SCALE:1/2

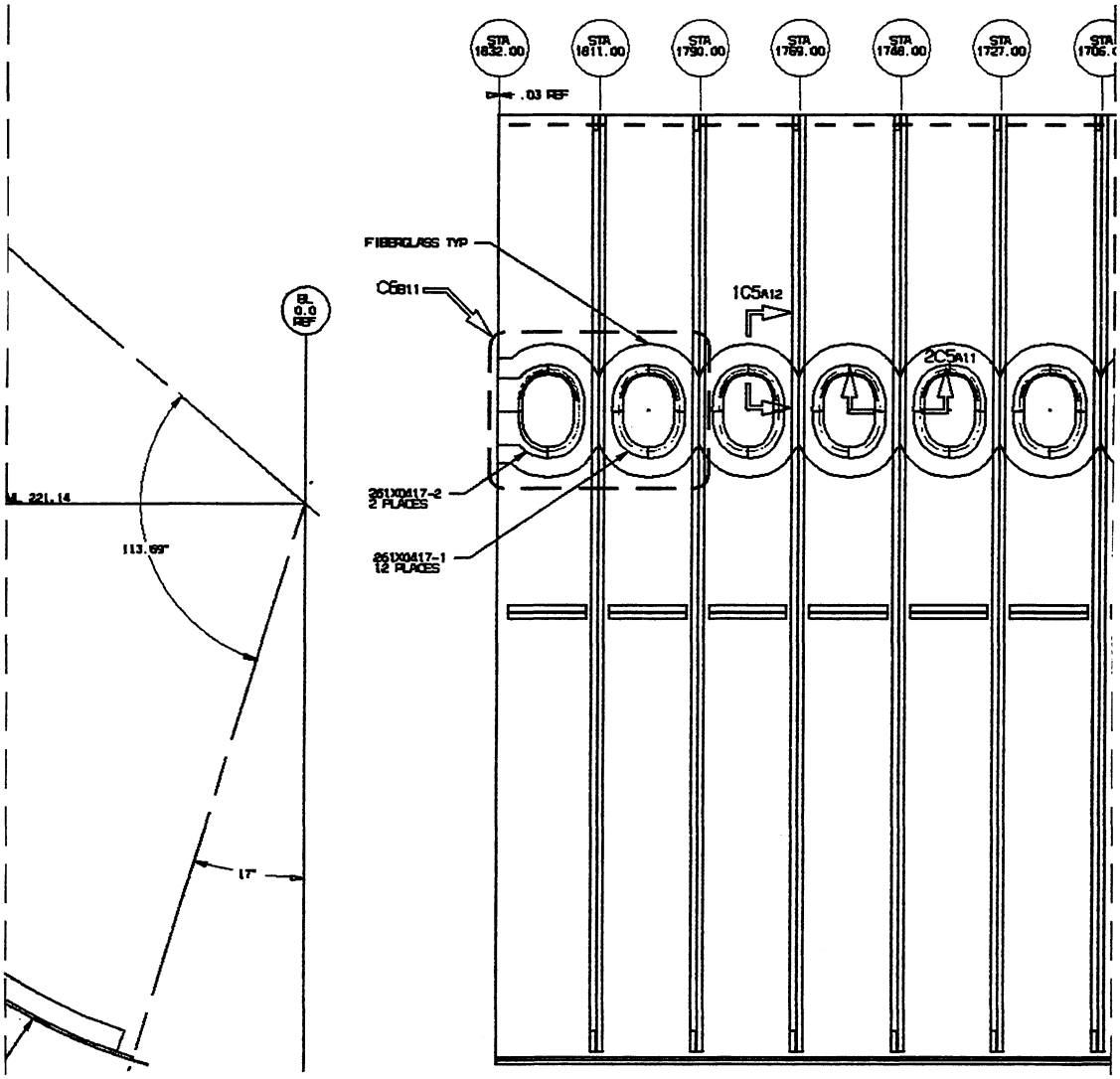

BOEING PROPRIETARY
THE INFORMATION CONTAINED HEREIN IS PROPRIETARY TO THE BOEING COMPANY AND SHALL NOT BE REPRODUCED OR DISCLOSED IN WHOLE OR IN PART OR USED FOR ANY PURPOSE EXCEPT THOSE USES EXPRESSLY AUTHORIZED IN WRITING BY THE BOEING COMPANY.

261X0413

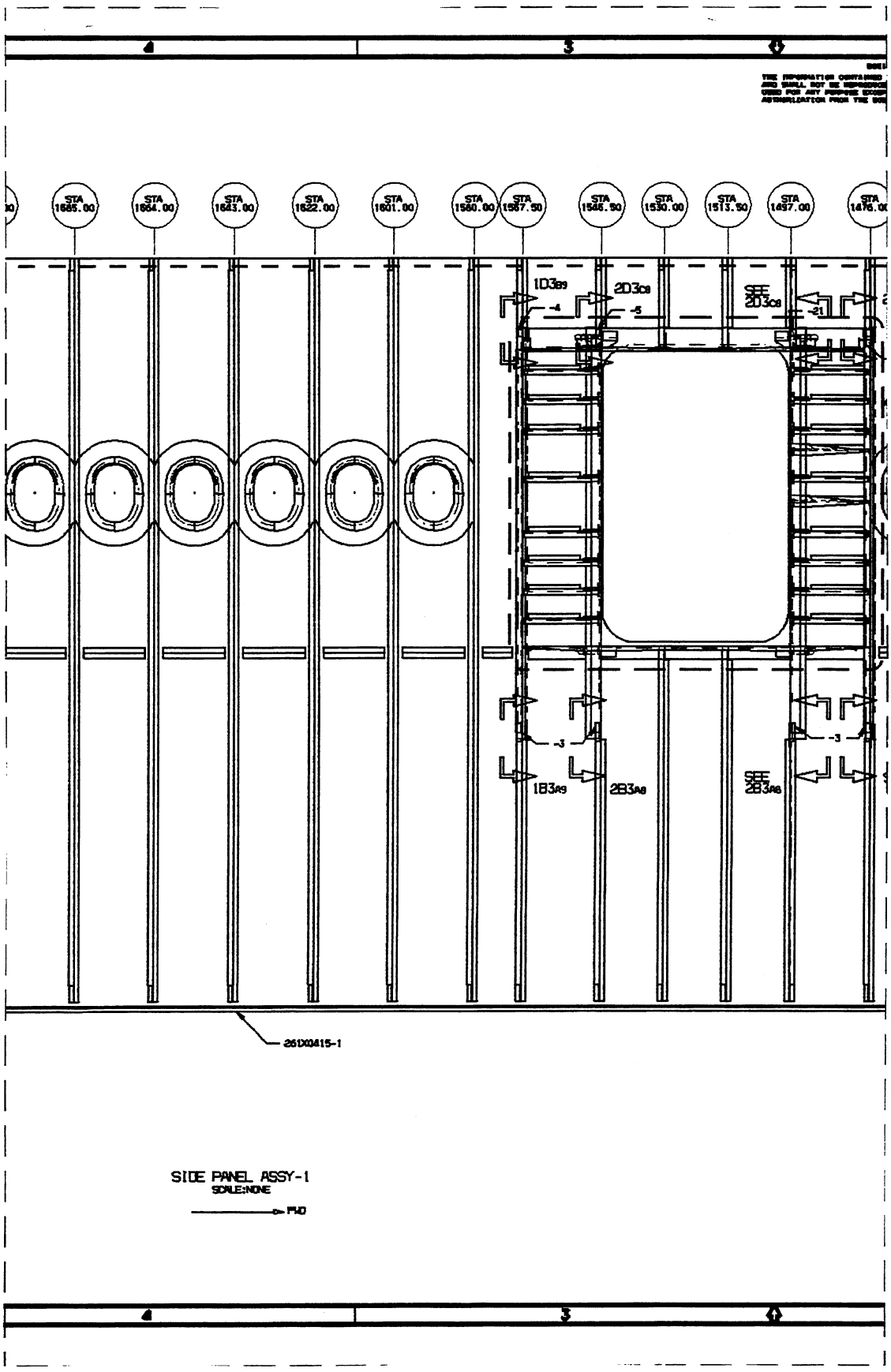
STA 1685.00
STA 1664.00
STA 1643.00
STA 1622.00
STA 1601.00
STA 1580.00
STA 1567.50
STA 1548.50
STA 1530.00
STA 1513.50
STA 1497.00
1D3B9
-4
2D3C8
-5
SEE 2D3C8
-21
-3
-3
1B3A9
2B3A8
SEE 2B3A8
261X0415-1
SIDE PANEL ASSY-1
SCALE:NONE
FWD

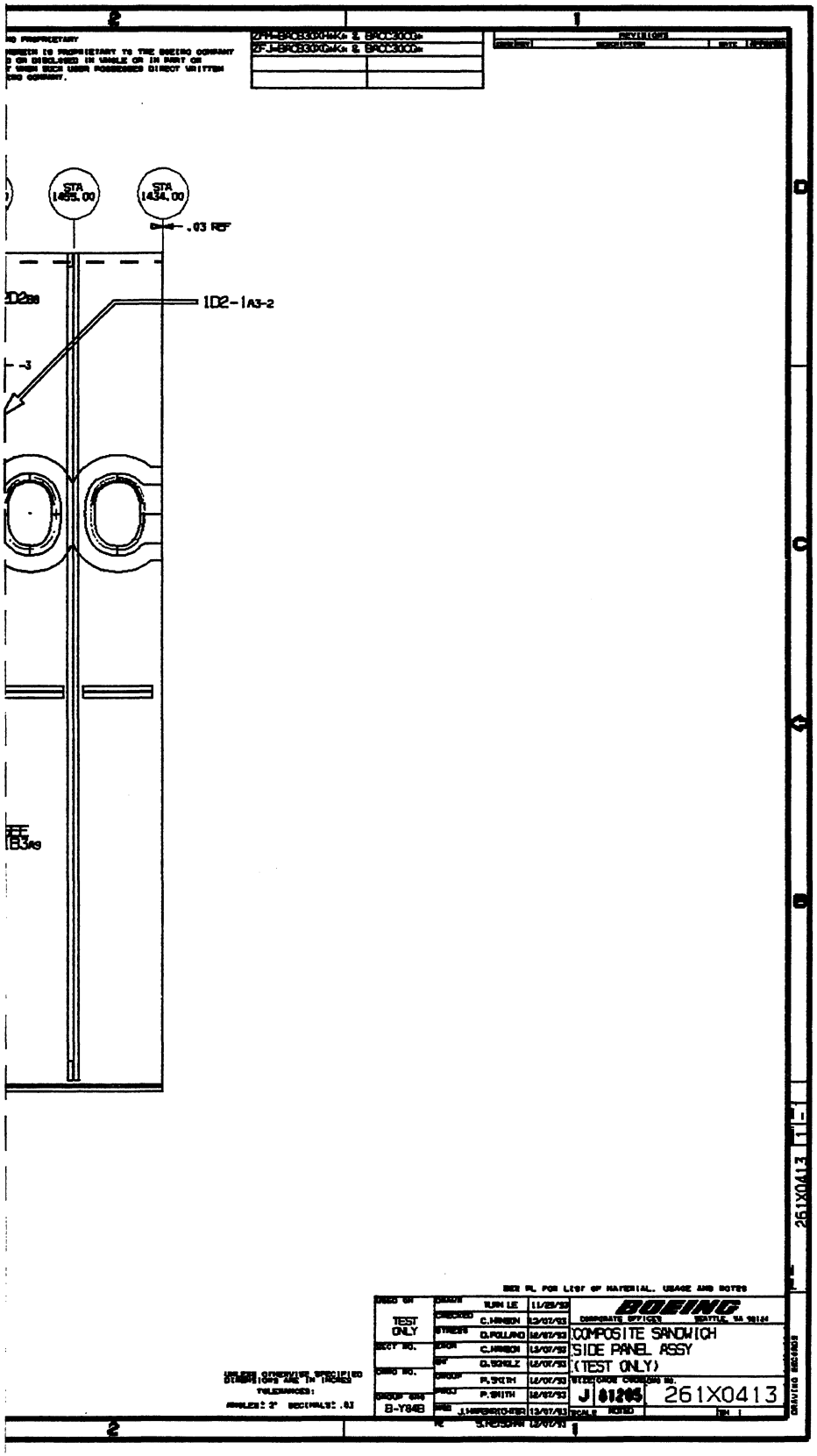
STA 1455.00
STA 1434.00
.03 REF
1D2-1A3-2
TEST ONLY
COMPOSITE SANDWICH
SIDE PANEL ASSY
(TEST ONLY)
J 81205
261X0413
261X0413

D-57

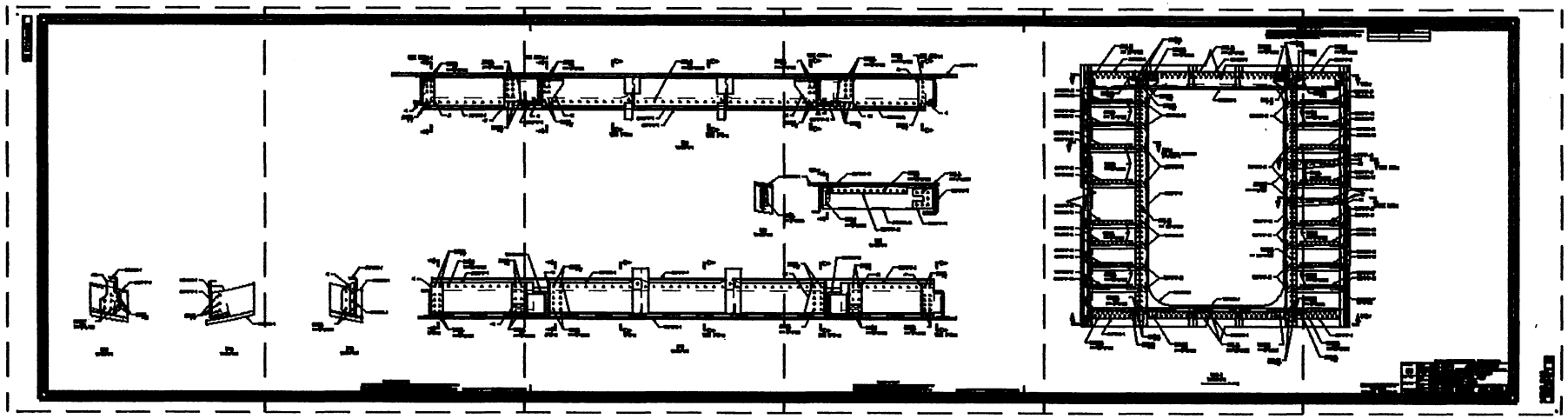

D-58 D-59 D-60 D-61 D-62 D-63

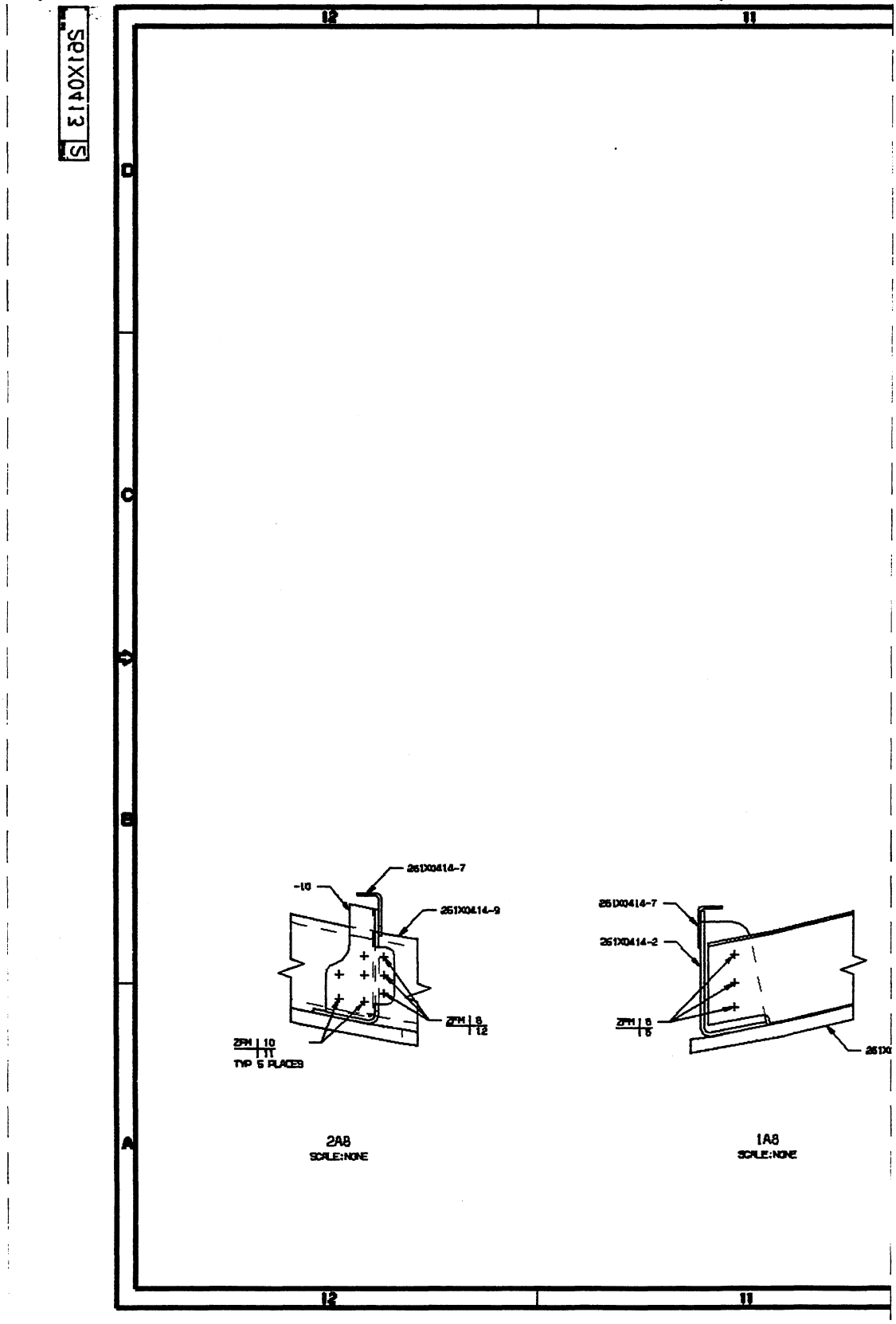
261X0414-7
-10
261X0414-9
ZFM 8
12
ZFM 10
11
TYP 5 PLACES
2A8
SCALE:NONE
261X0414-7
261X0414-2
ZFM 8
6
1A8
SCALE:NONE

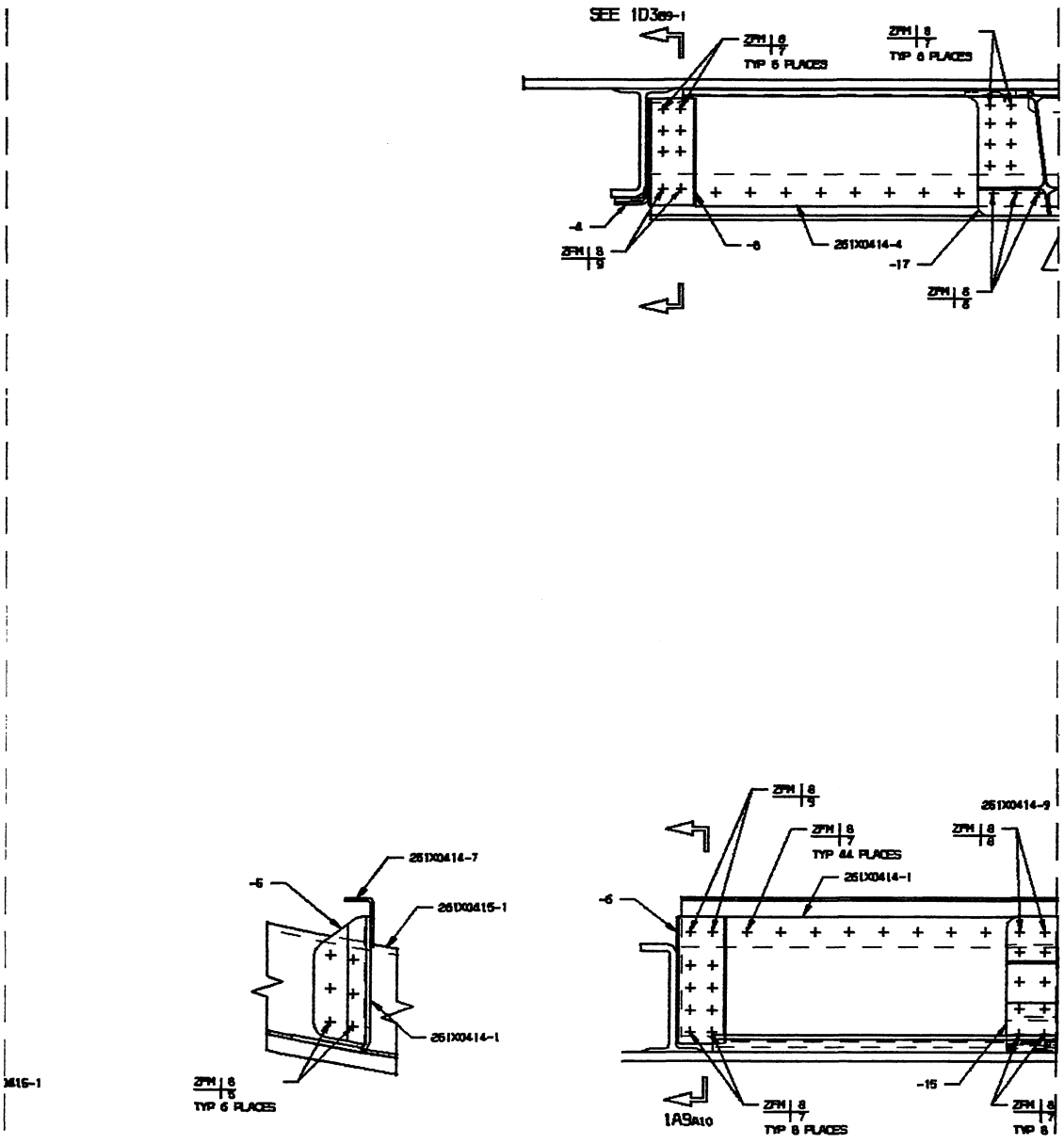

1A9
SCALE:NONE

BOEING PROPRIETARY
THE INFORMATION CONTAINED HEREIN IS PROPRIETARY TO THE BOEING COMPANY AND SHALL NOT BE REPRODUCED OR DISCLOSED IN WHOLE OR IN PART OR USED FOR ANY PURPOSE EXCEPT WHEN SUCH USES POSSESSES DIRECT WRITTEN AUTHORIZATION FROM THE BOEING COMPANY.

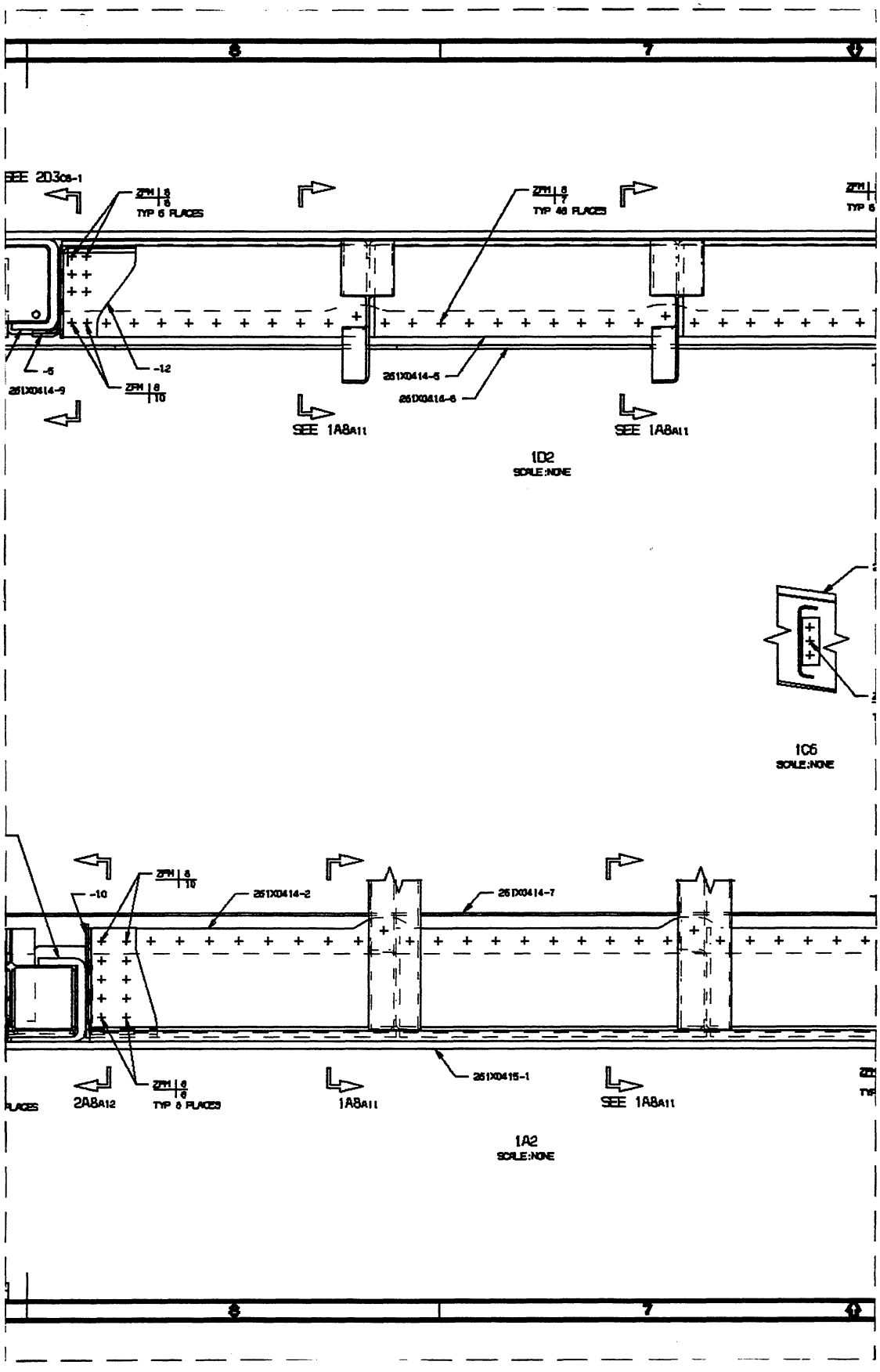

SEE 2D3C8-1
ZFM 8 6
TYP 6 PLACES
ZFM 8 7
TYP 48 PLACES
-5
-12
251X0414-9
ZFM 8 10
251X0414-5
251X0414-6
SEE 1A8A11
SEE 1A8A11
1D2
SCALE:NONE
1C6
SCALE:NONE
-10
ZFM 8 10
251X0414-2
251X0414-7
251X0415-1
2A8A12
ZFM 8 6
TYP 8 PLACES
1A8A11
SEE 1A8A11
1A2
SCALE:NONE

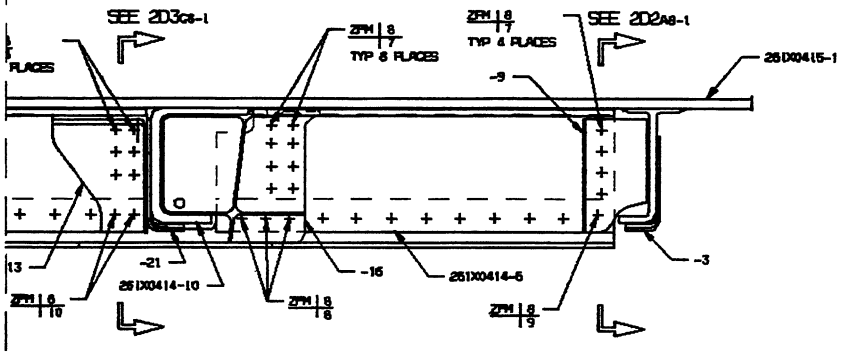

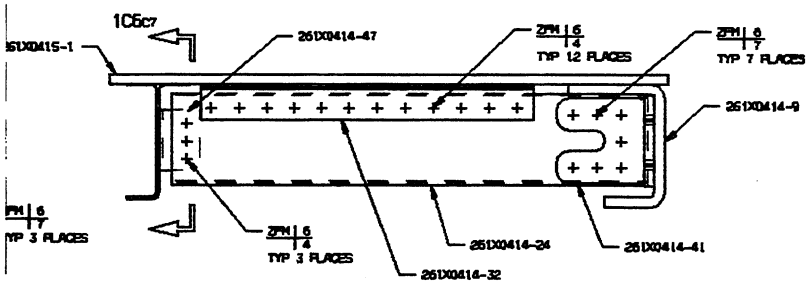

1C3
SCALE:NONE

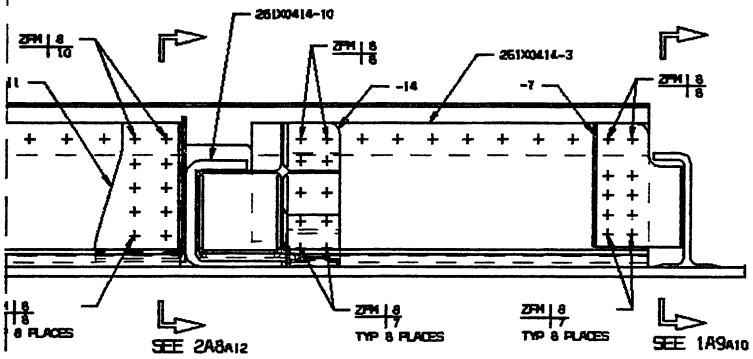

THE INFORMATION CONTAINED HEREIN IS PROPRIETARY TO THE BOEING COMPANY AND SHALL NOT BE REPRODUCED OR DISCLOSED IN WHOLE OR IN PART OR USED FOR ANY PURPOSE EXCEPT THOSE FOR WHICH PERMISSION IS EXPRESSLY GRANTED BY THE BOEING COMPANY.

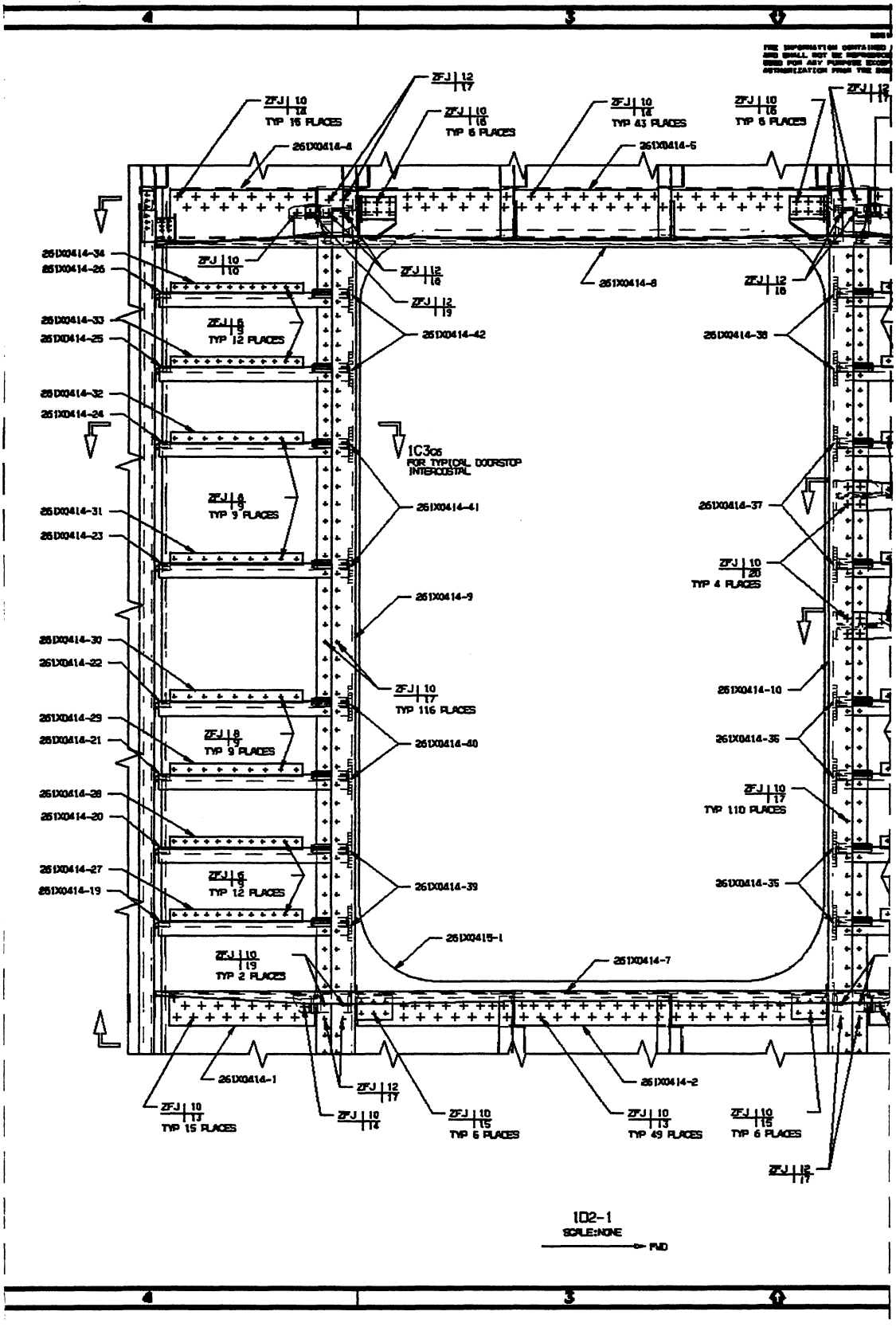
ZFJ | 10 | 16 TYP 16 PLACES
ZFJ | 12 | 17
ZFJ | 10 | 16 TYP 6 PLACES
ZFJ | 10 | 16 TYP 43 PLACES
ZFJ | 10 | 16 TYP 6 PLACES
261X0414-4
261X0414-5
261X0414-34
261X0414-26
261X0414-33
261X0414-25
261X0414-32
261X0414-24
261X0414-31
261X0414-23
261X0414-30
261X0414-22
261X0414-29
261X0414-21
261X0414-28
261X0414-20
261X0414-27
261X0414-19
ZFJ | 6 | 9 TYP 12 PLACES
ZFJ | 6 | 9 TYP 9 PLACES
ZFJ | 8 | 9 TYP 9 PLACES
ZFJ | 6 | 9 TYP 12 PLACES
ZFJ | 10 | 19 TYP 2 PLACES
ZFJ | 10 | 10
ZFJ | 12 | 16
ZFJ | 12 | 19
261X0414-42
261X0414-8
ZFJ | 12 | 16
261X0414-38
1C305 FOR TYPICAL DOORSTOP INTERCOSTAL
261X0414-41
261X0414-37
ZFJ | 10 | 20 TYP 4 PLACES
261X0414-9
ZFJ | 10 | 17 TYP 116 PLACES
261X0414-40
261X0414-10
261X0414-36
ZFJ | 10 | 17 TYP 110 PLACES
261X0414-39
261X0414-35
261X0415-1
261X0414-7
261X0414-1
261X0414-2
ZFJ | 10 | 13 TYP 15 PLACES
ZFJ | 12 | 17
ZFJ | 10 | 14
ZFJ | 10 | 15 TYP 6 PLACES
ZFJ | 10 | 13 TYP 49 PLACES
ZFJ | 10 | 15 TYP 6 PLACES
ZFJ | 12 | 17
102-1
SCALE:NONE
FWD

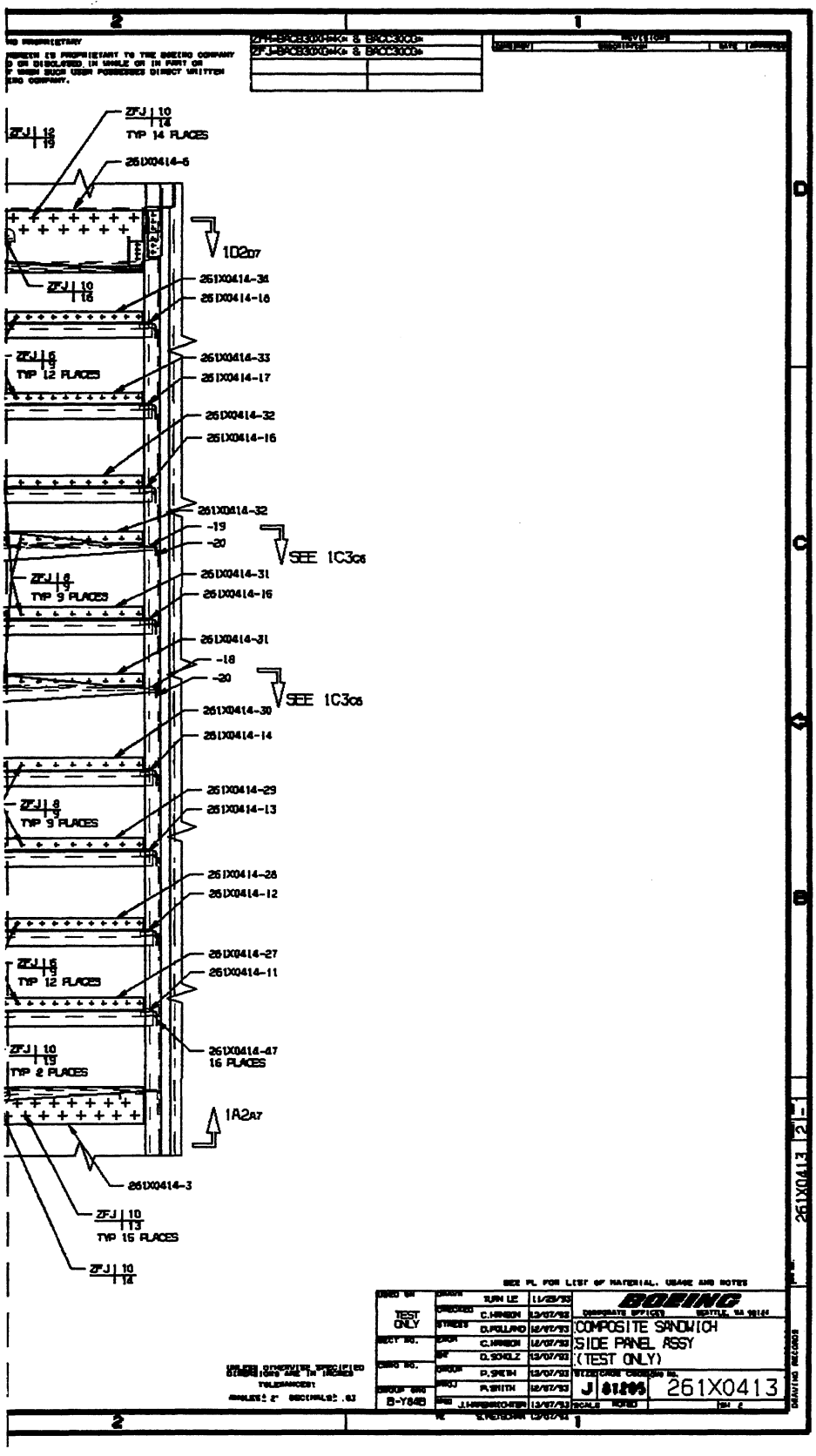
ZFJ 10 14 TYP 14 PLACES
261X0414-6
1D2D7
261X0414-38
261X0414-18
ZFJ 6 9 TYP 12 PLACES
261X0414-33
261X0414-17
261X0414-32
261X0414-16
261X0414-32
-19
-20
SEE 1C3C6
ZFJ 6 9 TYP 9 PLACES
261X0414-31
261X0414-16
261X0414-31
-18
-20
SEE 1C3C6
261X0414-30
261X0414-14
ZFJ 8 9 TYP 9 PLACES
261X0414-29
261X0414-13
261X0414-28
261X0414-12
ZFJ 6 9 TYP 12 PLACES
261X0414-27
261X0414-11
ZFJ 10 13 TYP 2 PLACES
261X0414-47 16 PLACES
1A2A7
261X0414-3
ZFJ 10 13 TYP 15 PLACES
ZFJ 10 14
TEST ONLY
B-Y845
COMPOSITE SANDWICH
SIDE PANEL ASSY
(TEST ONLY)
J 81205
261X0413
261X0413 S

D-64

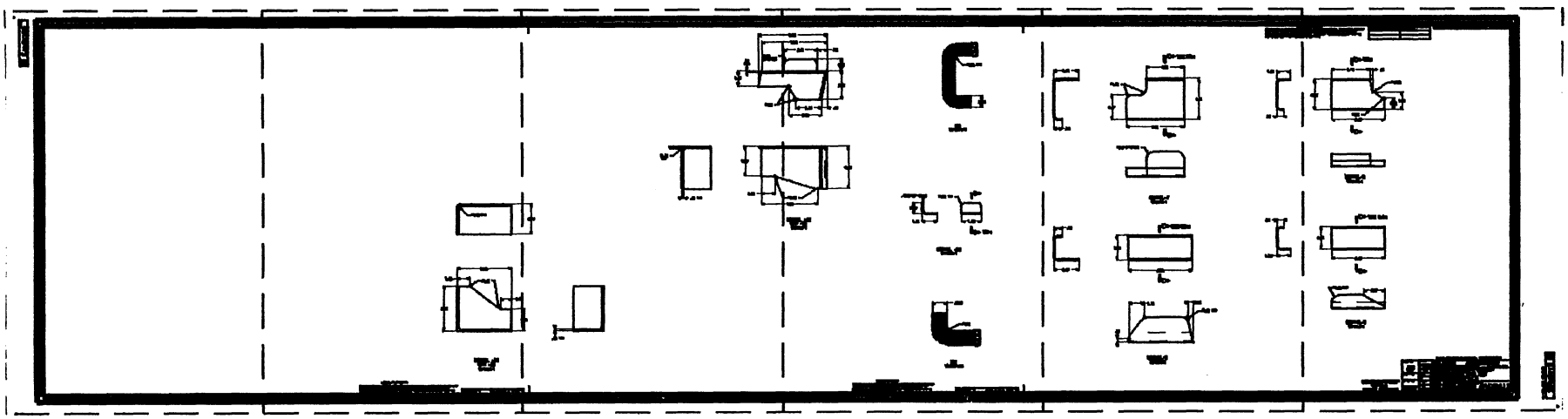

D-65 D-66 D-67 D-68 D-69

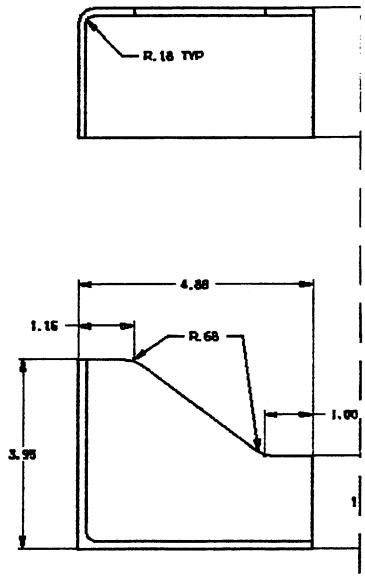

DETAIL -12
OPP -13
SCALE: 1/1

BOEING PROPRIETARY
THE INFORMATION CONTAINED HEREIN IS PROPRIETARY TO THE BOEING COMPANY AND SHALL NOT BE REPRODUCED OR DISCLOSED IN WHOLE OR IN PART OR USED FOR ANY PURPOSE EXCEPT THOSE SUCH USES PERMITTED DIRECT WRITTEN AUTHORIZATION FROM THE BOEING COMPANY.

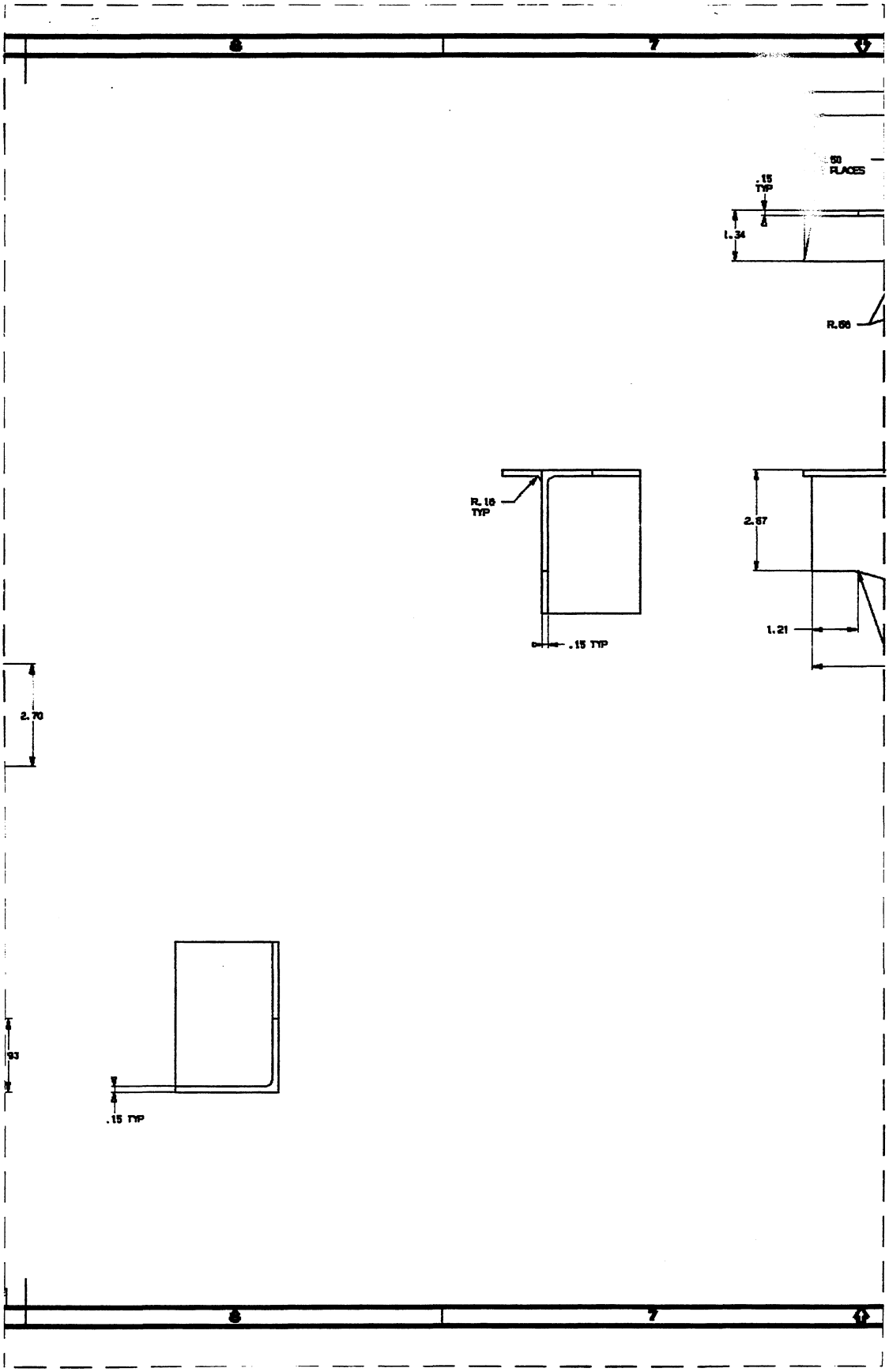
8
7
50
PLACES
.15
TYP
1.34
R.66
R.16
TYP
.15 TYP
2.87
1.21
2.70
.93
.15 TYP

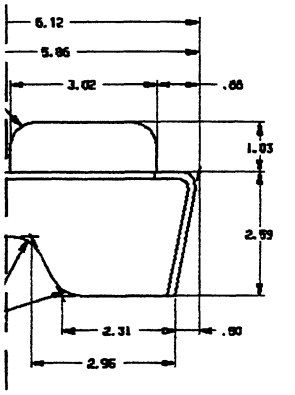

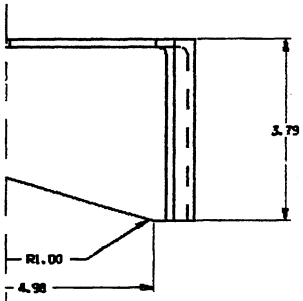

DETAIL -10
OPP -11
SCALE: 1/1

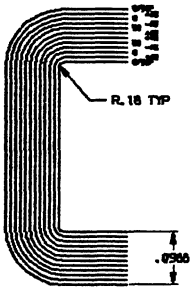

D2
SCALE:NONE

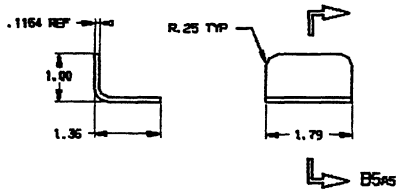

DETAIL -20
SCALE: 1/1

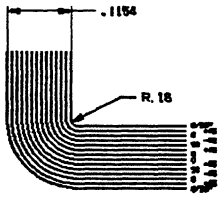

B5
SCALE:NONE

THE INFORMATION CONTAINED HEREIN IS PROPRIETARY TO THE BOEING COMPANY AND SHALL NOT BE REPRODUCED OR DISCLOSED IN WHOLE OR IN PART OR USED FOR ANY PURPOSE EXCEPT WHEN SUCH USE PERMITTED DIRECT WRITTEN AUTHORIZATION FROM THE BOEING COMPANY.

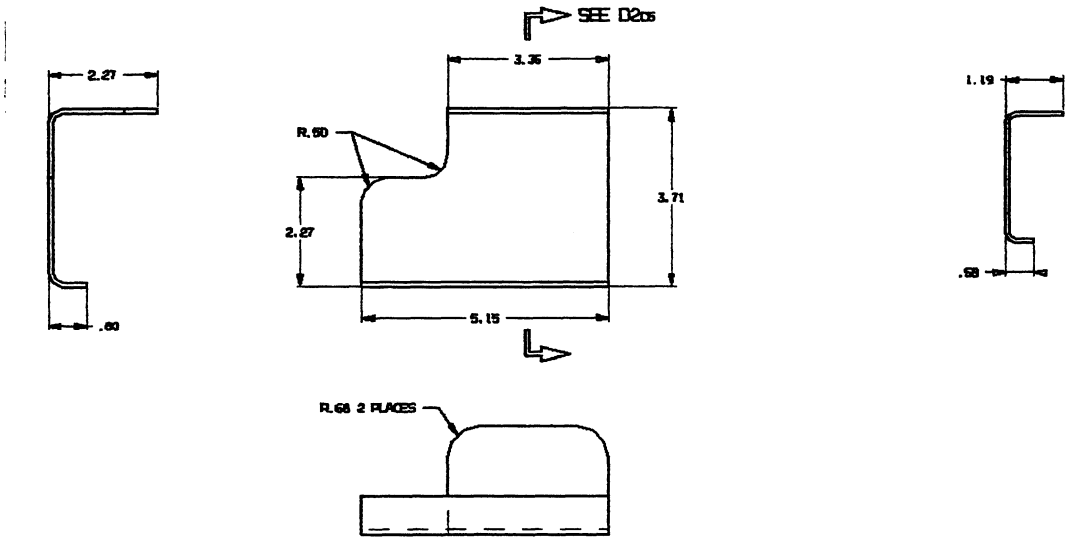

DETAIL-7
SCALE: 1/1

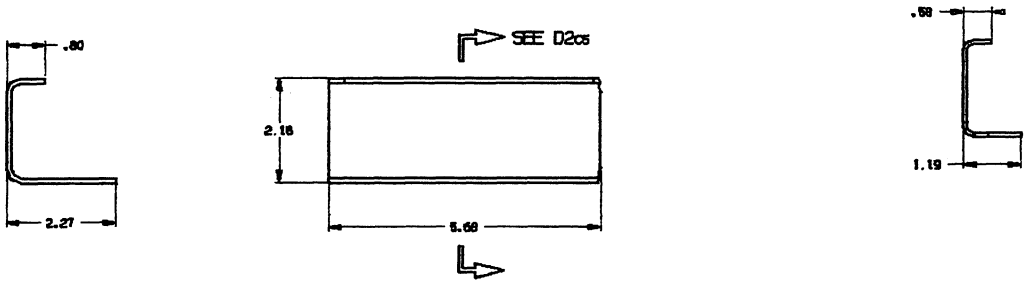

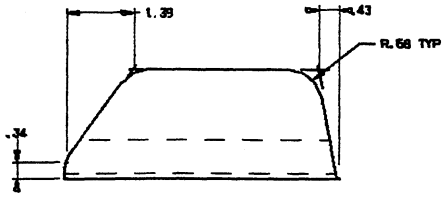

DETAIL-6
SCALE: 1/1

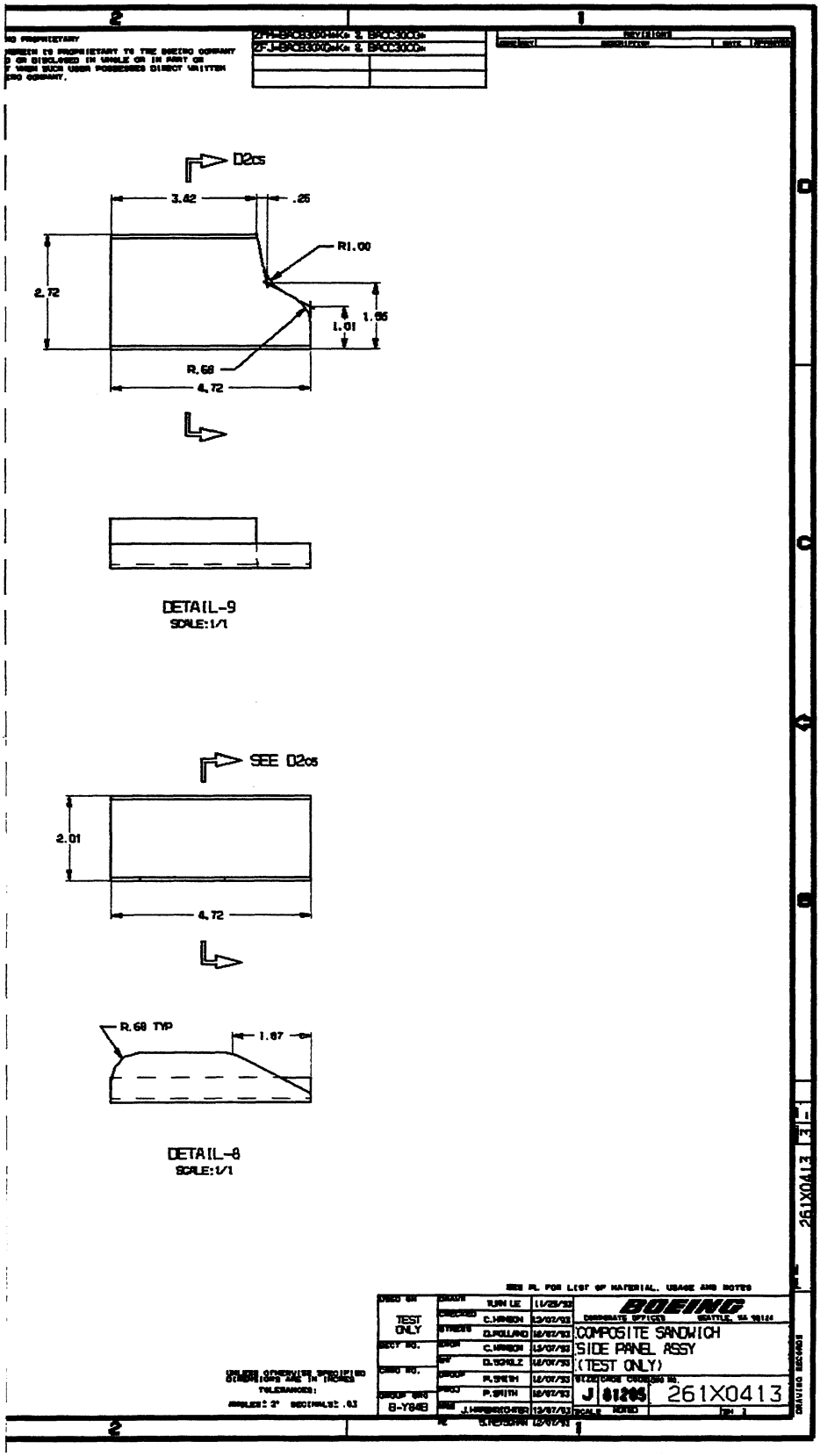
D2cs
3.42
.26
R1.00
2.72
1.01
1.95
R.68
4.72
DETAIL-9
SCALE: 1/1
SEE D2cs
2.01
4.72
R.68 TYP
1.87
DETAIL-8
SCALE: 1/1
TEST ONLY
COMPOSITE SANDWICH
SIDE PANEL ASSY
(TEST ONLY)
J 81205
261X0413
BOEING

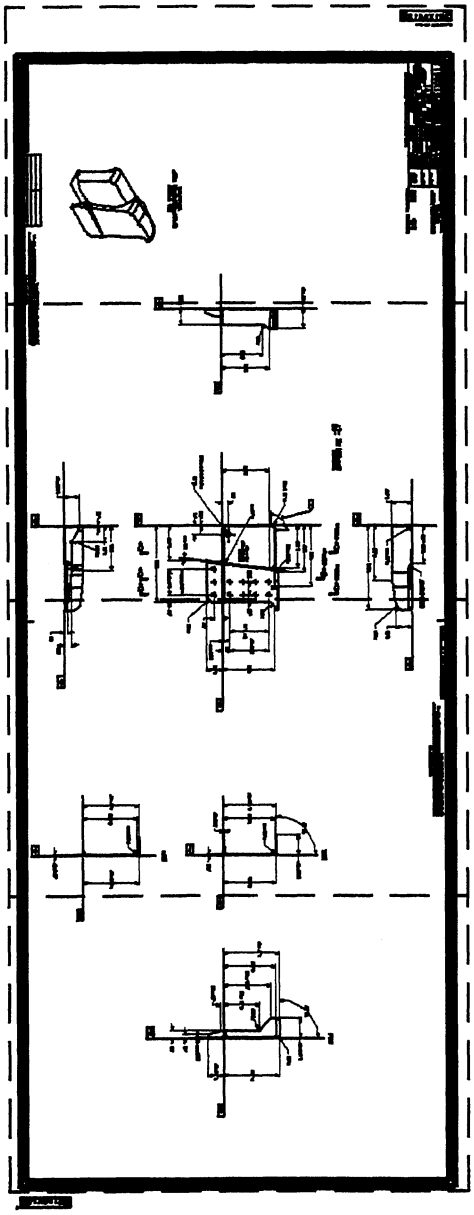

D-74

D-73

D-72

D-71

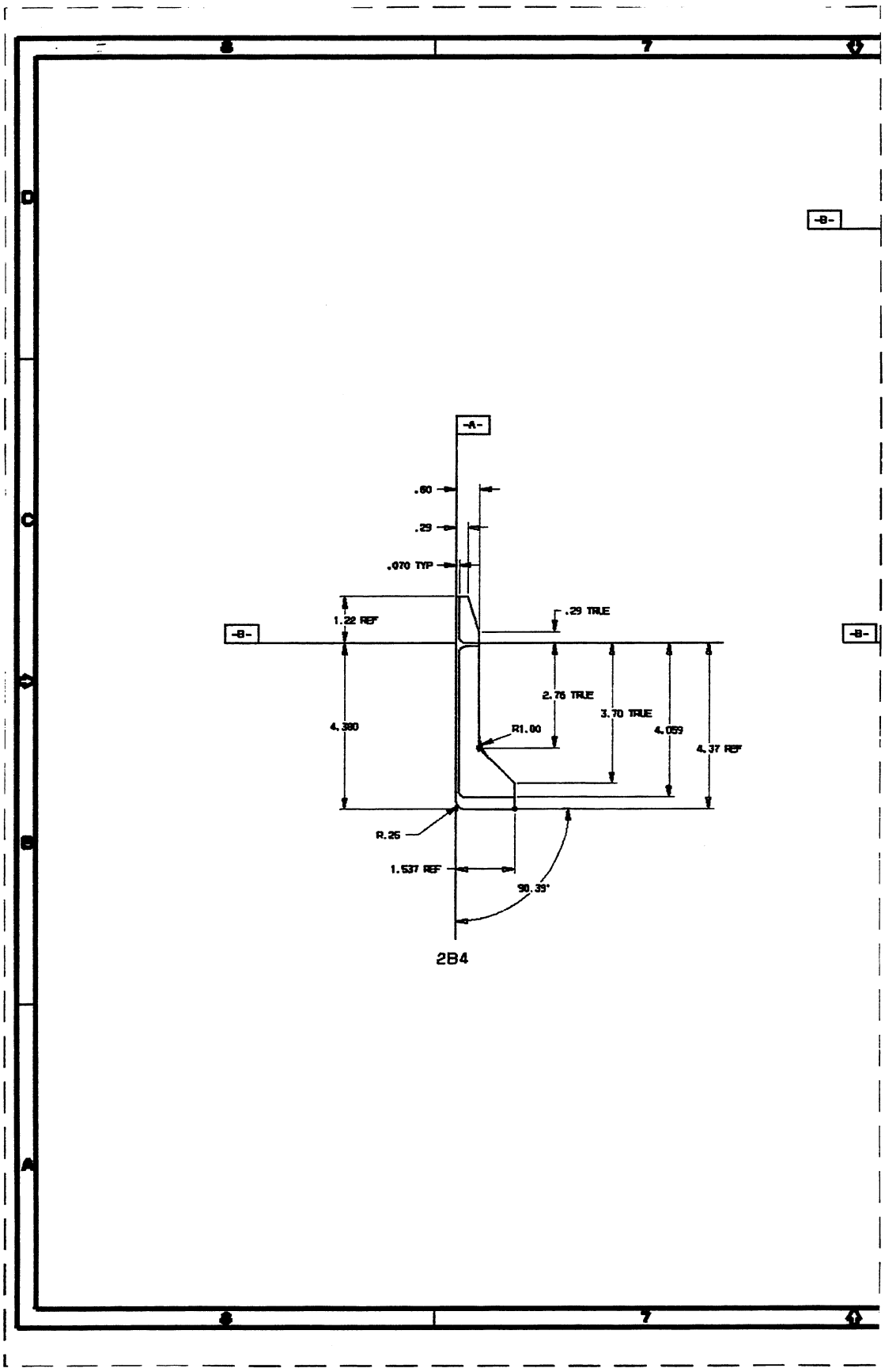
-A-
-B-
-B-
-B-
.60
.29
.070 TYP
1.22 REF
.29 TRUE
2.76 TRUE
3.70 TRUE
4.059
4.37 REF
4.380
R1.00
R.25
1.537 REF
90.39°
2B4

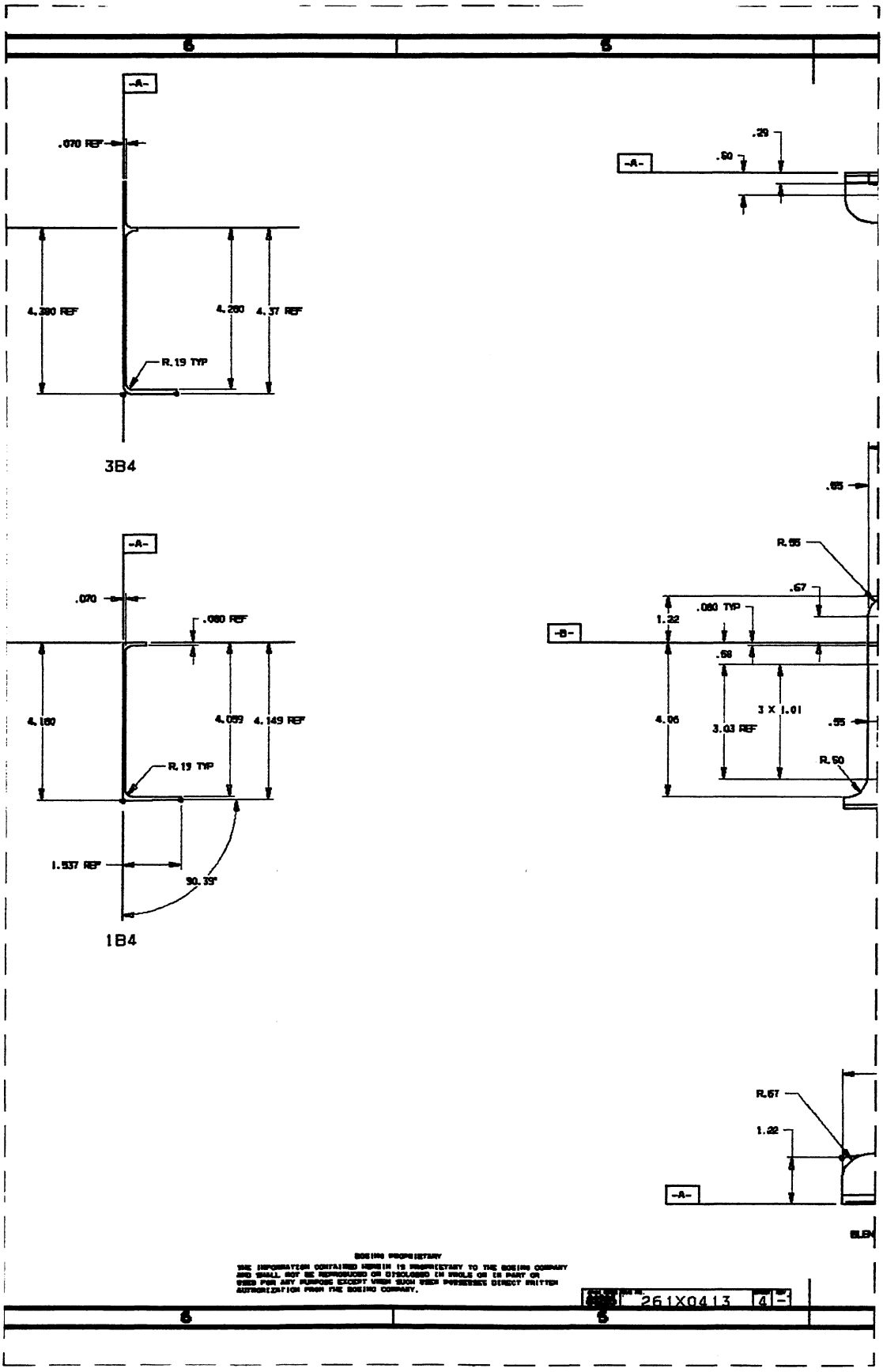
-A-
.070 REF
4.380 REF
4.260
4.37 REF
R.19 TYP
3B4
-A-
.070
.080 REF
4.180
4.059
4.149 REF
R.19 TYP
1.537 REF
90.35°
1B4
.29
.50
-A-
.65
R.65
.67
.080 TYP
1.22
-B-
.58
4.06
3.03 REF
3 X 1.01
.55
R.50
R.67
1.22
-A-
BLEN
BOEING PROPRIETARY
THE INFORMATION CONTAINED HEREIN IS PROPRIETARY TO THE BOEING COMPANY AND SHALL NOT BE REPRODUCED OR DISCLOSED IN WHOLE OR IN PART OR USED FOR ANY PURPOSE EXCEPT WHEN SUCH USE POSSESSES DIRECT WRITTEN AUTHORIZATION FROM THE BOEING COMPANY.
261X0413
4
6
5

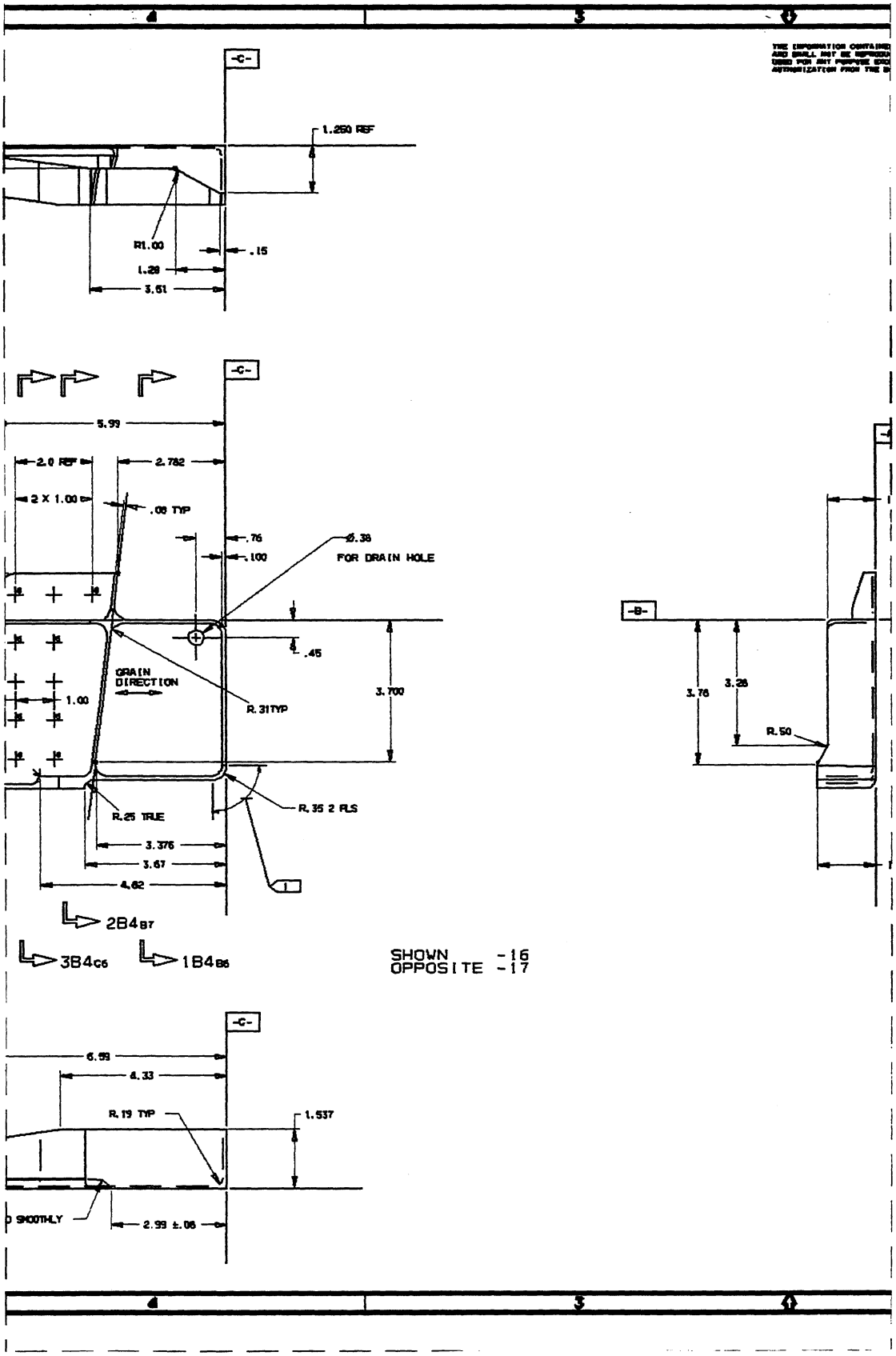
-C-
1.250 REF
R1.00
.15
1.28
3.61
-C-
5.99
2.0 REF
2.782
2 X 1.00
.08 TYP
.76
.100
Ø.38
FOR DRAIN HOLE
.45
GRAIN DIRECTION
1.00
R.31 TYP
3.700
R.25 TRUE
R.35 2 PLS
3.376
3.67
4.62
2B4B7
3B4C6
1B4B6
-B-
3.76
3.28
R.50
SHOWN -16
OPPOSITE -17
-C-
6.99
4.33
R.19 TYP
1.537
SMOOTHLY
2.99 ±.06

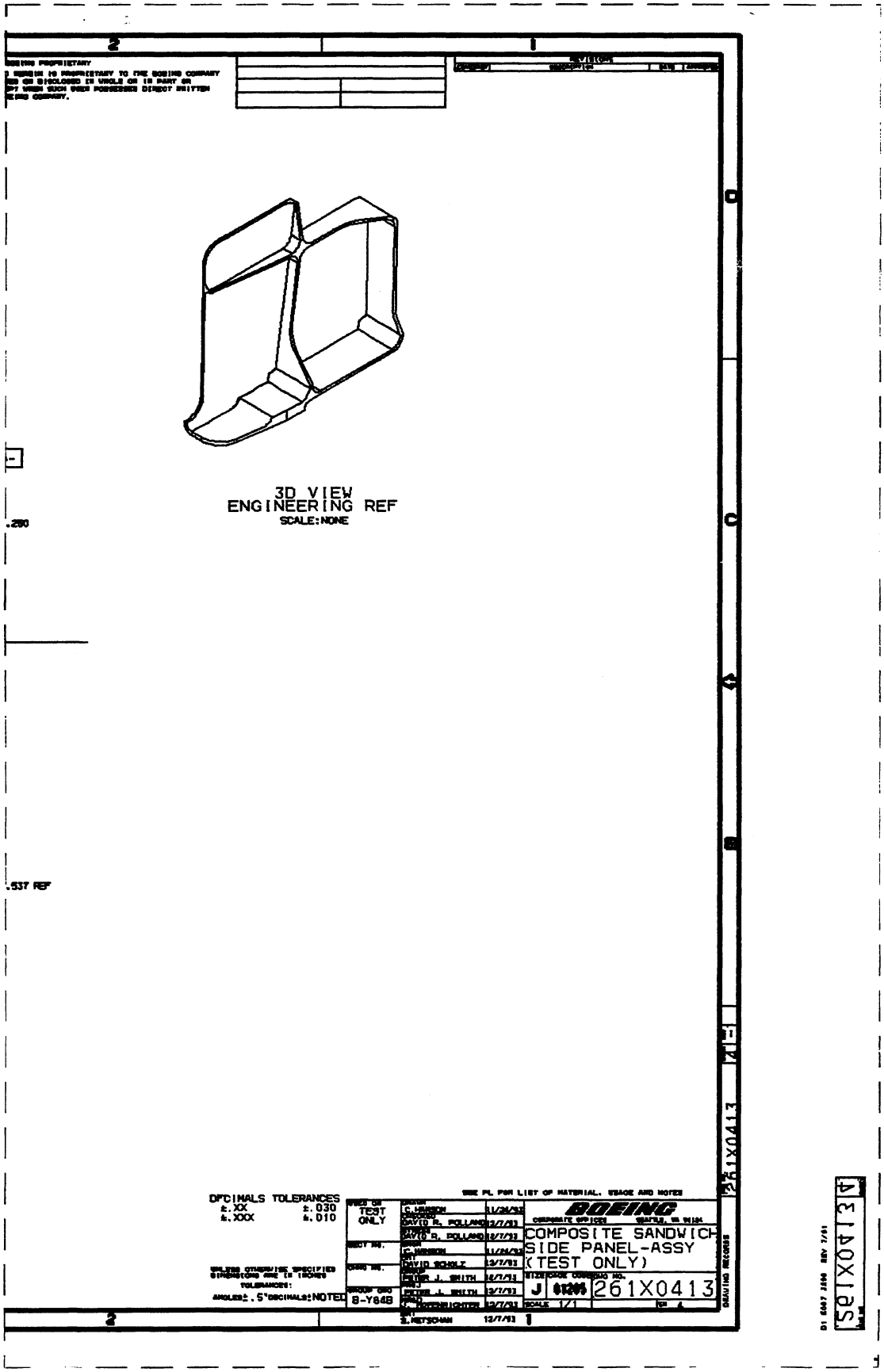
3D VIEW
ENGINEERING REF
SCALE:NONE
.280
.537 REF
DECIMALS TOLERANCES
±.XX ±.030
±.XXX ±.010
TEST ONLY
8-Y84B
BOEING
COMPOSITE SANDWICH
SIDE PANEL-ASSY
(TEST ONLY)
J
261X0413
SCALE 1/1
261X0413

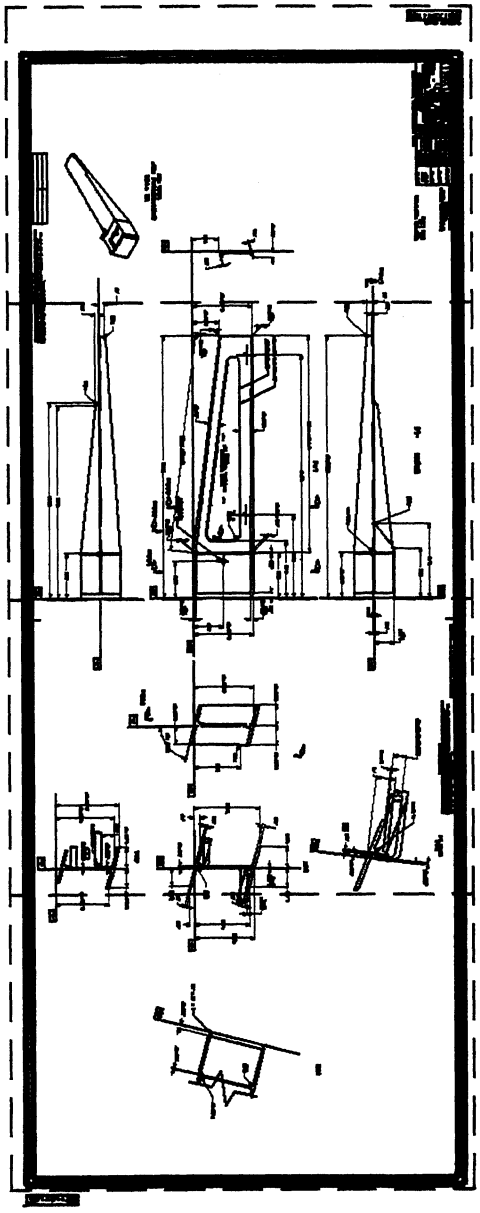

D-79

D-78

D-77

D-76

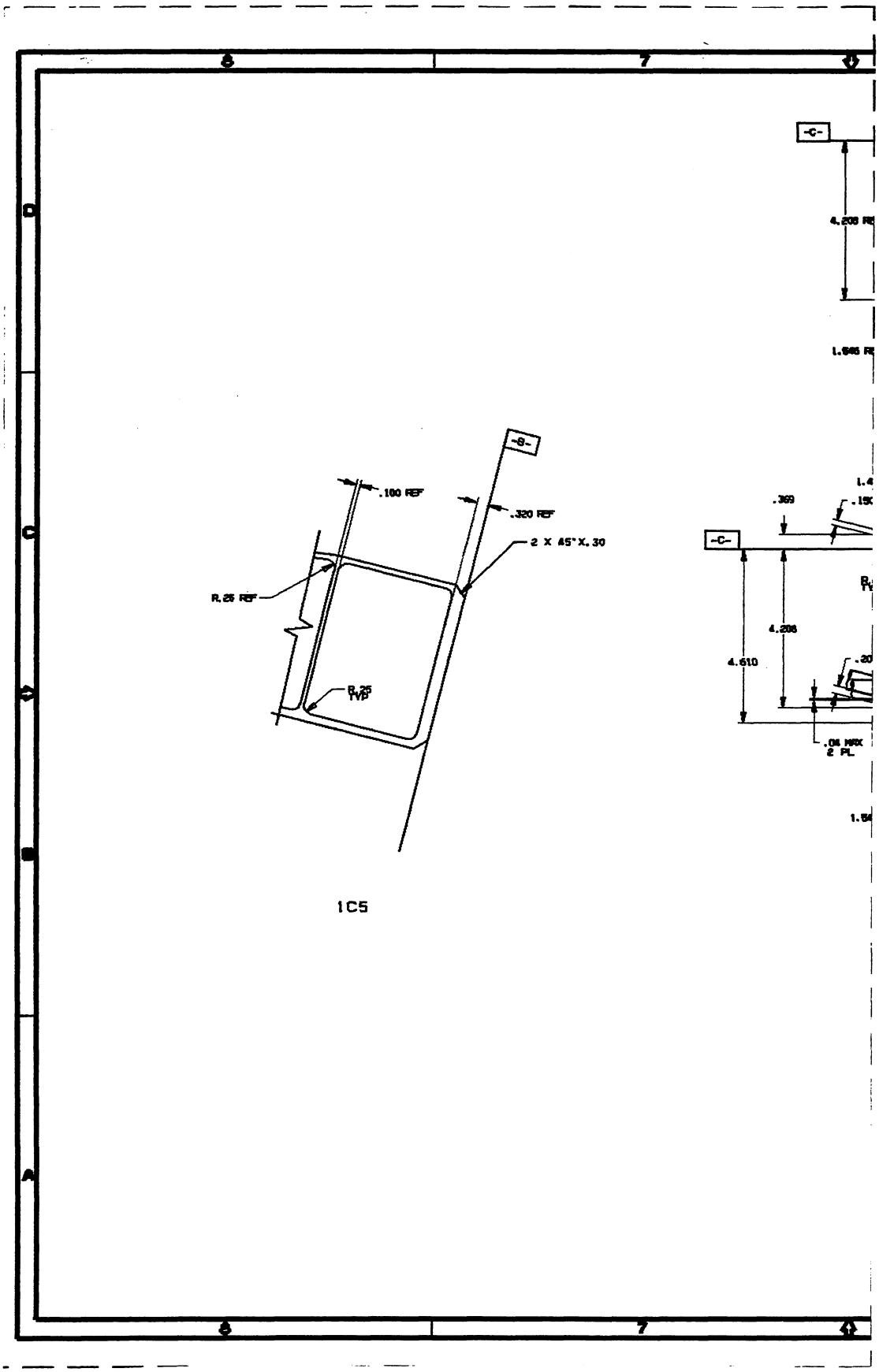

-C-
4.208 RE
1.545 RE
-B-
.100 REF
.320 REF
2 X 45° X .30
R.25 REF
R.25 TYP
1C5
.369
-C-
4.208
4.610
.04 MAX
2 PL

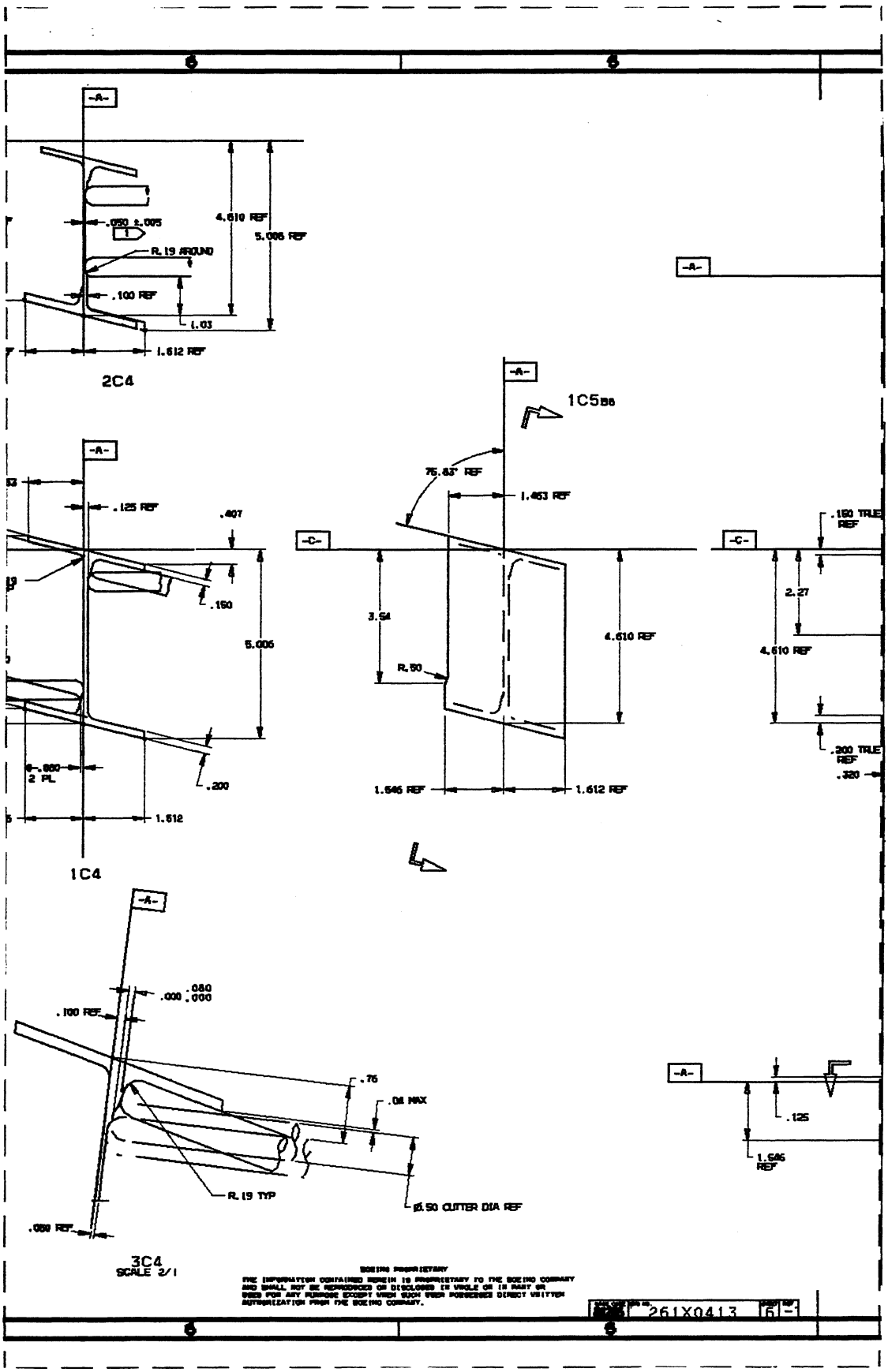
-A-
.050 ±.005
4.610 REF
5.006 REF
R.19 AROUND
.100 REF
1.03
1.612 REF
2C4
-A-
1C5B6
-A-
.125 REF
.407
.150
5.006
.200
6-.060
2 PL
1.612
1C4
75.83° REF
1.463 REF
-C-
3.54
4.610 REF
R.50
1.646 REF
1.612 REF
-C-
.150 TRUE REF
2.27
4.610 REF
.200 TRUE REF
.320
-A-
.100 REF
.000 .080 .000
.76
.06 MAX
R.19 TYP
ø1.50 CUTTER DIA REF
.060 REF
3C4
SCALE 2/1
-A-
.125
1.646 REF
BOEING PROPRIETARY
THE INFORMATION CONTAINED HEREIN IS PROPRIETARY TO THE BOEING COMPANY AND SHALL NOT BE REPRODUCED OR DISCLOSED IN WHOLE OR IN PART OR USED FOR ANY PURPOSE EXCEPT WHEN SUCH USES POSSESSED DIRECT WRITTEN AUTHORIZATION FROM THE BOEING COMPANY.
261X0413
6

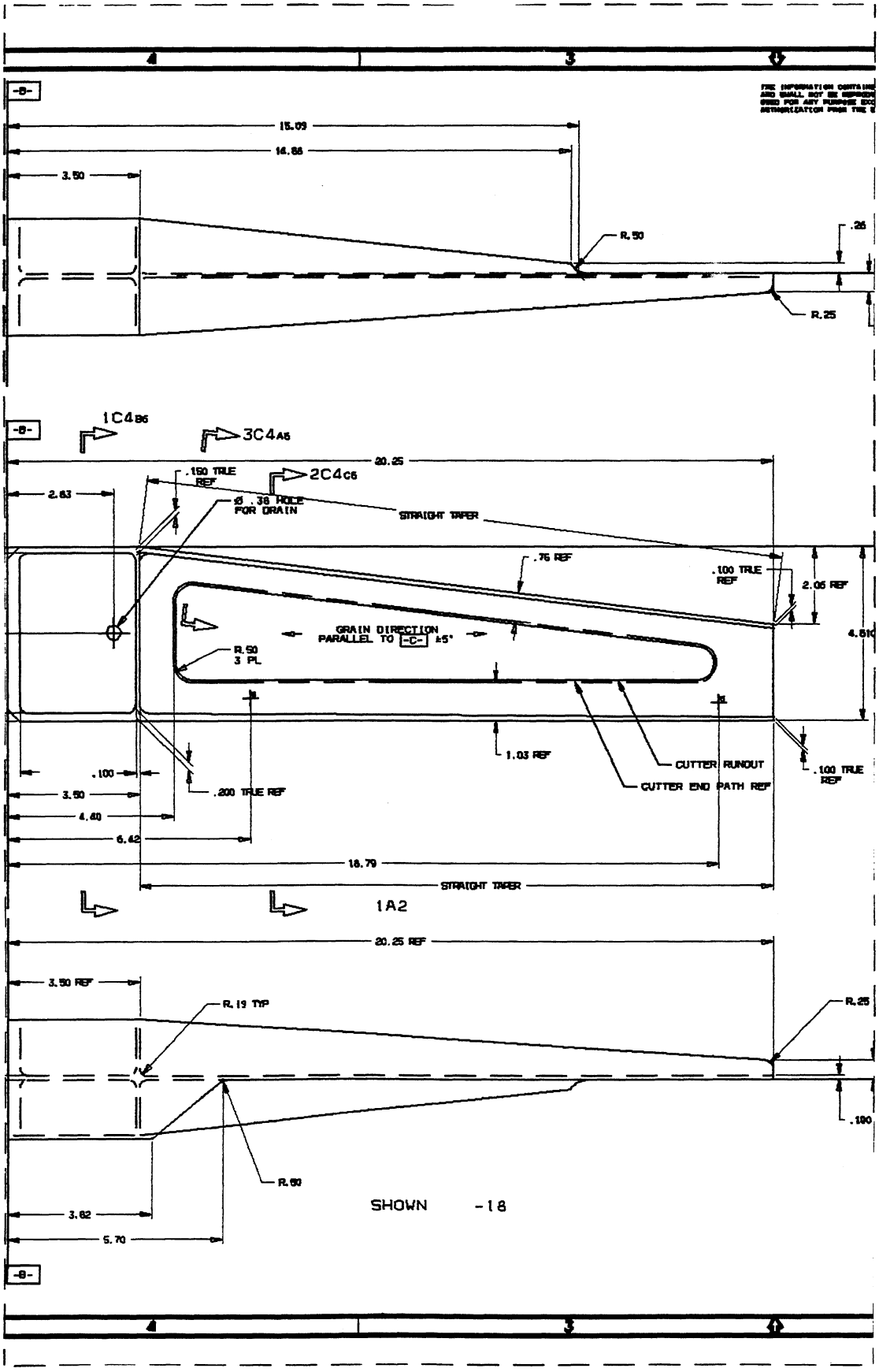
15.09
14.86
3.50
R.50
.25
R.25
1C4B6
3C4A6
20.25
.150 TRUE REF
2C4C6
2.63
ø .38 HOLE FOR DRAIN
STRAIGHT TAPER
.76 REF
.100 TRUE REF
2.05 REF
GRAIN DIRECTION PARALLEL TO -C- ±5°
R.50 3 PL
1.03 REF
CUTTER RUNOUT
CUTTER END PATH REF
.100 TRUE REF
.100
3.50
4.40
6.42
.200 TRUE REF
18.79
STRAIGHT TAPER
1A2
20.25 REF
3.50 REF
R.19 TYP
R.25
.100
R.50
3.62
5.70
SHOWN -18

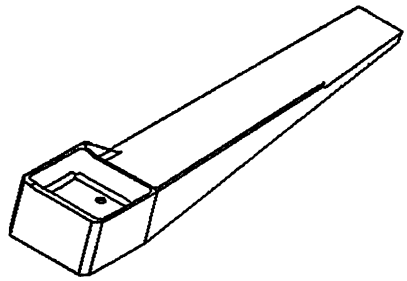

3D VIEW
ENGINEERING REF
SCALE: NONE

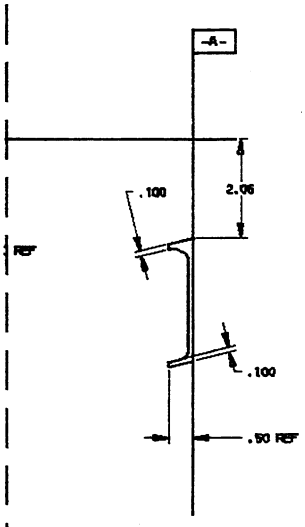

.90

.50

1A2B3

DECIMALS TOLERANCES
.XX ±.03
.XXX ±.010

TEST ONLY

BOEING
COMPOSITE SANDWICH
SIDE PANEL - ASSY
(TEST ONLY)

J 81206 261X0413

261X0413

D-80

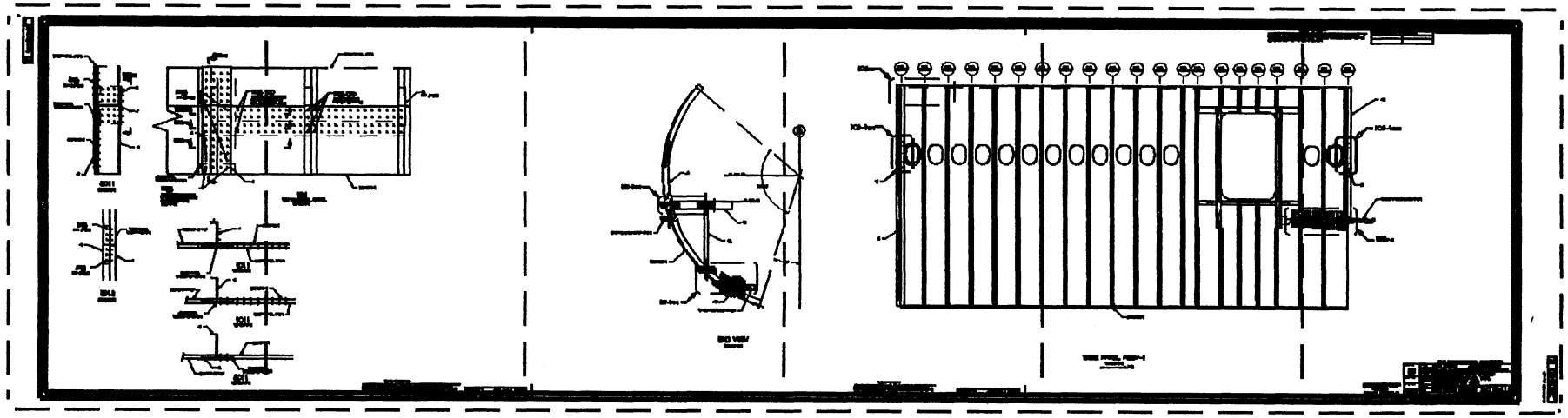

D-81 D-82 D-83 D-84 D-85 D-86

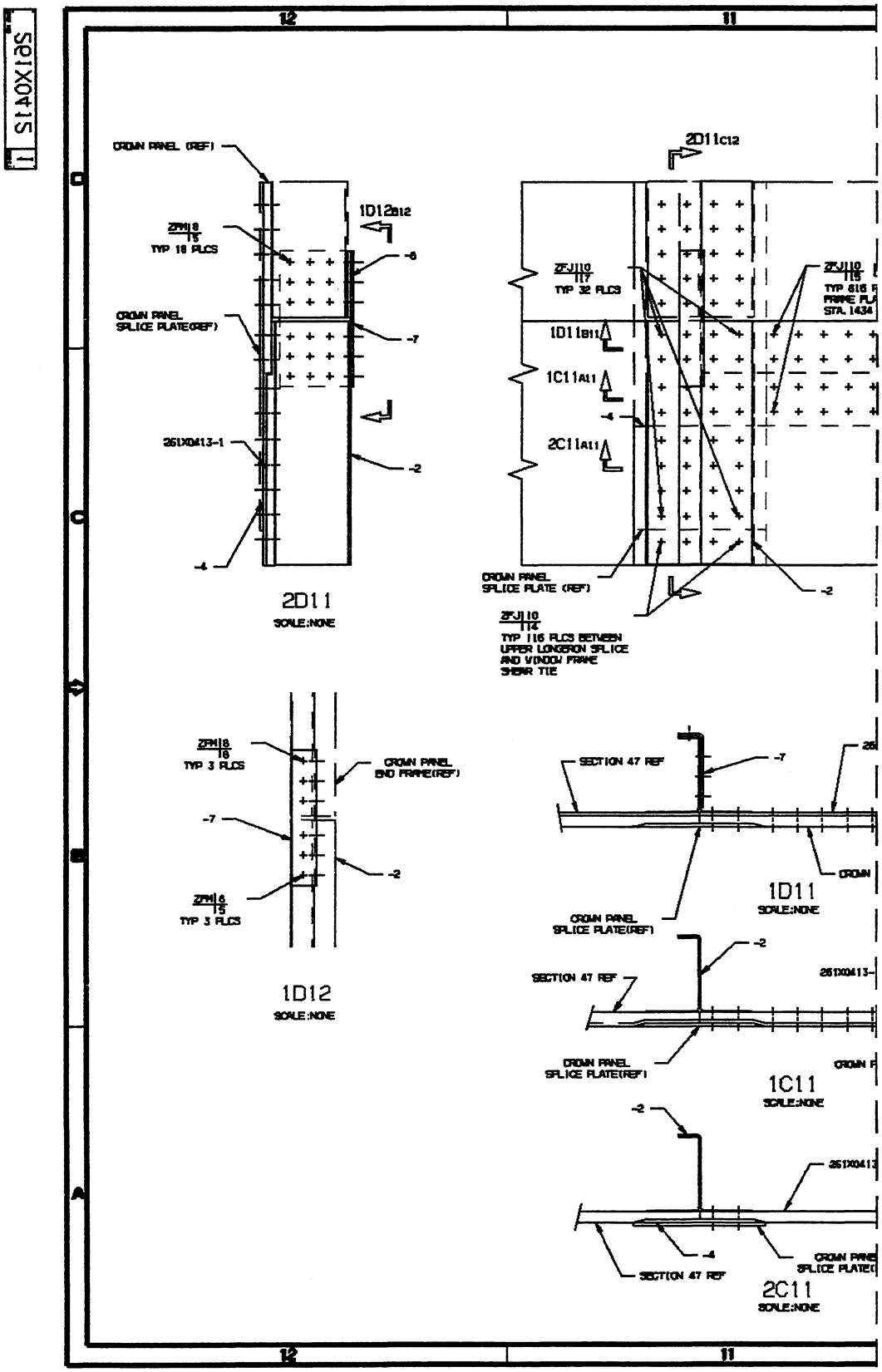

CROWN PANEL (REF)
ZFM 8/15 TYP 18 PLCS
CROWN PANEL SPLICE PLATE(REF)
261X0413-1
1D12B12
-6
-7
-2
-4
2D11
SCALE:NONE
2D11C12
ZFJ 10/117 TYP 32 PLCS
1D11B11
1C11A11
2C11A11
CROWN PANEL SPLICE PLATE (REF)
ZFJ 10/114 TYP 116 PLCS BETWEEN UPPER LONGERON SPLICE AND WINDOW FRAME SHEAR TIE
ZFM 8/16 TYP 3 PLCS
CROWN PANEL END FRAME(REF)
ZFM 6/15 TYP 3 PLCS
1D12
SCALE:NONE
SECTION 47 REF
CROWN PANEL SPLICE PLATE(REF)
1D11
SCALE:NONE
1C11
SCALE:NONE
2C11
SCALE:NONE

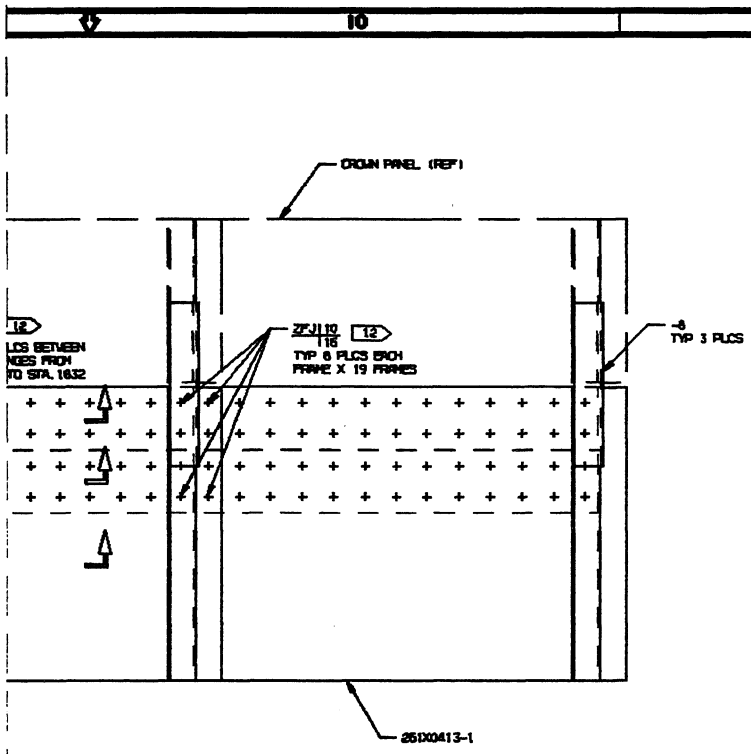

1D6
VIEW TAKEN NORMAL TO PANEL
SCALE:NONE

X0413-1

ANEL (REF)

NEL (REF)

-1

EF)

BOEING PROPRIETARY
THE INFORMATION CONTAINED HEREIN IS PROPRIETARY TO THE BOEING COMPANY AND SHALL NOT BE REPRODUCED OR DISCLOSED IN WHOLE OR IN PART OR USED FOR ANY PURPOSE EXCEPT WHEN SUCH USE POSSESSES DIRECT WRITTEN AUTHORIZATION FROM THE BOEING COMPANY.

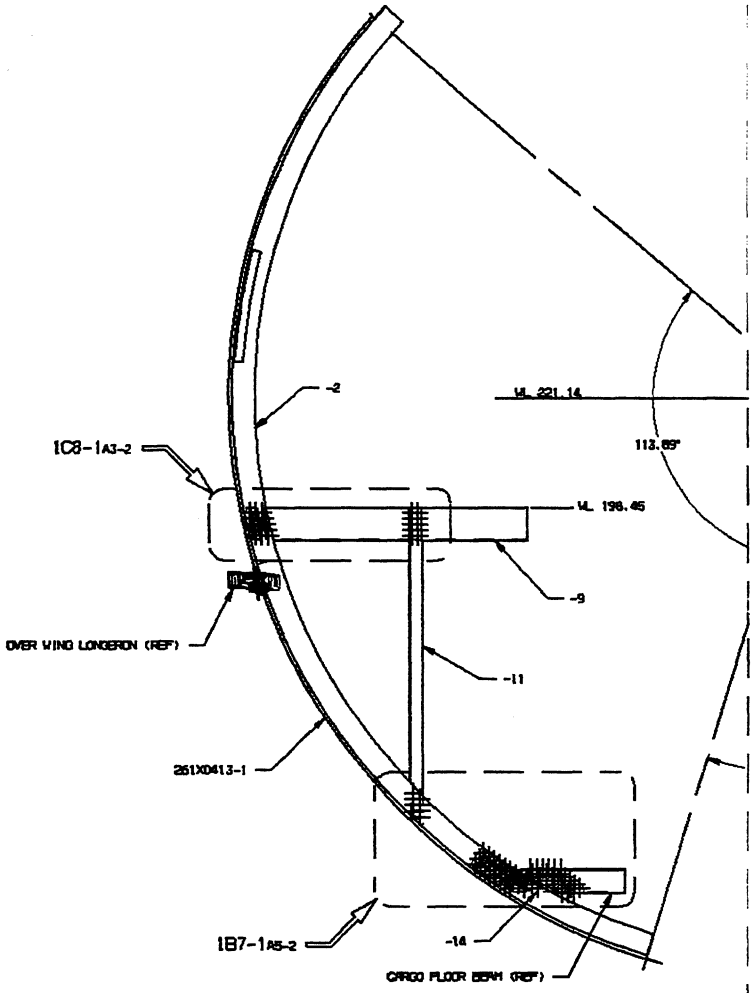

END VIEW
SCALE:NONE

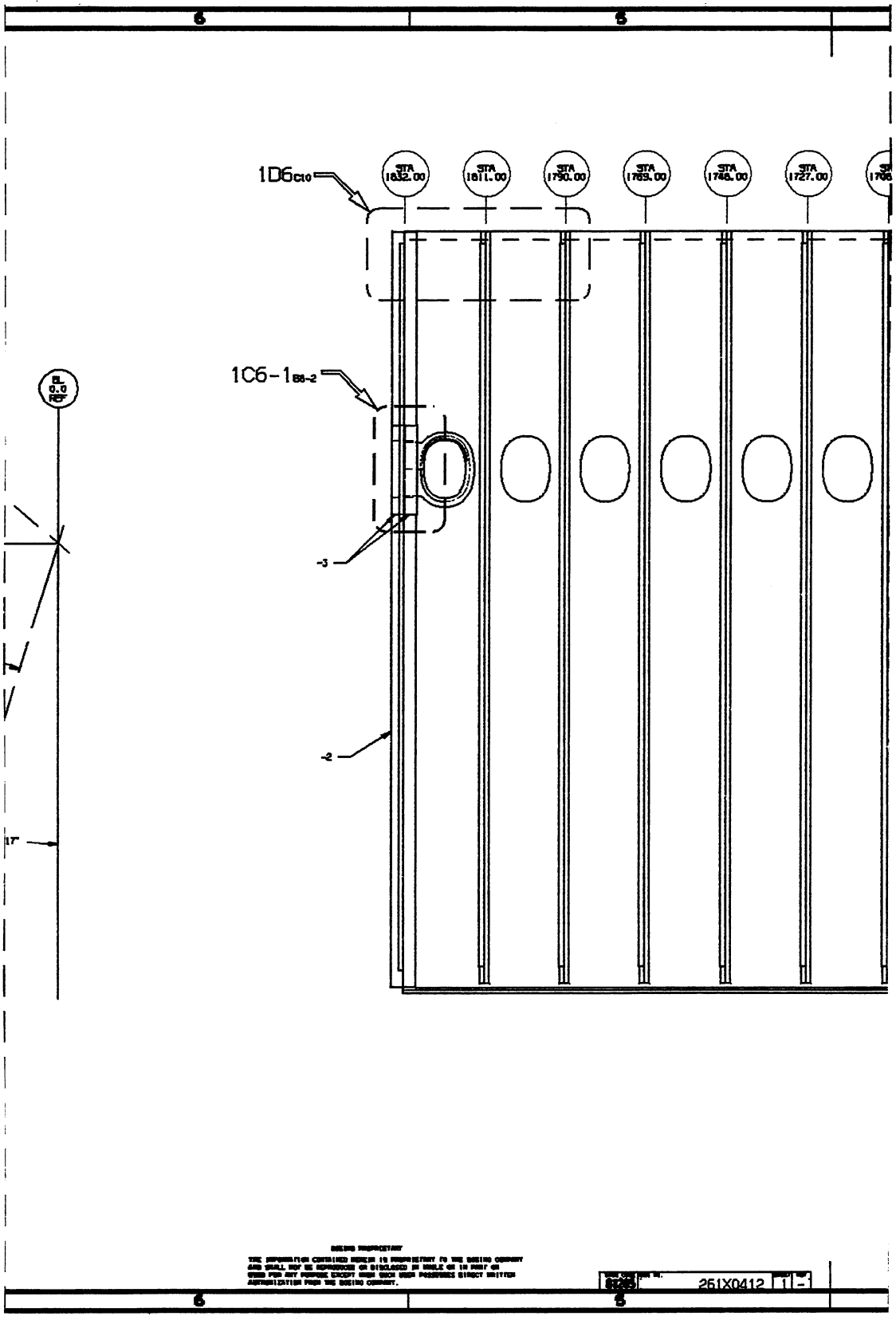
6
5
1D6C10
STA 1832.00
STA 1811.00
STA 1790.00
STA 1769.00
STA 1748.00
STA 1727.00
1C6-1B6-2
-3
-2
BL 0.0 REF
17°
261X0412

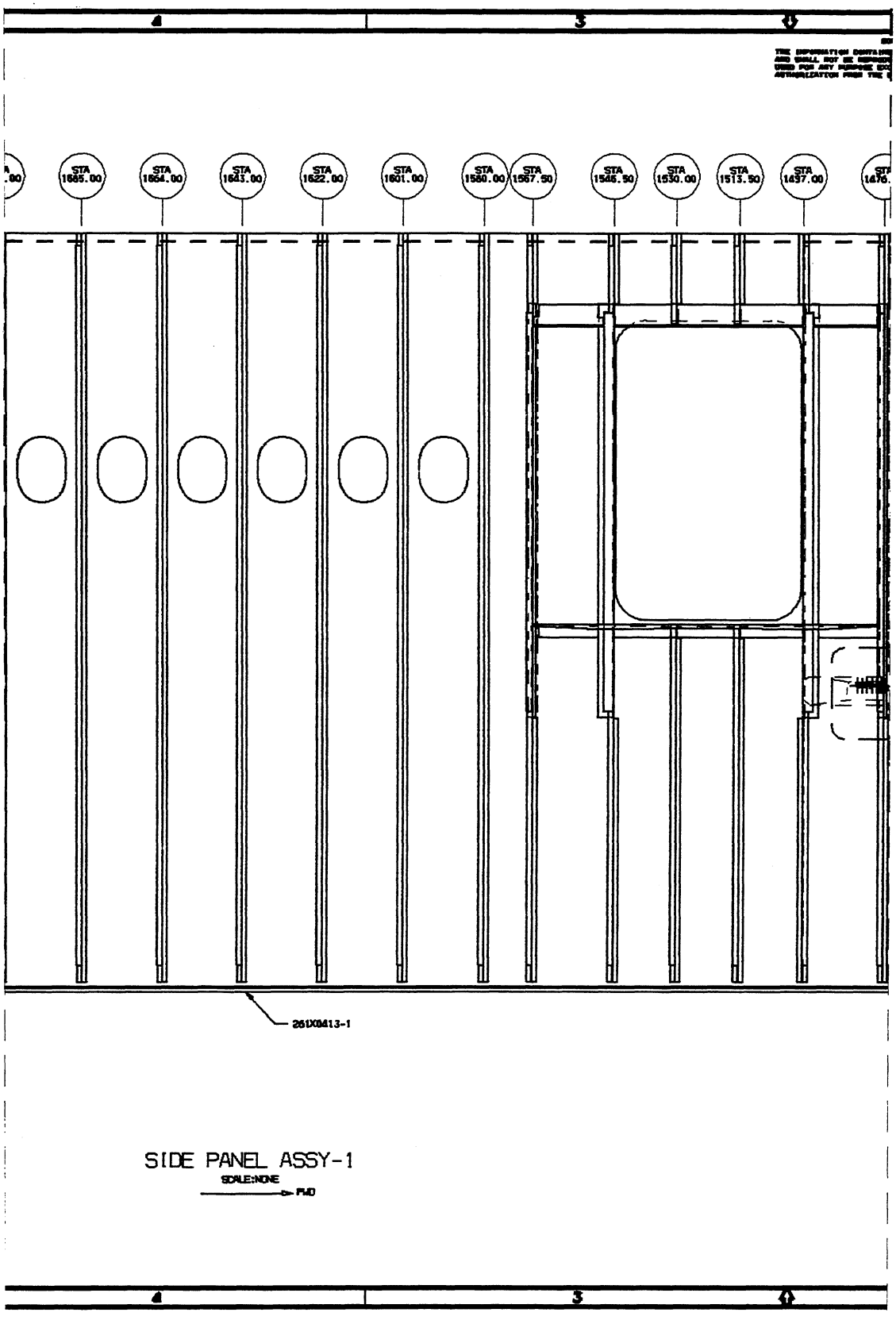

SIDE PANEL ASSY-1

SCALE:NONE

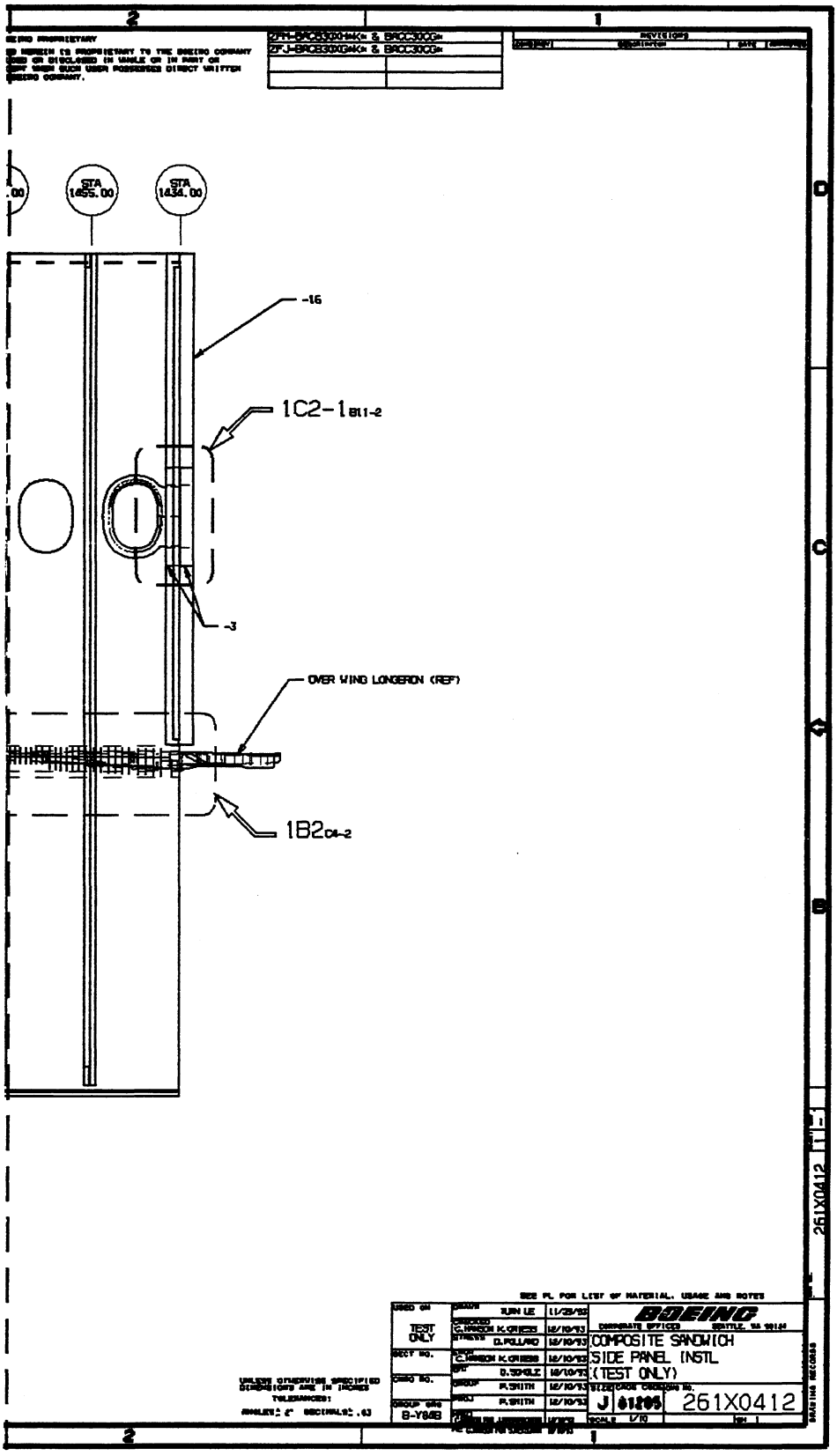
STA 1455.00
STA 1434.00
-16
1C2-1 B11-2
-3
OVER WING LONGERON (REF)
1B2 C4-2
BOEING
COMPOSITE SANDWICH
SIDE PANEL INSTL
(TEST ONLY)
261X0412

D-87

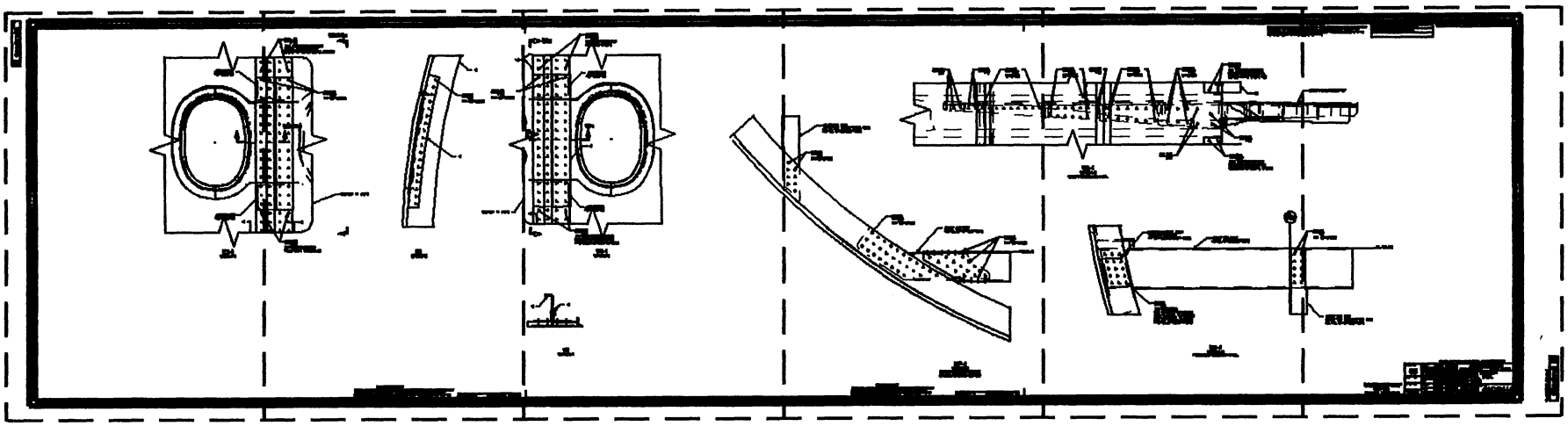

D-88 D-89 D-90 D-91 D-92 D-93

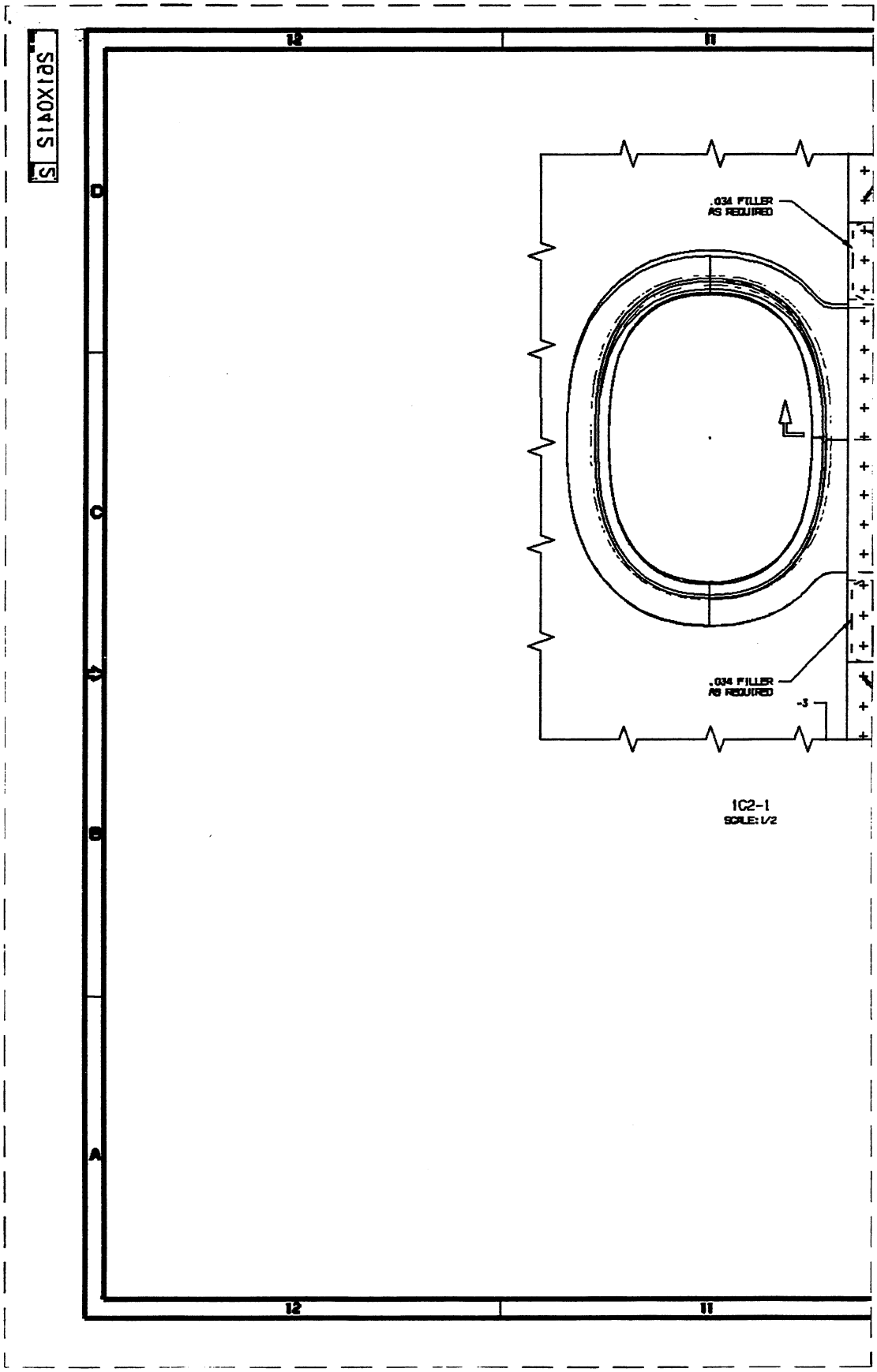
SIAOXIAS
12
11
D
C
B
A
.034 FILLER
AS REQUIRED
.034 FILLER
AS REQUIRED
-3
1C2-1
SCALE: 1/2

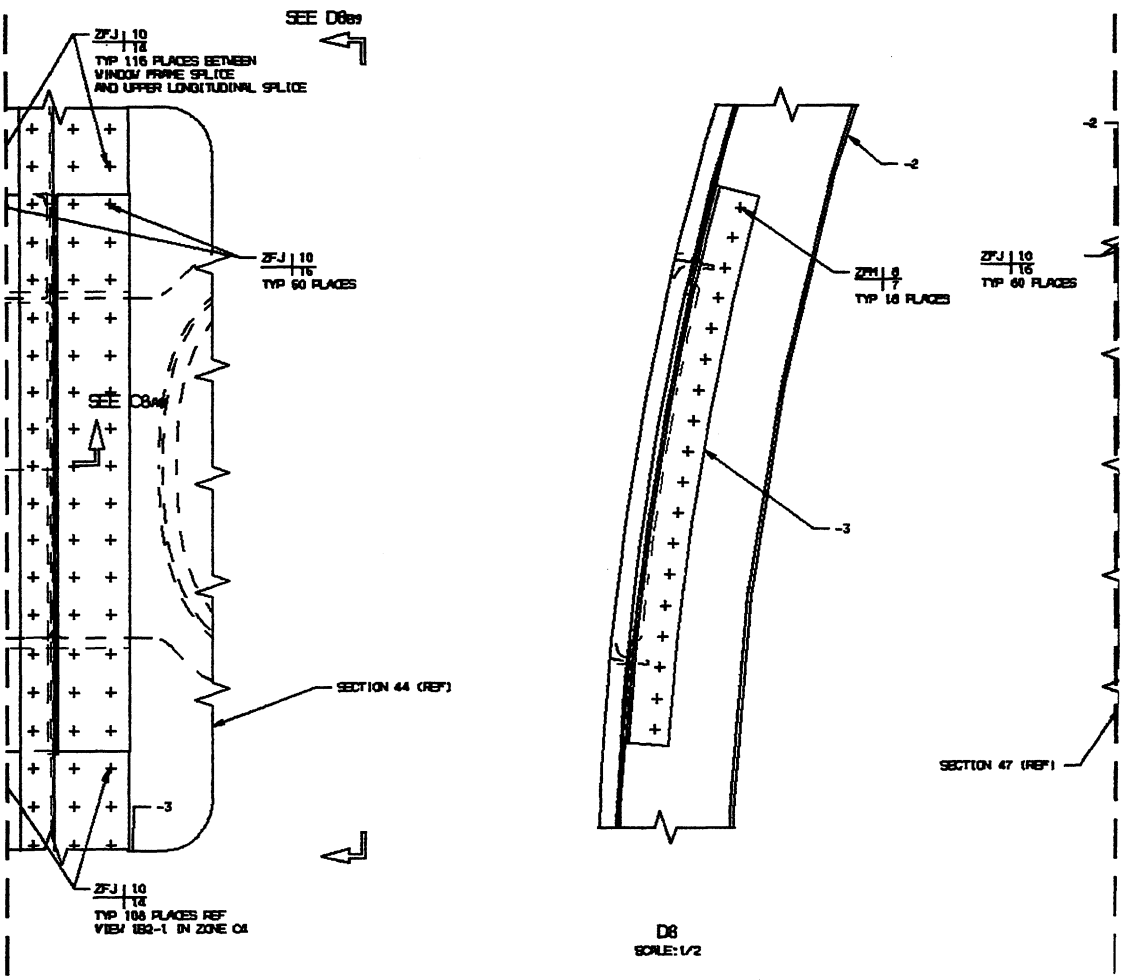

D8
SCALE: 1/2

BOEING PROPRIETARY
THE INFORMATION CONTAINED HEREIN IS PROPRIETARY TO THE BOEING COMPANY AND SHALL NOT BE REPRODUCED OR DISCLOSED IN WHOLE OR IN PART OR USED FOR ANY PURPOSE EXCEPT WHEN SUCH USE PERMITTED BY WRITTEN AUTHORIZATION FROM THE BOEING COMPANY.

261X0412 2 -1

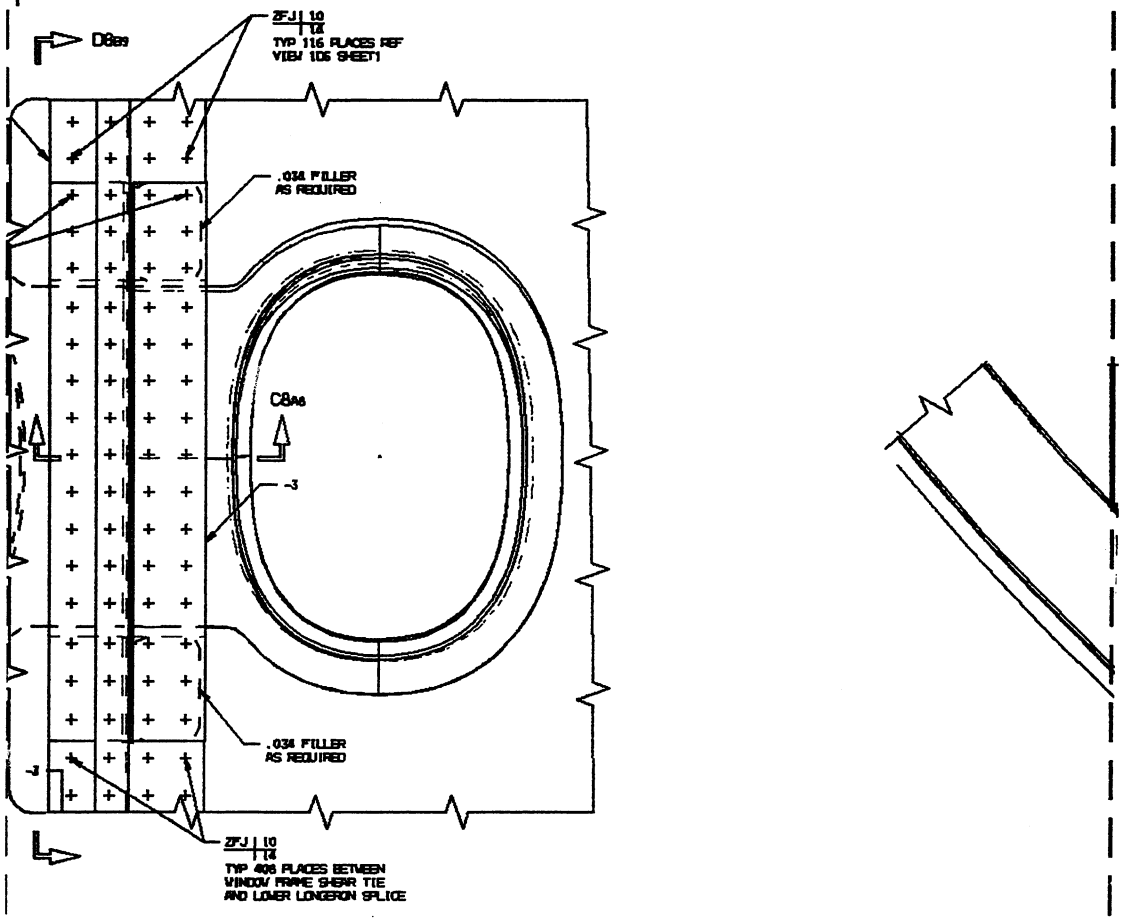

1C6-1
SCALE: 1/2

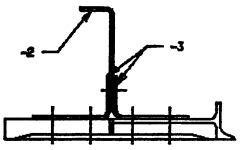

C8
SCALE: 1/1

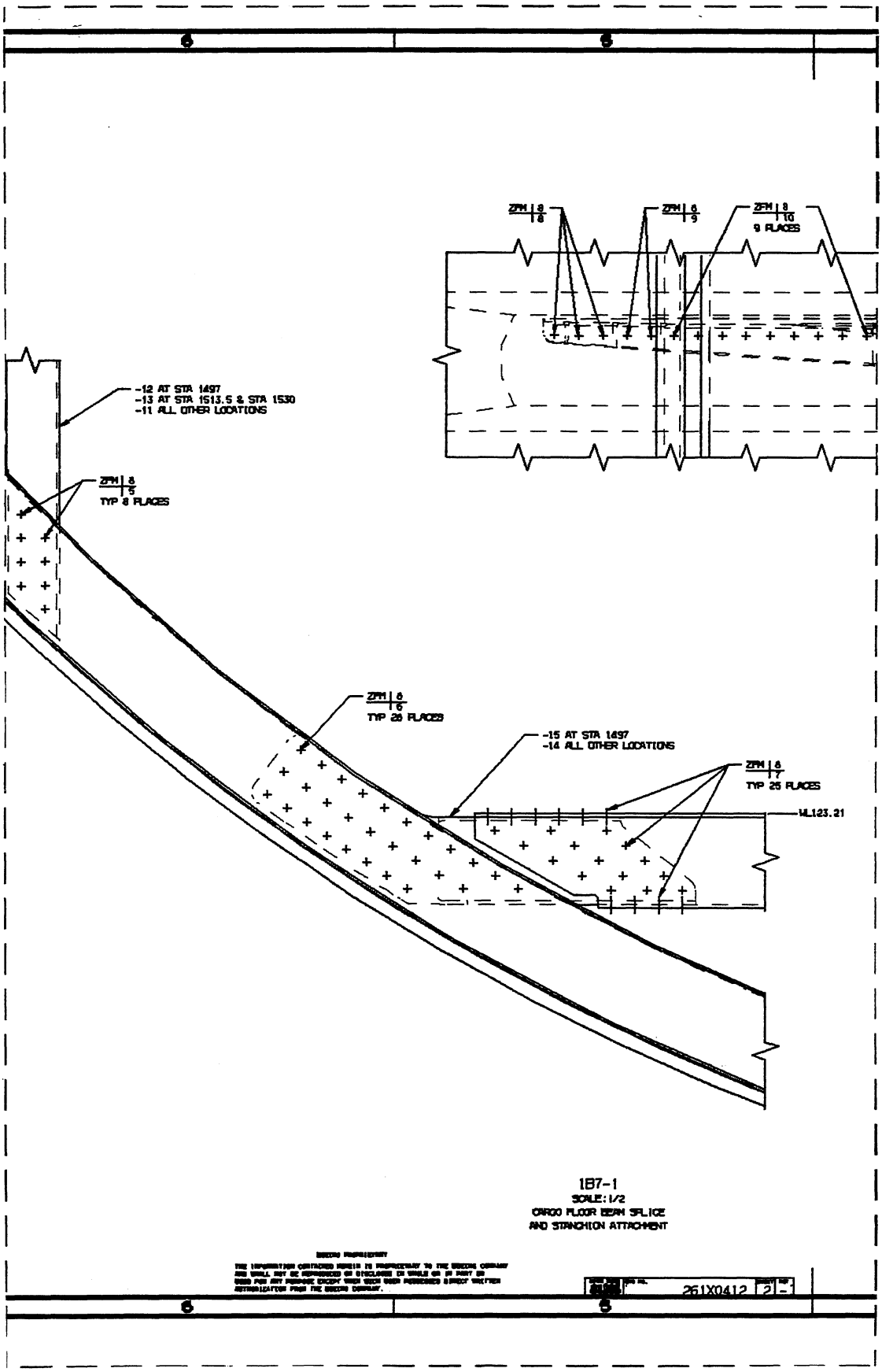

1B7-1
SCALE: 1/2
CARGO FLOOR BEAM SPLICE
AND STANCHION ATTACHMENT

BOEING PROPRIETARY
THE INFORMATION CONTAINED HEREIN IS PROPRIETARY TO THE BOEING COMPANY AND SHALL NOT BE REPRODUCED OR DISCLOSED IN WHOLE OR IN PART OR USED FOR ANY PURPOSE EXCEPT WHEN SUCH USE HAS BEEN PURSUANT TO A DIRECT WRITTEN AUTHORIZATION FROM THE BOEING COMPANY.

261X0412 2 -

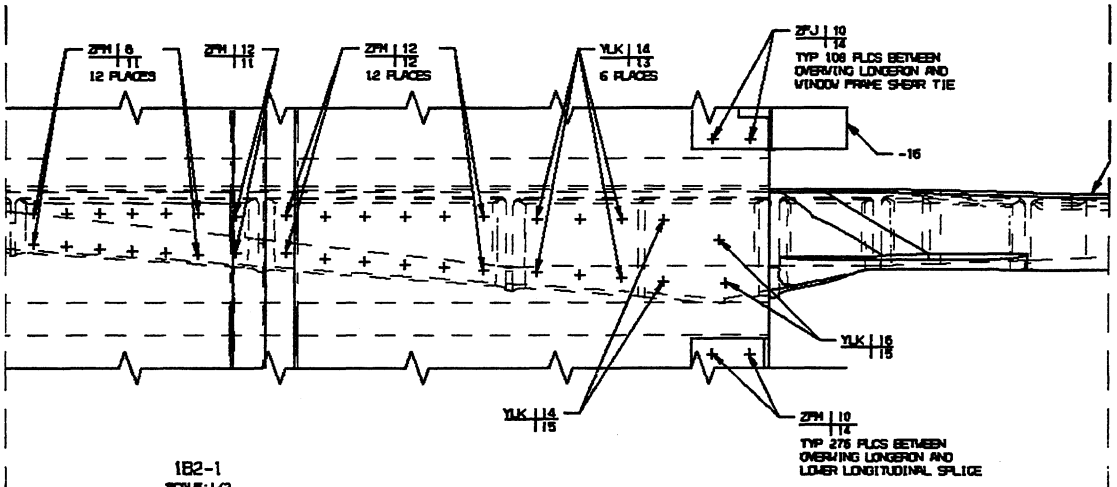

1B2-1
SCALE: 1/2
OVERWING LONGERON INSTL

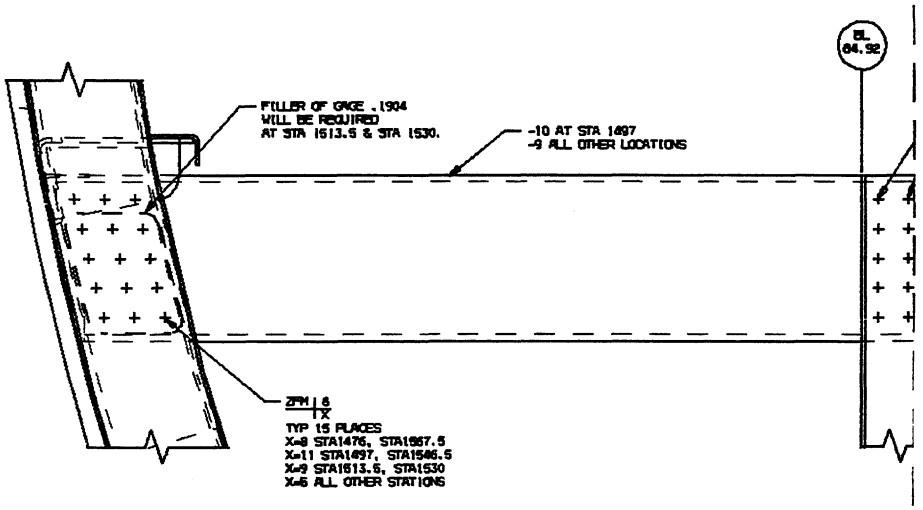

1C8-1
SCALE: 1/2
PASSENGER FLOOR BEAM INSTL

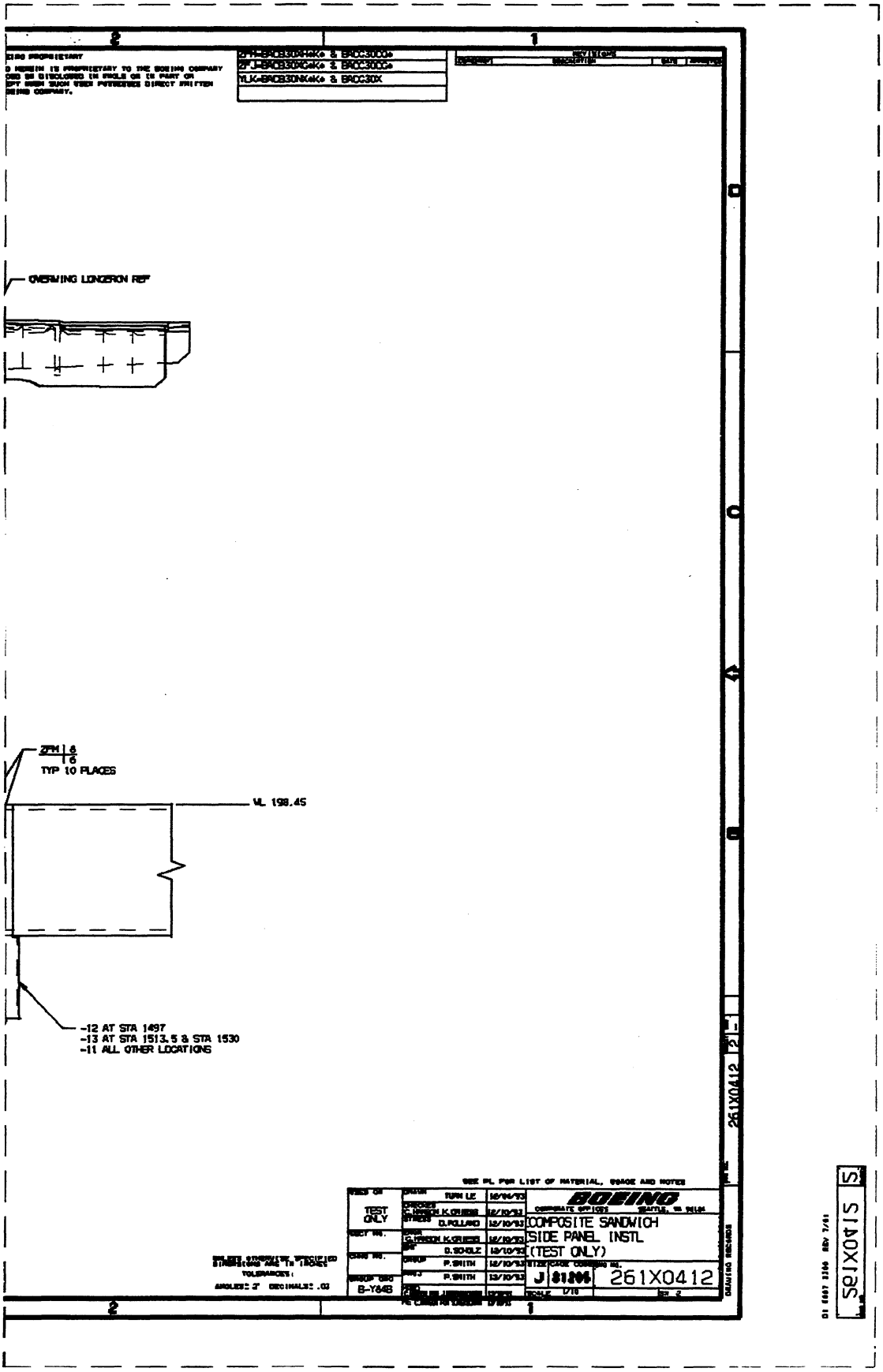
OVERWING LONGERON REF
2FM 8
6
TYP 10 PLACES
WL 198.45
-12 AT STA 1497
-13 AT STA 1513.5 & STA 1530
-11 ALL OTHER LOCATIONS
TEST ONLY
B-Y84B
BOEING
COMPOSITE SANDWICH
SIDE PANEL INSTL
(TEST ONLY)
261X0412
261X0412

D-94

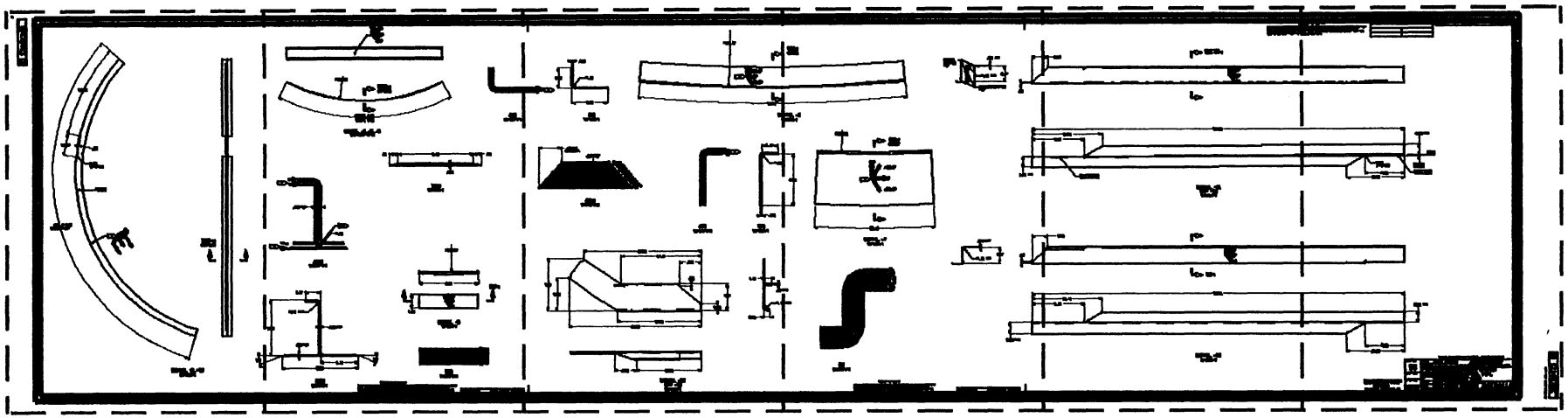

D-95 D-96 D-97 D-98 D-99 D-100

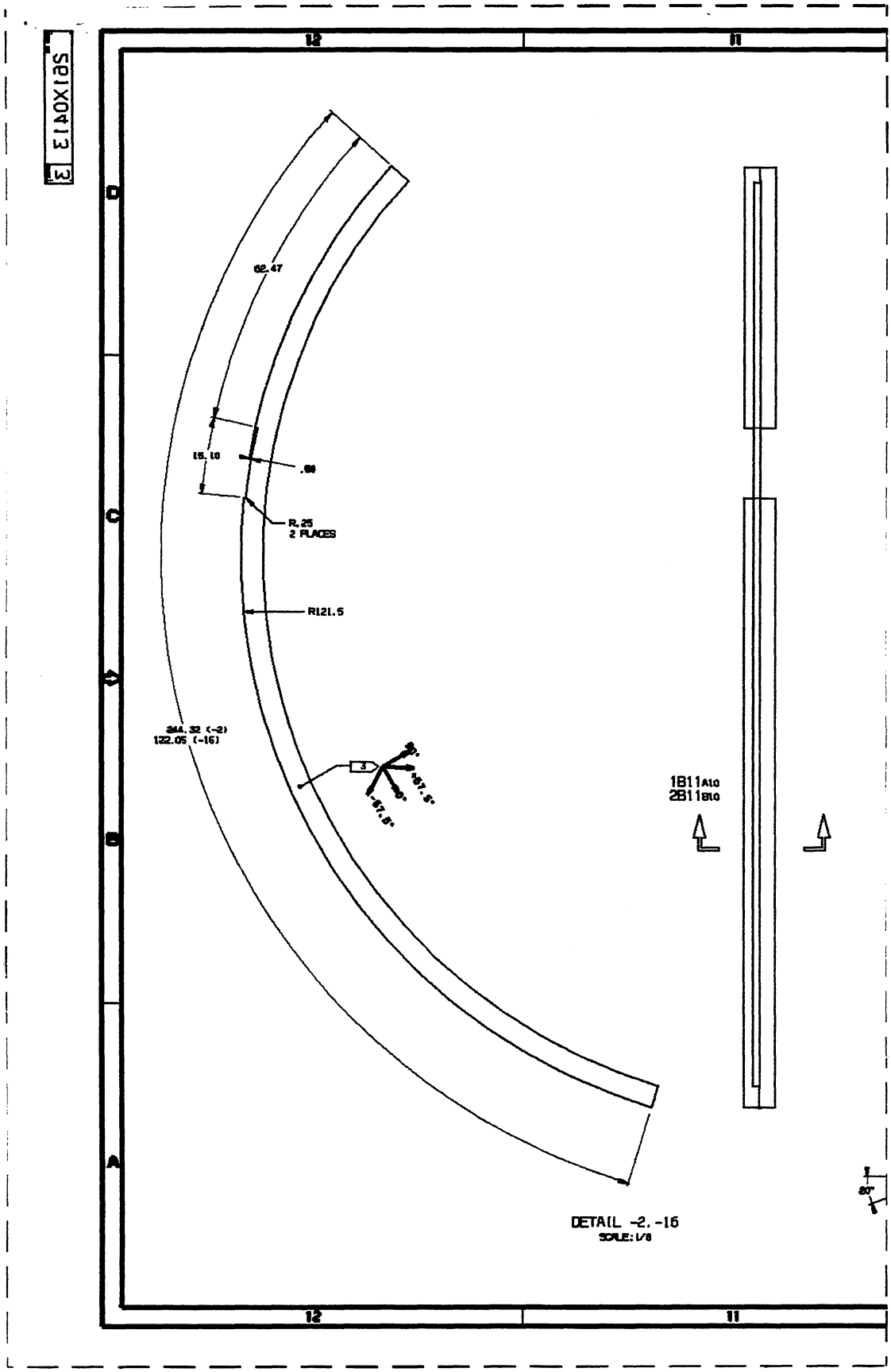

12
11
D
C
B
A
62.47
15.10
R.25
2 PLACES
R121.5
244.32 (-2)
122.05 (-16)
1B11A10
2B11B10
DETAIL -2, -16
SCALE: 1/8

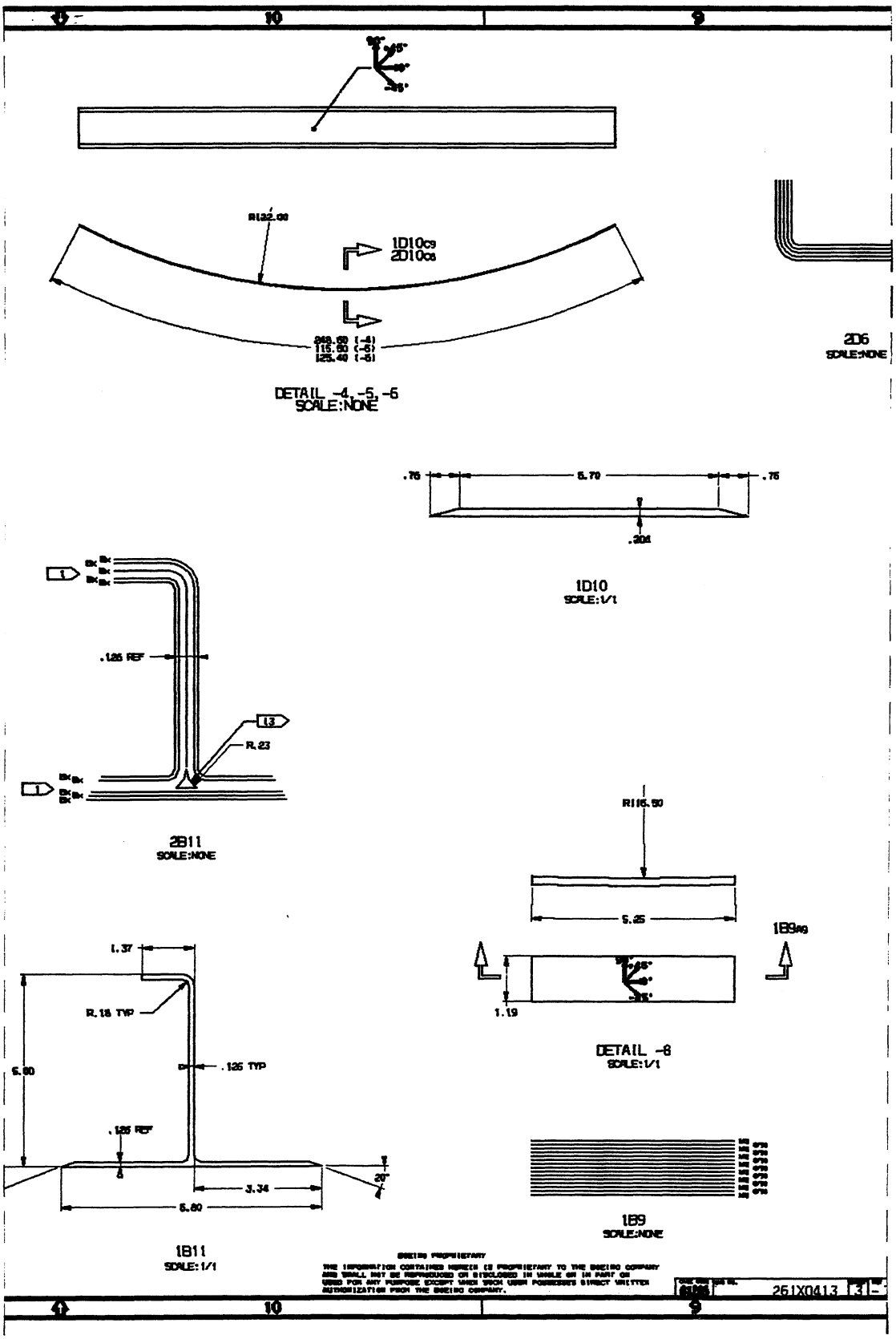
10
9
R132.00
1D10c9
2D10c8
DETAIL -4, -5, -6
SCALE:NONE
2D6
SCALE:NONE
.75
5.70
.75
.204
1D10
SCALE:1/1
.125 REF
L3
R.23
2B11
SCALE:NONE
R116.60
5.25
1B9A9
1.19
DETAIL -8
SCALE:1/1
1.37
R.18 TYP
6.80
.125 TYP
.125 REF
20°
3.34
5.80
1B11
SCALE:1/1
1B9
SCALE:NONE
BOEING PROPRIETARY
THE INFORMATION CONTAINED HEREIN IS PROPRIETARY TO THE BOEING COMPANY AND SHALL NOT BE REPRODUCED OR DISCLOSED IN WHOLE OR IN PART OR USED FOR ANY PURPOSE EXCEPT UNDER WHICH USER POSSESSES DIRECT WRITTEN AUTHORIZATION FROM THE BOEING COMPANY.
261X0413
3
10
9

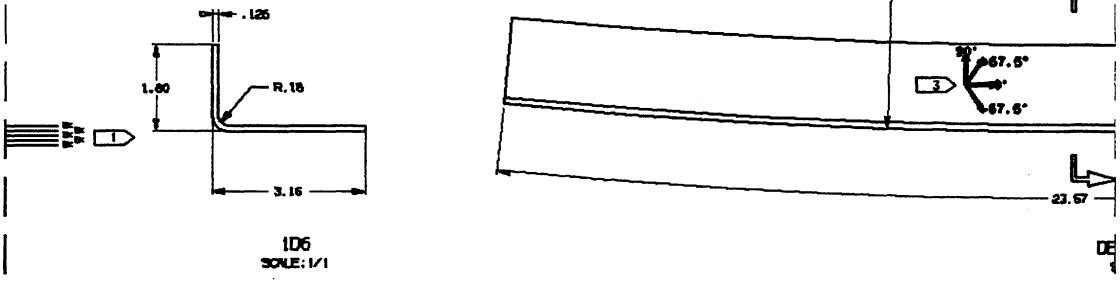

1D6
SCALE: 1/1

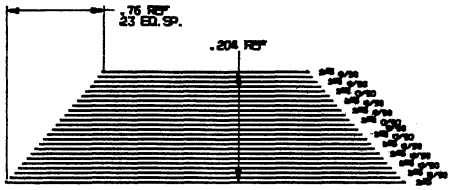

2D10
SCALE:NONE

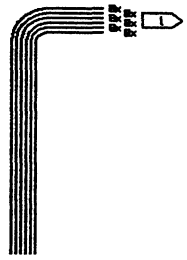

2D6
SCALE:NONE

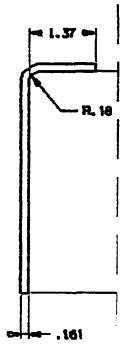

1C6
SCALE: 1/1

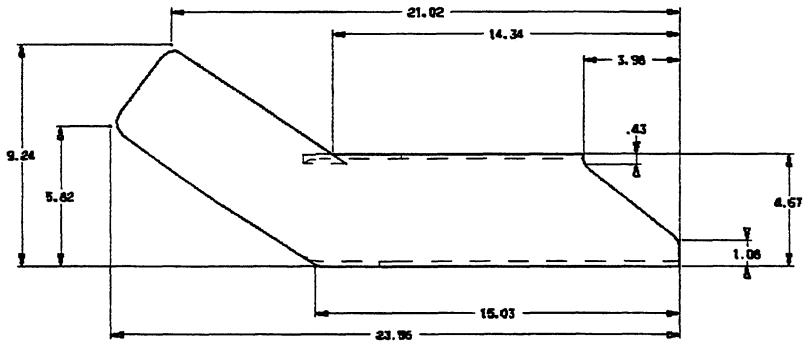

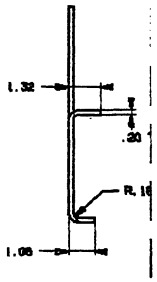

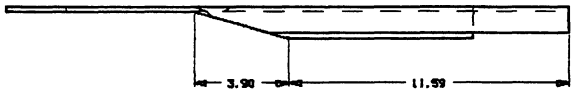

DETAIL -14
OPP -15
SCALE: 1/2

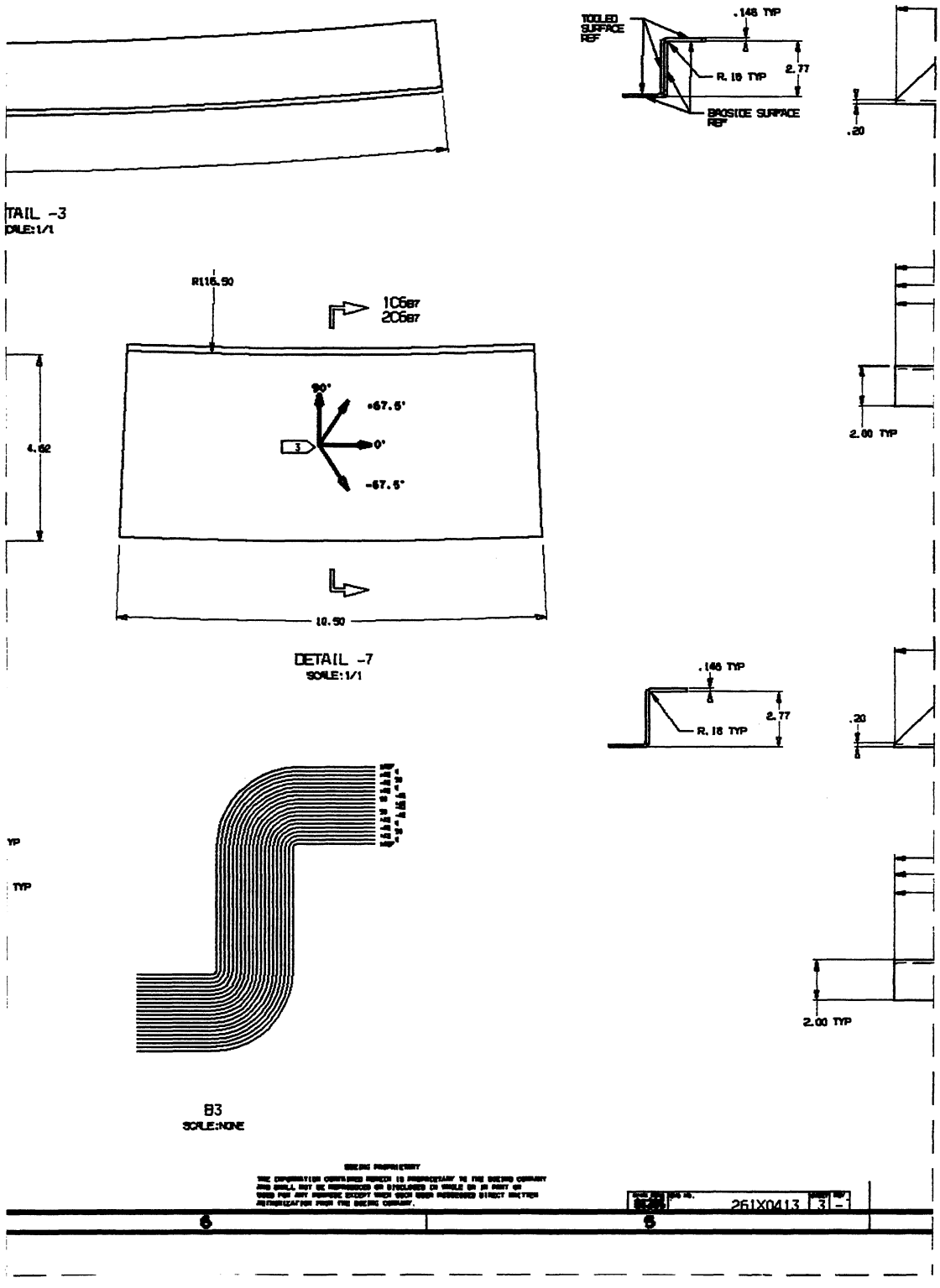
106c8
206c9
TOOLED SURFACE REF
.148 TYP
R.18 TYP
2.77
BROSIDE SURFACE REF
.20
TAIL -3
SCALE:1/1
R116.50
106e7
206e7
90°
+67.5°
0°
-67.5°
3
4.62
10.50
2.00 TYP
DETAIL -7
SCALE:1/1
.148 TYP
R.18 TYP
2.77
.20
YP
TYP
2.00 TYP
B3
SCALE:NONE
261X0413
3

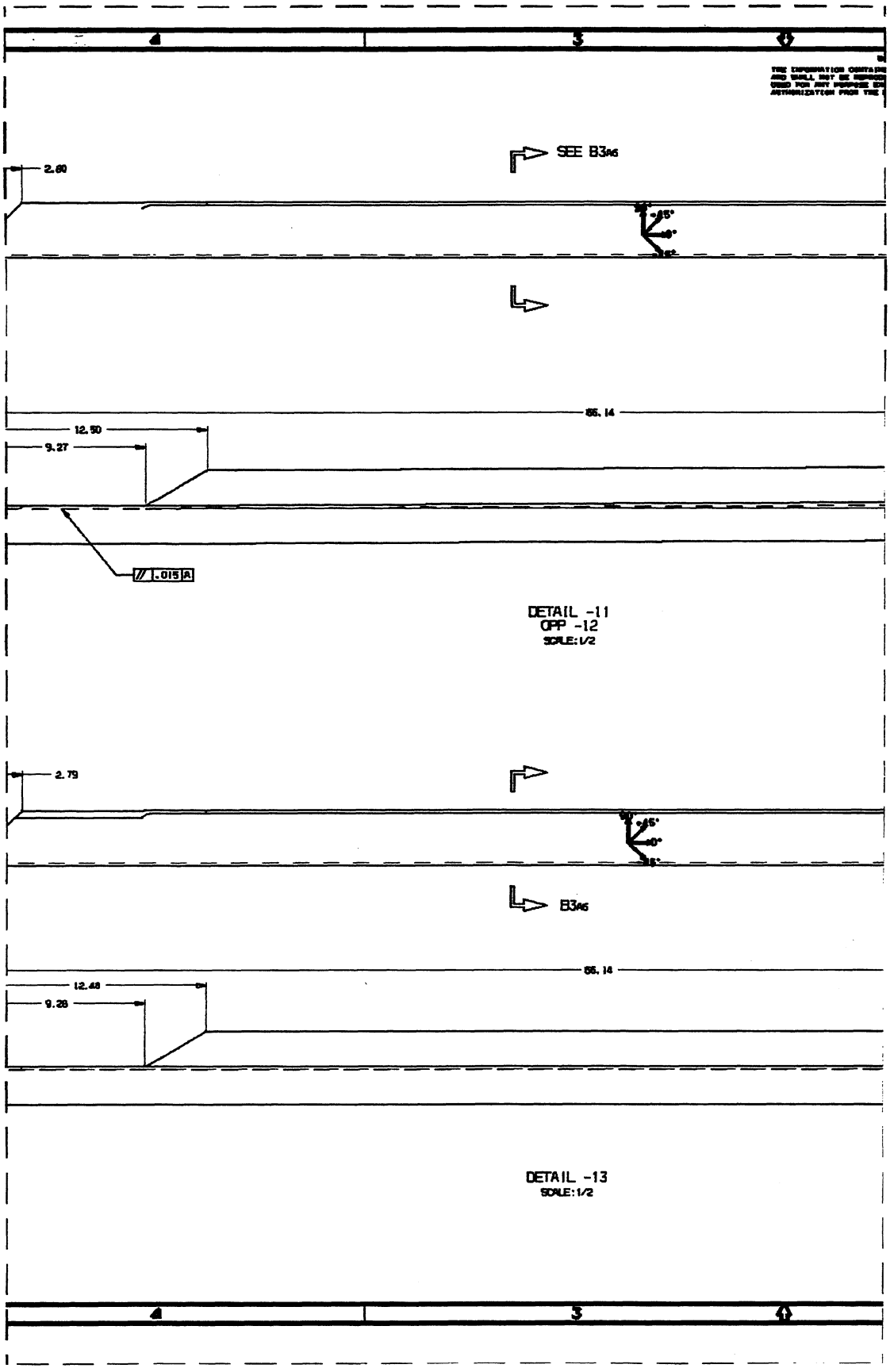
SEE B3A6
2.80
45°
0°
55.14
12.50
9.27
.015 A
DETAIL -11
OPP -12
SCALE:1/2
2.79
45°
0°
B3A6
55.14
12.48
9.28
DETAIL -13
SCALE:1/2

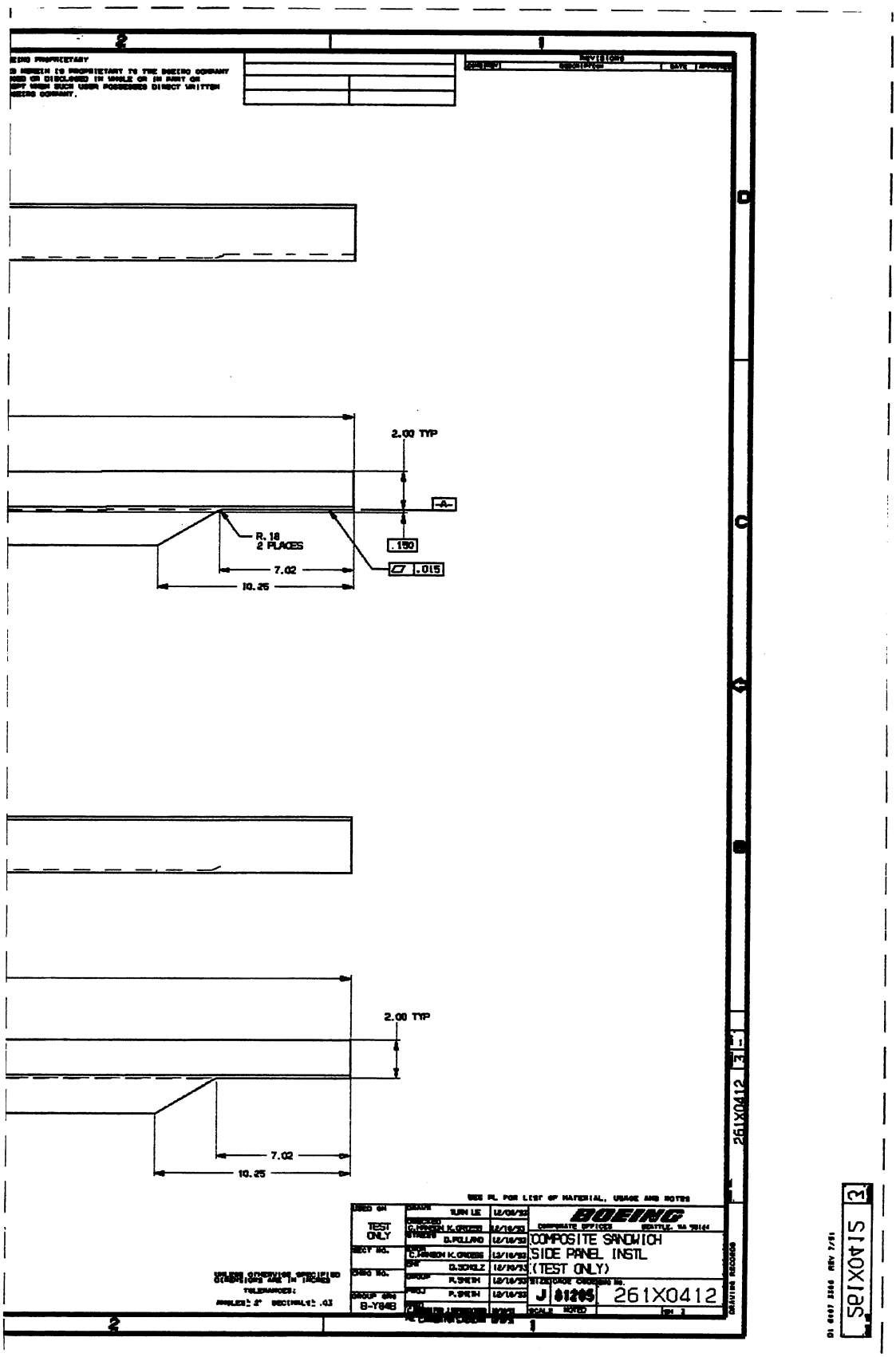
2.00 TYP
-A-
R. 18
2 PLACES
.150
.015
7.02
10.25
2.00 TYP
7.02
10.25
BOEING
COMPOSITE SANDWICH
SIDE PANEL INSTL
(TEST ONLY)
TEST ONLY
261X0412
261X0412
3

D-101

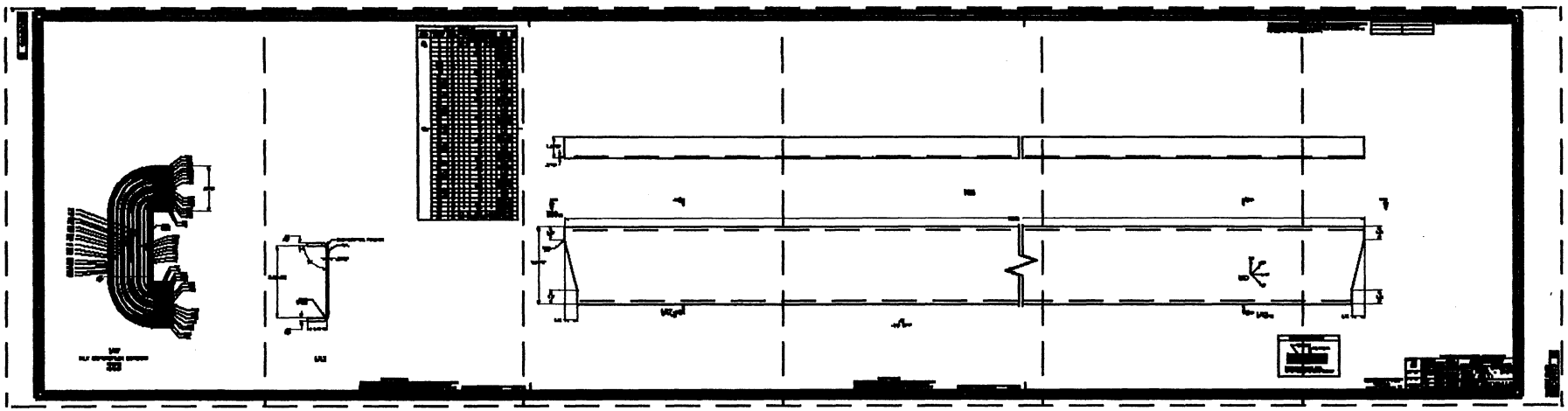

D-102 D-103 D-104 D-105 D-106 D-107

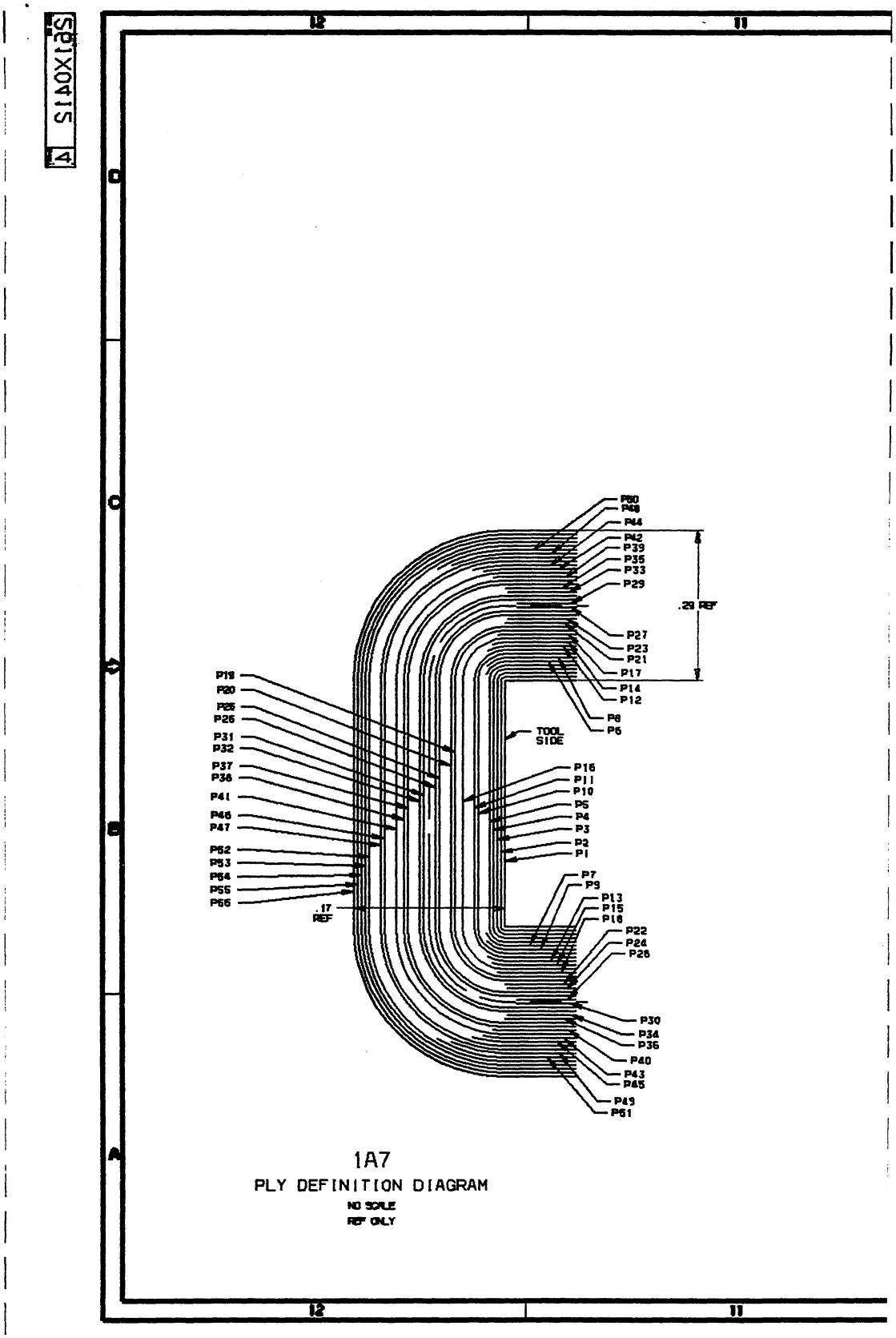

1A7

PLY DEFINITION DIAGRAM

NO SCALE

REF ONLY

PLY TABLE

PART NUMBER	PLY (P) OR PART NO.	PLY F-FILL P-PARTIAL	MATERIAL	TAPE FIBER OR FABRIC WARP ORIENTATION	DRAWING SPLICE CONTROL	PLY WIDTH	[illegible]
-9, -10	1	F	9	0° OR 90°	10	9.50 MIN	
	2	F	4	+45°	10	9.53 MIN	
	3	F		90°		9.56 MIN	
	4	F		-45°		9.59 MIN	
	5	F		0°		9.62 MIN	
	6,7	P		0°		1.87	
	8,9	P		0°		1.82	
	10	F		+45°		9.86 MIN	
	11	F		0°		9.89 MIN	
	12,13	P		0°		1.75	
	14,15	P		0°		1.70	
	16	F		-45°		9.72 MIN	
	17,18	P		90°		1.67	
	19	F		+45°		9.75 MIN	
	20	F		0°		9.78 MIN	
	21,22	P		0°		1.63	
	23,24	P		0°		1.55	
	25	F		-45°		9.81 MIN	
	26	F		0°		9.84 MIN	
	27,28	P		0°		1.51	
CL	29,30	P		0°		1.51	
	31	F		0°		9.87 MIN	
	32	F		-45°		9.90 MIN	
	33,34	P		0°		1.58	
	35,36	P		0°		1.70	
	37	F		0°		9.93 MIN	
	38	F		+45°		9.97 MIN	
	39,40	P		90°		1.75	
	41	F		-45°		9.99 MIN	
	42,43	P		0°		1.82	
	44,45	P		0°		1.87	
	46	F		0°		10.03 MIN	
	47	F		+45°		10.06 MIN	
	48,49	P		0°		1.99	
	50,51	P		0°		2.06	
	52	F		0°		10.09 MIN	
	53	F		-45		10.12 MIN	
	54	F		90°		10.15 MIN	
	55	F	4	+45°	10	10.18 MIN	
	56	F	9	0° OR 90°	10	10.21 MIN	

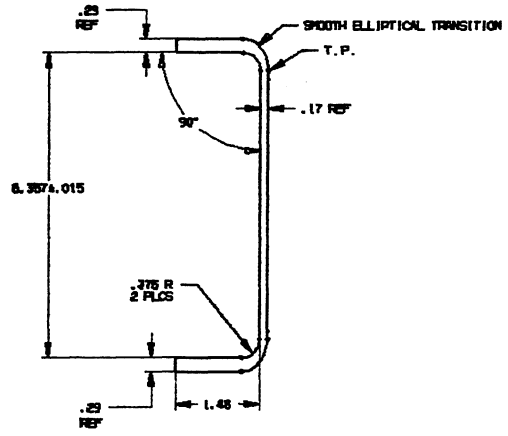

1A3

BOEING PROPRIETARY
THE INFORMATION CONTAINED HEREIN IS PROPRIETARY TO THE BOEING COMPANY AND SHALL NOT BE REPRODUCED OR DISCLOSED IN WHOLE OR IN PART OR USED FOR ANY PURPOSE EXCEPT WHEN SUCH USER POSSESSES DIRECT WRITTEN AUTHORIZATION FROM THE BOEING COMPANY.

261X0412

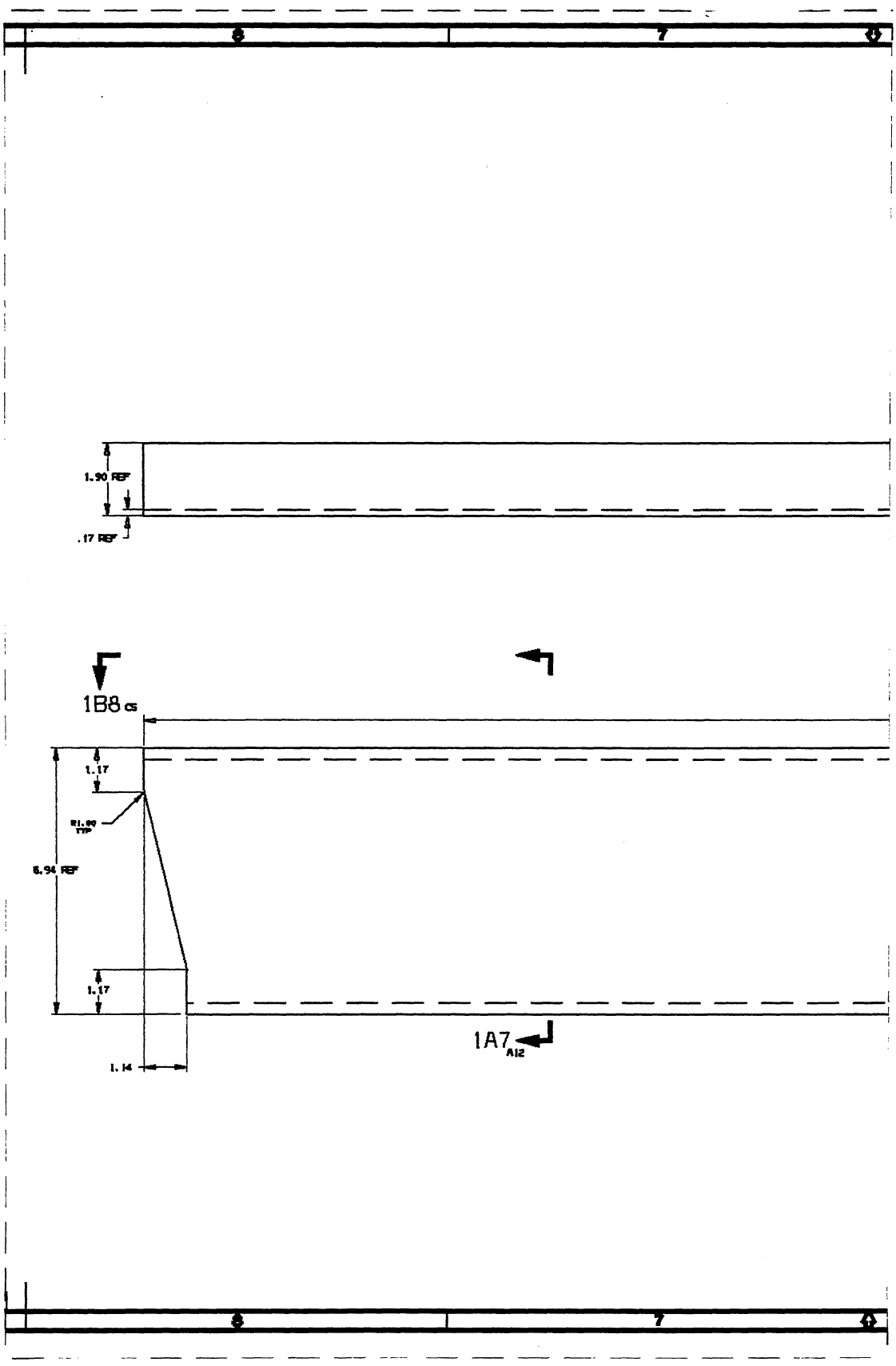
1.90 REF
.17 REF
1B8 CS
1.17
6.94 REF
1.17
1.14
1A7
A12

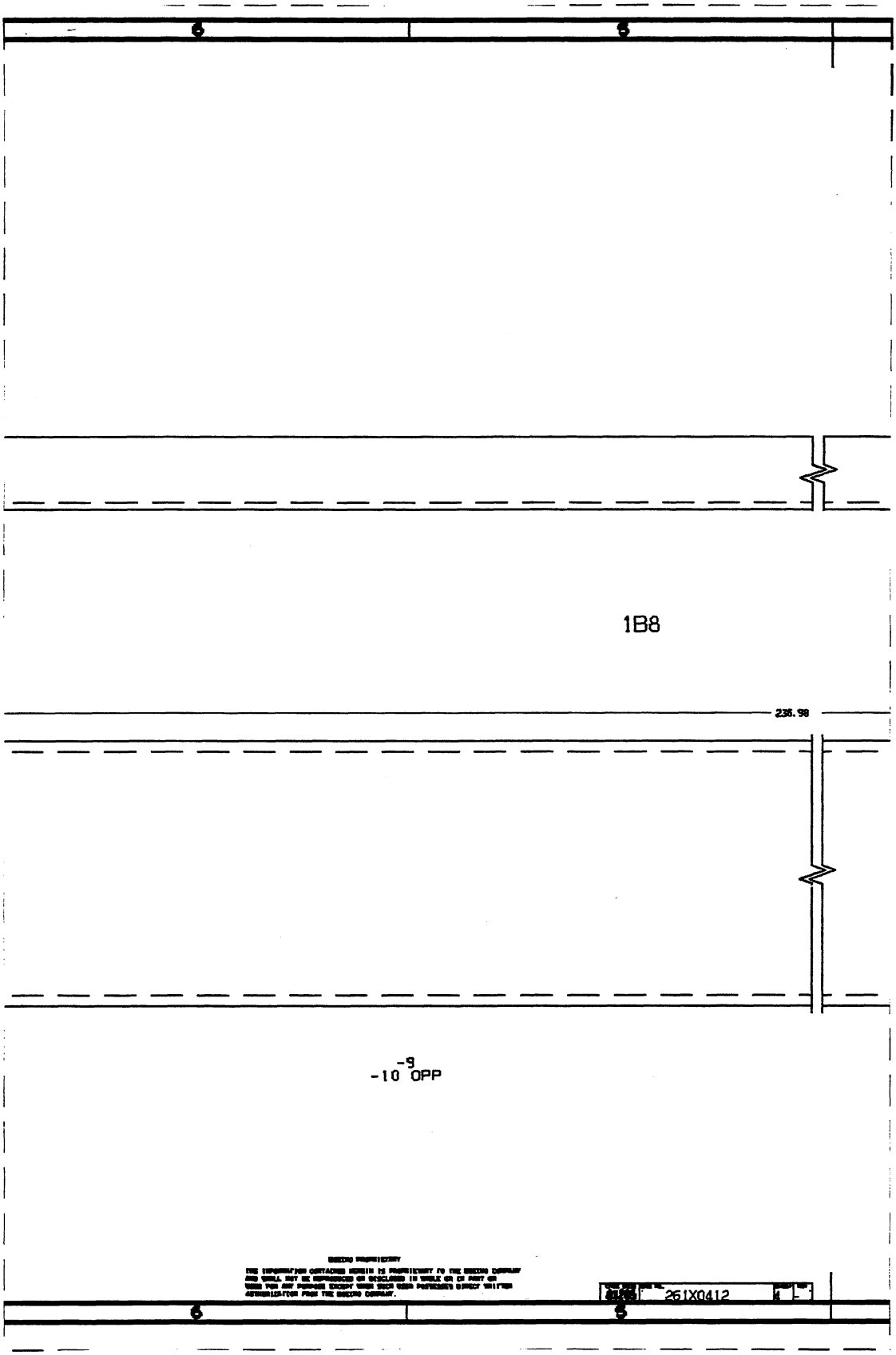
1B8
236.98
-9
-10 OPP
261X0412

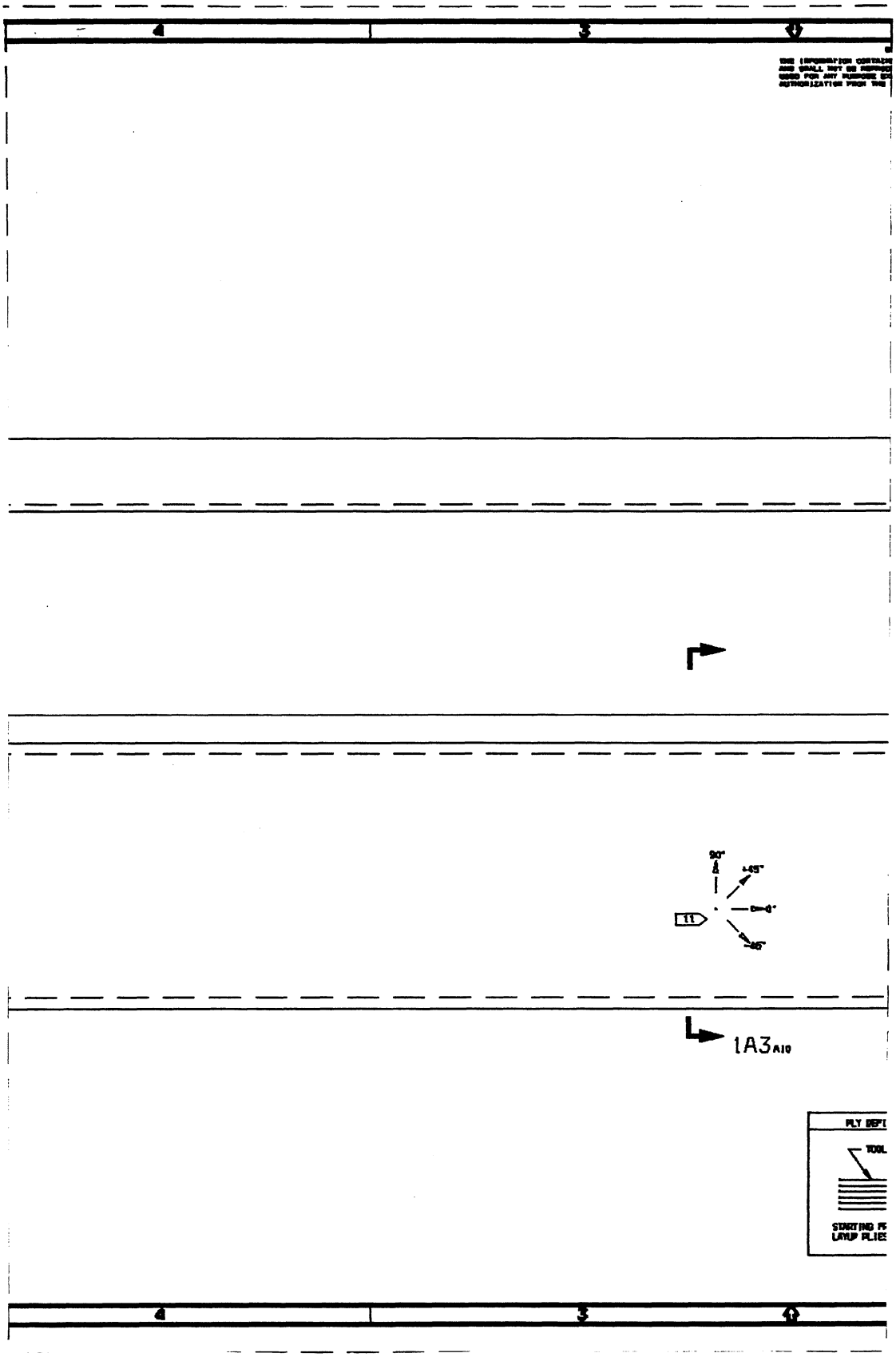
4
3
2
90°
+45°
0°
-45°
11
1A3A10
PLY DEPT
TOOL
STARTING PLY
LAYUP PLIES
4
3
2

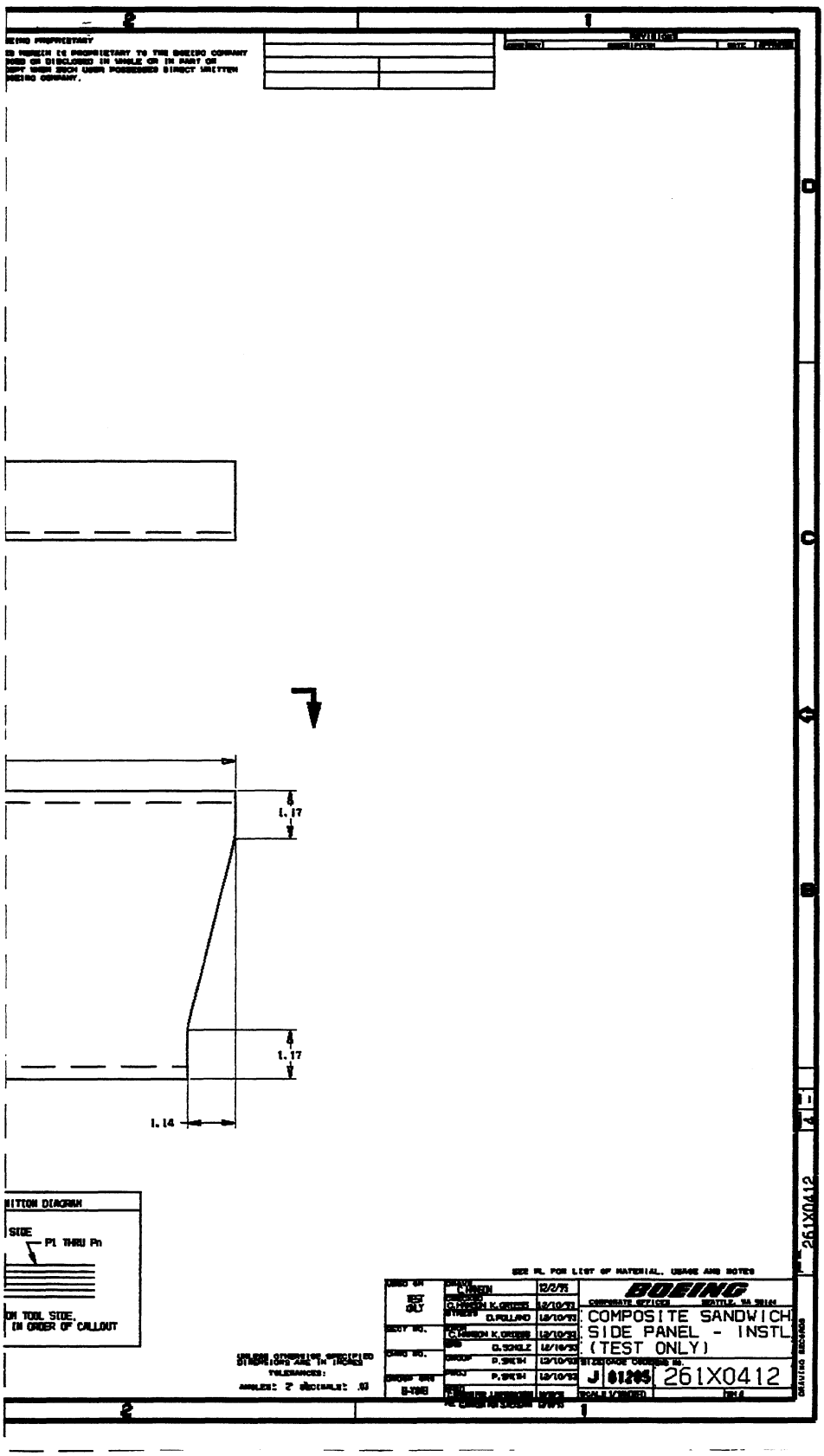
1.17
1.17
1.14
SIDE
P1 THRU Pn
ON TOOL SIDE,
IN ORDER OF CALLOUT
BOEING
COMPOSITE SANDWICH
SIDE PANEL - INSTL
(TEST ONLY)
J 61205 261X0412
261X0412

REPORT DOCUMENTATION PAGE

Form Approved
OMB No. 0704-0188

Public reporting burden for this collection of information is estimated to average 1 hour per response, including the time for reviewing instructions, searching existing data sources, gathering and maintaining the data needed, and completing and reviewing the collection of information. Send comments regarding this burden estimate or any other aspect of this collection of information, including suggestions for reducing this burden, to Washington Headquarters Services, Directorate for Information Operations and Reports, 1215 Jefferson Davis Highway, Suite 1204, Arlington, VA 22202-4302, and to the Office of Management and Budget, Paperwork Reduction Project (0704-0188), Washington DC 20503.

1. AGENCY USE ONLY *(Leave Blank)*	2. REPORT DATE	3. REPORT TYPE AND DATES COVERED
	April 1997	Contractor Report

4. TITLE AND SUBTITLE

Global Cost and Weight Evaluation of Fuselage Side Panel Design Concepts

5. FUNDING NUMBERS

C NAS1-18889
C NAS1-20013 (Task 2)
WU 510-02-13-01

6. AUTHOR(S)

D.R. Polland, S. R. Finn, K.H. Griess, J.L. Hafenrichter, C.T. Hanson, L.B. Ilcewicz, S.L. Metschan, D.B. Scholz, and P.J. Smith

7. PERFORMING ORGANIZATION NAME(S) AND ADDRESS(ES)

The Boeing Company
P.O. Box 3707
Seattle, WA 98124-2207

8. PERFORMING ORGANIZATION REPORT NUMBER

9. SPONSORING / MONITORING AGENCY NAME(S) AND ADDRESS(ES)

National Aeronautics and Space Administration
Langley Research Center
Hampton, VA 23681-0001

10. SPONSORING / MONITORING AGENCY REPORT NUMBER

NASA CR-4730

11. SUPPLEMENTARY NOTES

Langley Technical Monitor: W.T. Freeman, Jr.

12a. DISTRIBUTION / AVAILABILITY STATEMENT

~~FEDD~~ Unclassified - Unlimited

Subject Category 24

12b. DISTRIBUTION CODE

13. ABSTRACT *(Maximum 200 words)*

This report documents preliminary design trades conducted under NASA contracts NAS1 18889 (Advanced Technology Composite Aircraft Structures, ATCAS) and NAS1-19349 (Task 3, Pathfinder Shell Design) for a subsonic wide body commercial aircraft fuselage side panel section utilizing composite materials.

Included in this effort were (a) development of two complete design concepts, (b) generation of cost and weight estimates, (c) identification of technical issues and potential design enhancements, and (d) selection of a single design to be further developed. The first design concept featured an open-section stringer stiffened skin configuration while the second was based on honeycomb core sandwich construction.

The trade study cost and weight results were generated from comprehensive assessment of each structural component comprising the fuselage side panel section from detail fabrication through airplane final assembly. Results were obtained in three phases: (1) for the baseline designs, (2) after global optimization of the designs, and (3) the results anticipated after detailed design optimization. A critical assessment of both designs was performed to determine the risk associated with each concept, that is the relative probability of achieving the cost and weight projections. Seven critical technical issues were identified as the first step towards side panel detailed design optimization.

14. SUBJECT TERMS	15. NUMBER OF PAGES
Advanced Composite Technology Program; Transport fuselage side panel structures; Design and process trade studies; Skin/stringer construction; Honeycomb sandwich construction;	319
	16. PRICE CODE

17. SECURITY CLASSIFICATION OF REPORT	18. SECURITY CLASSIFICATION OF THIS PAGE	19. SECURITY CLASSIFICATION OF ABSTRACT	20. LIMITATION OF ABSTRACT
Unclassified	Unclassified	Unclassified	