NASA Contractor Report 4735

Advanced Technology Composite Fuselage—Manufacturing

K. S. Willden, C. G. Harris, B. W. Flynn, M. G. Gessel, D. B. Scholz, S. Stawski, and V. Winston

Contracts NAS1-18889 and NAS1-20013
Prepared for Langley Research Center

April 1997

NASA Contractor Report 4735

Advanced Technology Composite Fuselage—Manufacturing

K. S. Willden, C. G. Harris, B. W. Flynn, M. G. Gessel, D. B. Scholz, S. Stawski, and V. Winston
The Boeing Company • Seattle, Washington

National Aeronautics and Space Administration
Langley Research Center • Hampton, Virginia 23681-0001

Prepared for Langley Research Center
under Contracts NAS1-18889 and NAS1-20013

April 1997

Printed copies available from the following:

NASA Center for AeroSpace Information
800 Elkridge Landing Road
Linthicum Heights, MD 21090-2934
(301) 621-0390

FOREWORD

This document is one of nine complementary final technical reports on the development of advanced composite transport fuselage concepts. The work described was performed by the Boeing Commercial Airplane Group, Seattle, Washington, from May 1989 through December 1995 under contracts NAS1-18889 and NAS1-20013, Task 2. The contracts were sponsored by the National Aeronautics and Space Administration, Langley Research Center (NASA-LaRC) as part of the Advanced Composite Technology (ACT) program. Direction from NASA-LaRC was provided by M.J. Shuart, J.G. Davis, W.T. Freeman, and J.B. Nelson.

The nine documents comprising the final documentation for the NASA/Boeing ATCAS program include:

Advanced Technology Composite Fuselage

- **Program Overview** (CR-4734). *Synopsis of program approach, timeline and significant findings. Design synthesis considering manufacturing, materials, processes, structural performance, maintenance, and cost.*
- **Manufacturing** (CR-4735). *Baseline manufacturing and assembly approaches. Process and tooling developments, and manufacturing demonstration activities to address critical manufacturing issues.*
- **Materials and Processes** (CR-4731). *Baseline and alternative materials and processes. Material and process developments. Material performance.*
- **Structural Performance** (CR-4732). *Methods used for design sizing. Analysis and test activities supporting assessment of design development methodologies for critical performance issues.*
- **Repair and Damage Assessment Supporting Maintenance** (CR-4733). *Maintenance considerations in design. Detailed repair concepts for quadrant design. Fabrication, inspection, and analytical developments.*

Cost Optimization Software for Transport Aircraft Design Evaluation (COSTADE)

- **Overview** (CR-4736). *Synopsis of COSTADE initiative, including integration of cost, weight, manufacturing, design, structural analysis, load redistribution, optimization, and blending.*
- **Design Cost Methods** (CR-4737). *Components of cost analysis and their interactions. Theoretical framework for process-time prediction. Methods for developing and maintaining cost equations. Applications to ATCAS quadrant designs.*
- **User's Manual** (CR-4738). *COSTADE user instructions, including hardware requirements and installation procedures. Program structure, capabilities, and limitations. Basis of cost model and structural analysis routines. Example problems.*
- **Process Cost Analysis Database** (CR-4739). *Rationale for database framework. Database user's guide, including capabilities and limitations. ATCAS process step equations.*

Use of commercial products or names of manufacturers in this report does not constitute official endorsement of such products or manufacturers, either expressed or implied, by the Boeing Company or the National Aeronautics and Space Administration.

At completion of these contracts, Boeing program management included Bjorn Backman as Program Manager, Peter Smith as Technical Manager, and Larry Ilcewicz as Principal Investigator. Authors listed for this contractor report prepared portions of the document. The members (past and present) of the Boeing ACT contract team who contributed to the work described in this document include:

Program Management:
Phil Whalley
Ron Johnson
Ray Horton
Jordan Olson
Bjorn Backman

Technical Management:
Peter Smith

Principal Investigators:
Randy Coggeshall
Larry Ilcewicz

Structural Design:
George Truslove
Chris Hanson
Ken Griess
Mike Schram
Stephen Metschan
Mike Morris
Tuan Le

Computing Support:
Bob Lundquist
Bill Koch
Sterling Johnston

Structural Analysis:
Tom Walker
Ernie Dost
Gary Swanson
Blake Flynn
Gerald Mabson
David Carbery
Scott Finn
Dan Murphy
Bernhard Dopker
David Polland
William Avery
Jerry Bodine
Doug Graesser
Andre Williams
Mark Fedro
Peter Grant
Adam Sawicki
Pierre Minguet

Technical Aide:
Bill Waltari

Materials and Processes:
Dodd Grande
David Scholz
Karl Nelson
Tony Falcone
Brian Perkins

Manufacturing Technology:
Tom May
Kurtis Willden
Val Starkey
Tim Davies
Mark Gessel
Joe Hafenrichter
Bob Matetich
Ken Goodno
Dick Curran
Ken Dull
Rob Biornstad
Peter Lohr
Stan Stawski
Chris Harris
Greg Bell
Jan Koontz
Rob Synder
Tom Cundiff
Gary Moon

Cost Analysis:
Kent Venters
Will Gaylord
Cal Pfahl
David Tervo
Len Witonsky
Odo Bormke
Robert Humphrey
Michael Proctor
Hans Fredrikson
Dennis Stogin

Fire Worthiness:
Jim Peterson
Thomas Murray

Developmental Manufacturing:
Jose Valdez
Ponci Puzon
Bonnie Luck

Test Laboratories:
Ron Slaminko
John Schneider
Carl Preuss
Joan Dufresne
Tony Phillips
Dan Moreillon
Bill Hardrath

Business Management:
Jeff Heineman
Marge Apeles
Kira Goerlich

QC and NDE Development:
Ken Mackey
Brian Lempriere
Bill Fortig
John Linn

Weights:
Glenn Parkan

Repair Development:
Bert Bannink
Mike Evens
Sherry Marrese

Customer Support:
Dave Berg
Jeff Kollgaard

Materiel:
Maureen Hughes
Mark Jones
Steve Ruth
Doug Wood
Christal Tyson-Winston
Howard Lanie
Mark McConnell
Tom Hesketh

Industry And University Design-Build-Team Members

University of Washington:
Kuen Y. Lin
James Seferis
Zelda Zabinsky
Mark Tuttle

Stanford University:
Fu-Kuo Chang

Oregon State University:
Tim Kennedy

M.I.T:
Paul Lagace
Tim Gutowski
David Hoult
Greg Dillon
Hugh McManus

Drexel University:
Jonathan Awerbuch
Albert Wang
Alan Lau
Frank Ko

University of Iowa:
Roderic Lakes

University of Utah:
William Bascom
John Nairn

University of Wyoming:
Donald Adams
Rhonda Coguill
Scott Coguill

U. of Cal. Santa Barbara:
Keith Kedward

Univ. of British Columbia:
Anoush Poursartip

Brigham Young University:
Ken Chase

San Jose State University:
Robert Anderson

Dow-UT:
Rich Andelman
Douglas Hoon

Sikorsky Aircraft:
Christos Kassapoglou

Northrop/Grumman:
Ravi Deo
Steve Russell
Bob Ley
Ram Vastava
Ram Ramkumar

McDonnell Douglas:
Benson Black

Lockheed Aero. Systems:
Tony Jackson
Ron Barrie
Bob Chu
Dan Skolnik
Jay Shukla
Bharat Shah
Lowell Adams
Lisa Ott

Fiber Innovations:
Steve Goodwin
Garrett Sharpless

Hercules Materials Co.:
Doug Cairns
David Cohen
Roger Stirling
Lynn Muir
Will McCarvill
Yas Tokita

Alliant Techsystems:
Carroll Grant
George Walker
Tammy Harris
Todd Brown
Mark Wheeler
Jon Poesch
Vern Benson

American Airlines:
Jim Epperson
Marcus Peter

Northwest Airlines:
Jim Oberg
Erik Restad
Mark Wolf

United Airlines:
Bob Bernicchi
John Player

Cherry Textron:
Howard Gapp

Sunstrand:
Glen Smith
Hossein Saatchi
Bill Durako

ICI Fiberite:
Erinann Corrigan
Russ Holthe

G.M.I:
Roland Chemana

Intec:
Brian Coxon
Chris Eastland
Rod Wishart
Shreeram Raj
Don Stobbe

Zetec:
Chuck Fitch
Gregg Colvin

Draper Laboratory:
Ed Bernardon

Hexcel:
Stacy Biel
Julaine Nichols
Kevin Marshal

E. I. Du Pont De Nemours:
Jim Pratte
Hal Loken
Ginger Gupton

Materials Science Corp.:
Walt Rosen
Anthony Caiazzo

Structural Consultant:
John McCarty

EBCO Tooling:
Rich Roberts

TABLE OF CONTENTS

1.0 SUMMARY 1-1

2.0 INTRODUCTION 2-1

3.0 CROWN MANUFACTURING DEVELOPMENTS 3-1

3.1 GLOBAL EVALUATION TRADE STUDIES 3-1

3.2 DESIGN AND MANUFACTURING UPDATES 3-3

3.3 BASELINE MANUFACTURING APPROACH 3-7
- 3.3.1 Crown Panel Skins 3-7
- 3.3.2 Stringers 3-10
- 3.3.3 Circumferential Frames 3-11
- 3.3.4 Panel Assembly and Cure Tooling 3-14

3.4 MANUFACTURING ISSUES 3-15

3.5 PROCESS / TOOLING DEVELOPMENTS 3-17
- 3.5.1 AFP Skins 3-19
- 3.5.2 Stringer 3-20
- 3.5.3 Circumferential Frame 3-21
- 3.5.4 Panel Assembly and Cure Tooling 3-28
- 3.5.5 Through Thickness Reinforcement Development 3-34

3.6 LARGE SUBCOMPONENT DEMONSTRATIONS 3-36
- 3.6.1 Manufacturing Methods 3-36
- 3.6.2 Evaluation of Panel Quality 3-42

4.0 KEEL MANUFACTURING DEVELOPMENTS 4-1

4.1 GLOBAL EVALUATION TRADE STUDIES 4-1

4.2 DESIGN UPDATES 4-3

4.3 BASELINE MANUFACTURING APPROACH 4-5
- 4.3.1 Panel Skins 4-5
- 4.3.2 Circumferential Frames 4-6
- 4.3.3 Intercostals and Attachment Chords 4-6
- 4.3.4 Cargo Floor Beams and Stanchions 4-6
- 4.3.5 Core Blanket 4-6
- 4.3.6 Close-outs 4-7
- 4.3.7 Tooling 4-9
- 4.3.8 Panel Assembly and Cure 4-10

4.4 MANUFACTURING ISSUES 4-10

4.5 PROCESS / TOOLING DEVELOPMENTS 4-12
4.5.1 Core Machining, Forming, and Splicing 4-14
4.5.2 Core Crush Trials 4-14
4.5.3 Development of Core 4-15
4.5.4 Sandwich Cure Cycle Development 4-16
4.5.5 Precured-Frame-to-Sandwich Bonding 4-18
4.5.6 Close-outs 4-19

4.6 LARGE SUBCOMPONENT PANEL DEMONSTRATIONS. 4-24
4.6.1 AFP Process 4-26
4.6.2 Core Blanket Fabrication 4-26
4.6.3 Panel Assembly 4-28
4.6.4 Panel Cure 4-28
4.6.5 Evaluation of Panel Quality 4-29

5.0 SIDE MANUFACTURING DEVELOPMENTS 5-1

5.1 GLOBAL EVALUATION TRADE STUDIES 5-2

5.2 DESIGN UPDATES 5-6

5.3 BASELINE MANUFACTURING APPROACH 5-7
5.3.1 Skin Fabrication 5-8
5.3.2 Circumferential Frames 5-9
5.3.3 Core Blanket Fabrication 5-9
5.3.4 Panel Edge and Window Close-outs 5-10
5.3.5 Panel Cure Tooling 5-11
5.3.6 Panel Assembly and Cure 5-12
5.3.7 Window Belt Assembly 5-13
5.3.8 Door Reinforcement Elements 5-13
5.3.9 Fabrication of Floor Beams and Stanchions 5-13

5.4 MANUFACTURING ISSUES 5-14

5.5 SIDE PROCESS / TOOLING DEVELOPMENTS 5-15
5.5.1 IML and OML Tooling Concepts 5-17
5.5.2 Ramped Core Design & Manufacturing Development 5-18
5.5.3 Panel Assembly 5-20
5.5.4 Cure Cycle Process 5-23

5.6 LARGE SUBCOMPONENT DEMONSTRATIONS 5-26
5.6.1 Skin Fabrication 5-26
5.6.2 Frame Fabrication 5-29
5.6.3 Core Blanket Fabrication 5-31
5.6.4 Panel Assembly/Cure Tooling 5-36
5.6.5 Panel Assembly/Cure 5-36
5.7 EVALUATION OF PANEL QUALITY 5-42
5.7.1 Panel Dimensional Tolerances 5-42

5.7.2 Sandwich Panel Quality 5-45

6.0 EVALUATION FOR FULL-SCALE FUSELAGE 6-1

6.1 DESIGN / MANUFACTURING ASSESSMENT 6-2
6.1.1 AFP Process Development 6-3
6.1.2 Core Blanket Fabrication 6-6
6.1.3 Precured Elements - RTM/Braiding 6-7
6.1.4 Tooling 6-8
6.1.5 Panel Assembly, Cure and Warpage Control 6-10

6.2 FUSELAGE ASSEMBLY 6-14

7.0 CONCLUDING REMARKS 7-1

7.1 DEVELOPMENT ACTIVITIES AND LESSONS LEARNED..... 7-1

7.2 FUTURE DEVELOPMENT EFFORTS 7-6

8.0 REFERENCES 8-1

Appendix A Design Families
Appendix B Through-Thickness Reinforcement (Z-pins)
Appendix C Northrop-Grumman Door Edge Frame Element Definition

ABBREVIATIONS

2-D	Two Dimensional
3-D	Three Dimensional
ACT	Advanced Composite Technology
AFP	Automated Fiber Placement
ATCAS	Advanced Technology Composite Aircraft Structures
ATLM	Automated Tape Lamination Machine
BCA	Band-Cut-and-Add
CATIA	Computer Aided Three Dimensional Interactive Application
CATS	Commuter Aided Theodolite System
COSTADE	Cost Optimization Software for Transport Aircraft Design and Evaluation
c.o.v.	Coefficient of Variation
CRTM	Continuous Resin Transfer Molding
CTE	Coefficient of Thermal Expansion
CTLM	Contour Tape Lamination Machine
DBT	Design Build Team
FE	Finite Element
FEM	Finite Element Model
HRP	Honeycomb Reinforced Phenolic
IML	Inner Mold Line
Invar36	High nickel alloy steel (36 %)
NC	Numerically Controlled
NDI	Nondestructive Inspection
OML	Outer Mold Line
PCAD	Process Cost Analysis Database
pcf	Pounds per Cubic Foot
psi	Pounds per Square Inch
rpm	Revolutions per Minute
RTM	Resin Transfer Molding
TCA	Tow-Cut-and-Add
Tg	Glass Transition Temperature
TPC	Thermoplastic Core
TTU	Through Transmission Ultrasonics

1.0 SUMMARY

The goal of Boeing's Advanced Technology Composite Aircraft Structures (ATCAS) program is to develop the technology required for cost-and weight-efficient use of composites. A design build team (DBT) approach was used to identify materials and processes appropriate for use in transport fuselage applications. Carbon fiber reinforced epoxy was chosen for fuselage skins and stiffening elements, and for passenger and cargo floor structures. The automated fiber placement (AFP) process was selected for fabrication of stringer-stiffened and sandwich skin panels. Circumferential and window frames were braided and resin transfer molded (RTM'd). Pultrusion was selected for fabrication of floor beams and constant-section stiffening elements. Drape forming was chosen for stringers and other stiffening elements cocured to skin structures.

Development of selected manufacturing processes, associated materials, and tooling concepts were pursued with the aid of industry and university associates. Significant process development efforts included AFP, braiding, RTM, autoclave cure, and core blanket fabrication for both sandwich and stiffened-skin structure. Outer-mold-line (OML) and inner-mold-line (IML) tooling was developed for sandwich structures (with cobonded frames) and stiffened-skin structure (with cocured stringers and cobonded frames).

The effect of design details, process control and tool design on repeatable, dimensionally stable, structure for low cost barrel assembly was assessed. Subcomponent panels (7'x10') representative of crown, keel, and side quadrant panels were fabricated to assess scale-up effects and manufacturing anomalies for full-scale structures. Manufacturing databases including time studies, part quality, and manufacturing plans were generated. These databases supported the development of designs and analytical models to access cost, structural performance, and tolerance.

2.0 INTRODUCTION

Boeing's Advanced Technology Composite Aircraft Structures (ATCAS) program (contract NAS1-18889) was initiated in May 1989 as an integral part of the NASA sponsored Advanced Composites Technology (ACT) initiative. As an extension of this work, Task 2 of Materials Development Omnibus Contract (MDOC, contract NAS1-20013) was put in place in November 1993. Combined, these two contracts addressed concept selection and technology development (referred to as Phases A and B). An additional contract (NAS1-20553) has been initiated to verify this technology at a large scale (referred to as Phase C). The goal of the ACT initiative is to develop composite primary structure for commercial transport aircraft with 20-25% less cost and 30-50% less weight than equivalent metallic structure.

The ATCAS program activities within the ACT framework have focused on fuselage structure. More specifically, the primary objective of the program is to develop and demonstrate an integrated technology which enables the cost- and weight-effective use of composite materials in fuselage structures of future aircraft. The area of study is a pressurized aft fuselage section of a wide body airplane with a diameter of 244 inches (Figure 2-1). The structure, located immediately aft of the wing-to-body intersection and main landing gear wheel well, is designated Section 46 on Boeing aircraft. This section, highlighted in Figure 2-1, contains most of the structural details and critical manufacturing issues found throughout the fuselage. It has significant variations in design detail due to relatively high loads in the forward end which diminish toward the aft end, allowing a transition to minimum gage structure.

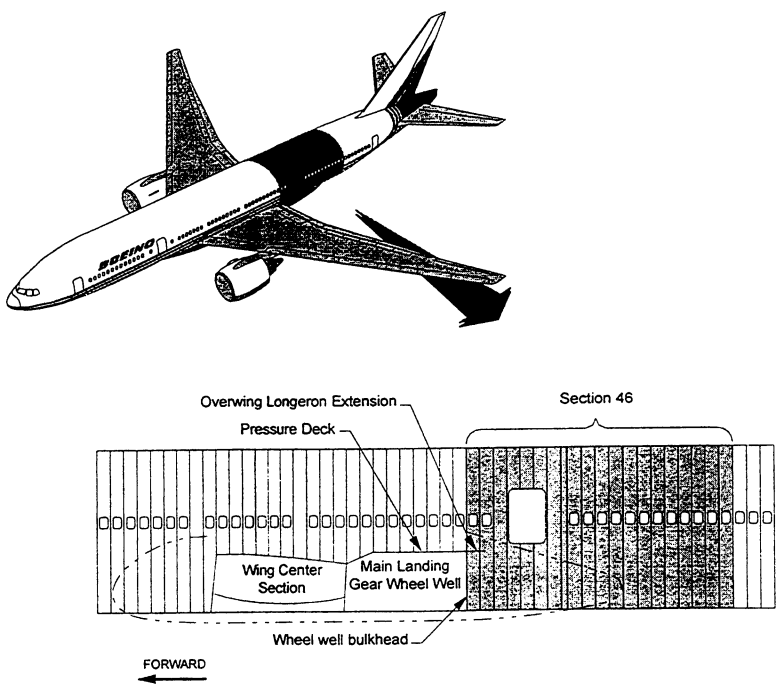

Figure 2-1. Baseline Vehicle and Study Section

The fuselage cross-section is divided into four circumferential segments in the baseline manufacturing approach. These "quadrants" consist of a crown, keel, and left and right side panels, as illustrated in Figure 2-2. The quadrant approach was adopted to reduce panel assembly costs (fewer longitudinal splices) and leverage the size-related efficiencies of the automated fiber placement (AFP) process for laminated skins, while maintaining design flexibility for regions with differing requirements [1, 2, 3].

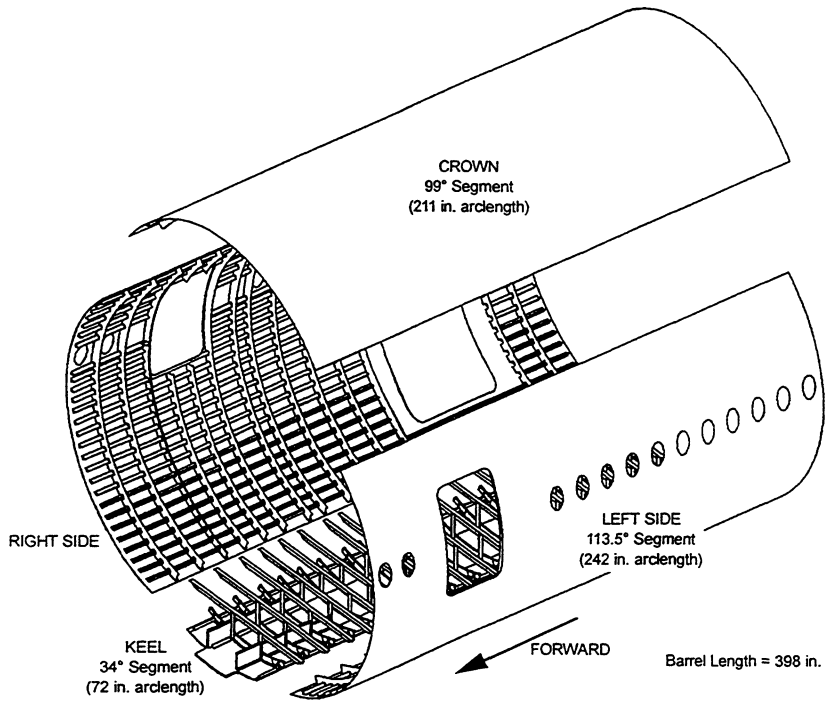

Figure 2-2. Fuselage Quadrants

Design Build Teams (DBTs), consisting of various disciplines responsible for creating aircraft structure (e.g., design, manufacturing, cost analysis, materials, structures, quality control), were formed to develop detailed designs and manufacturing plans for each quadrant, as well as the associated splices. Design trade studies resulted in the selection of a skin/stringer configuration for the crown, and sandwich construction for the keel and side quadrants [1, 4]. The design process was initiated first for the crown, then the keel, and finally the side quadrant.

A three step process was employed by the ATCAS team for initial development of the fuselage designs and manufacturing processes [2, 3]. First, baseline concepts were selected for crown, keel, and side panels which had the greatest potential for cost and weight savings at an acceptable risk. The second step was a "global evaluation" of selected baseline and alternative concepts in which detailed designs and manufacturing preplans were developed for cost and weight estimates. A globally optimized design was generated from the most attractive features of baseline and alternative concepts. The next step in design development, called "local optimization," involved detailed investigation and optimization of individual design elements.

Manufacturing development activities were done in parallel with the design trades. These efforts aided the DBTs in defining and evaluating cost-effective, producible designs. Baseline manufacturing approaches and associated process development activities for the crown, keel, and side quadrants are described in Sections 3.0, 4.0, and 5.0, respectively. Results from the large sub component panel demonstrations are also described, including assessments of tooling, materials, and process control for subsequent full-barrel fabrication. Section 6.0 discusses the overall feasibility of the ATCAS quadrant concepts including the relationship between design and producibility for efficient assembly of a full-scale fuselage structure. Program accomplishments and recommendations for future development activities are summarized in Section 7.0.

3.0 CROWN MANUFACTURING DEVELOPMENTS

3.1 Global Evaluation Trade Studies

As discussed in Section 2.0, DBTs were formed to conduct trade studies of candidate quadrant designs and manufacturing approaches for the crown. Baseline production rate assumptions of five shipsets per month for 300 ships was used for developing manufacturing approaches. Several crown panel designs were developed for each of three design families (B, C, and D; see Appendix A) as shown in Figure 3-1. Family B is a stiffened skin with cocured stringers and bolted frames. Family C is a skin/stringer/frame configuration with both stringers and frames cobonded or cocured to the laminate skin. Family D is a sandwich configuration with cobonded frames to provide hoop stiffening. For each design a fabrication and assembly plan was developed to provide sufficient detail for accurate cost estimates. Potential manufacturing processes and material systems that were evaluated for the individual panel details are shown in Table 3-1.

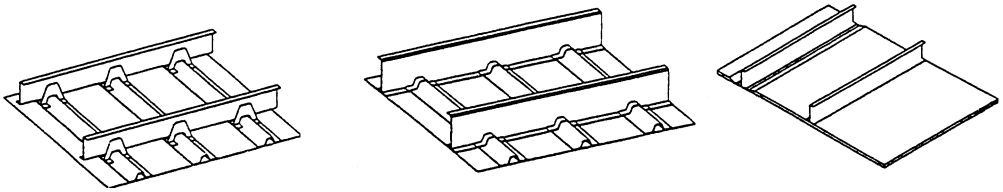

Family B	Family C	Family D
Bonded Stiffeners	Bonded Stiffeners	Sandwich
Bolted Frames	Bonded Frames	Bonded Frames

Figure 3-1. Design Families

Table 3-1. Process Trade Studies

Details	*Process*
Skins	1) AFP (Tow, Hybrid AS4/S2) 2) CTLM (Contoured Tape Lamination Machine , tape 12")
Frames	1) Braiding / Resin Transfer Molding (Triaxial 2-D braid) 2) Compression molding 3) Stretch forming (Thermoplastic, discontinuous fibers) 4) Pultrusion / Pull-forming
Stringers	1) Hat - ATLM/Drape forming (cocured, thickness variation) 2)"J"- Pultrusion
Panel Assembly	1) Cocured/cobonded stringers, cobonded frames 2) Cocured/cobonded stringers, fastened frames 3) Sandwich panels, cobonded frames

Cost estimates were the result of a step-by-step appraisal of the process sequences for each design detail. Important cost drivers such as machine capabilities, process limits, material utilization rates, rate tooling, learning curves, and shop variation were considered in producing estimates. Additionally, to more fully understand the potential of each family, "new" designs, beyond those originally studied in detail, were created. These new designs were derived by modifying and/or combining attractive elements of the original six concepts. The costs and weights of these new designs were estimated based on detailed calculations for the original designs. Cost and weight comparisons between the competing designs led to the selection of a Family C skin-stringer-frame configuration for further optimization (Figure 3-2). Verification was made through subcomponent hardware demonstrations. Results of the crown global evaluation were described in detail in [3]. The following descriptions summarize characteristics of the selected concept.

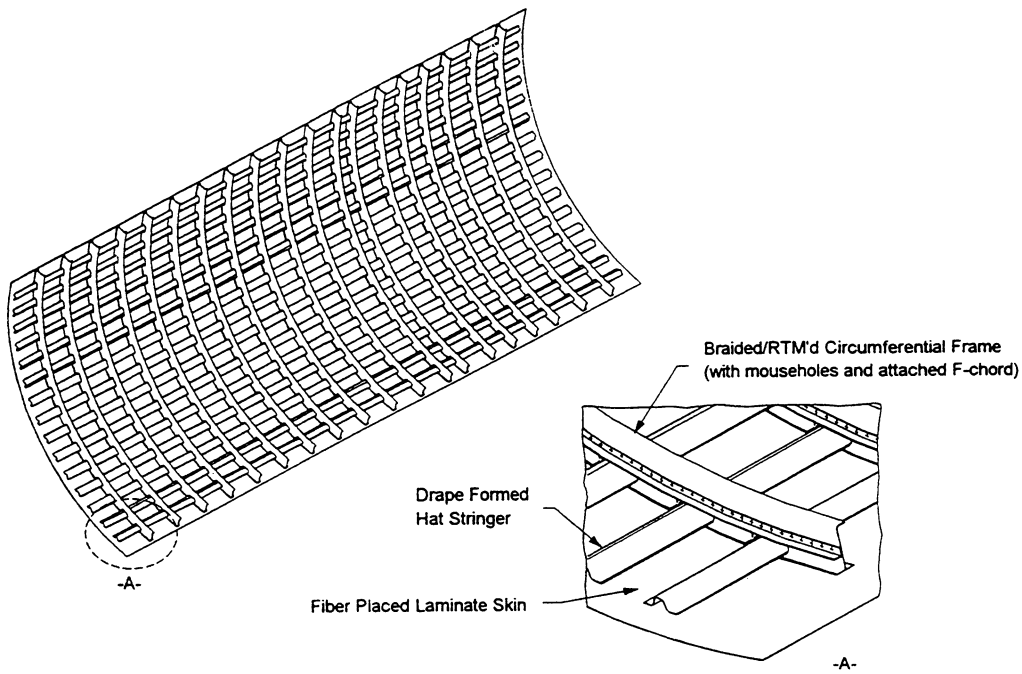

Figure 3-2. Crown Panel Configuration and Manufacture

Skins: Skins were fabricated with the automated fiber placement (AFP) process and AS4/938 tow prepreg. Multiple crown skins are fabricated on a dedicated AFP winding mandrel and transferred to the outer-mold-line (OML) cure tool for subsequent panel assembly (Fig. 3-3).

Stringers: A stringer preform was constructed from AS4/938 tape using an automated tape lamination machine (ATLM). The preform was cut into charges, then drape formed with a one-step process into the hat configurations. The forming mandrel was used for part transfer and cure tooling.

Frames: J-section circumferential frames were made from braided textile preforms impregnated with Shell 1895 by resin transfer molding (RTM). Tooling designed for multiple frame fabrication reduced material scrap rate and recurring labor.

Panel Assembly: Skins were placed on the OML cure tool followed by stringer and frame location. The precured frames and uncured stringers were bonded to the uncured skin during a single autoclave cure process. Resin flow was controlled with flexible IML tooling to ensure bond integrity at the stringer-frame intersections. Hard OML tooling was used to control surface contour for aerodynamic requirements.

Figure 3-3 shows the conceptial crown quadrant factory that would utilize the cost advantages of AFP, braiding/RTM, and unique tooling for cobonding of skin, stringer, and frames as discussed in [4] and [5]. The skins would be fabricated four at a time to produce a cost savings for tooling and labor. The sixteen-foot long RTM frames would be produced sixteen at a time to realize the same benefits. Tooling rate and process flow time are discussed in more detail in [3] and [6].

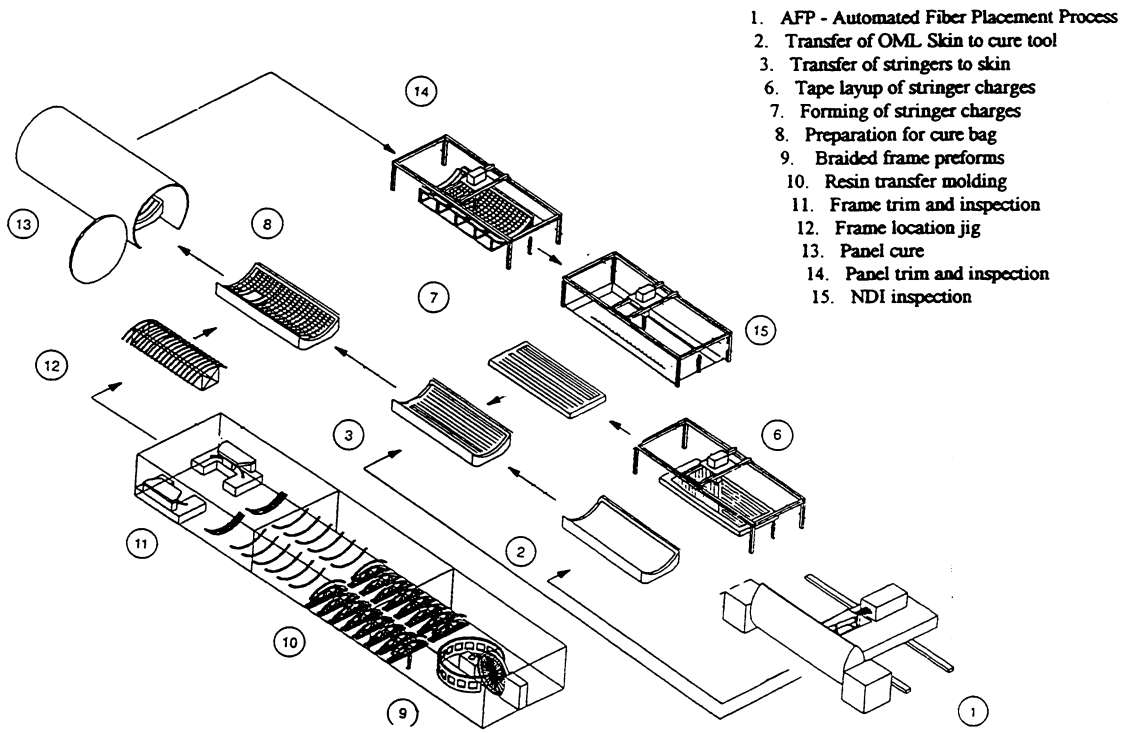

Figure 3-3. Factory for Crown Global Configuration

Alternative design concepts considered during global evaluation included a stiffened skin panel with mechanically fastened Z-section frames, and a sandwich panel with cobonded J-section frames [3]. Mechanically fastened frames offer a reduction in IML tooling complexity, reducing manufacturing risks and cure preparation costs. This may be offset in part by providing assembly allowances compensating for tolerance accumulations. The ability to quantify these costs can only be addressed after similar evaluations of the keel and side quadrants have been performed which include full-scale demonstrations.

3.2 Design and Manufacturing Updates

The skin-stringer configuration selected for the crown quadrant showed a small cost and weight advantage over the sandwich configuration. However, later it was realized that greater cost

efficiency might be achieved if all quadrant configurations were similar in design and manufacturing approach. A sandwich design concept for the crown offered tooling and process commonality with the side and keel designs (Sections 4.0 and 5.0). It also offered the potential for eliminating circumferential frames. Therefore, further optimization of the crown panel design was conducted. This included structural analyses, manufacturing hardware demonstrations, subcomponent tests, and utilized cost optimization software.

Design and process modifications for the crown panel during local optimization are presented in Tables 3-2 and 3-3 and in Figure 3-4. The results of design or manufacturing changes and how they impact cost, manufacturing risk, and structural performance are summarized. Frame costs could be reduced by 30% through design optimization. Significant risks associated with panel assembly and cobonding were reduced by widening the mouse hole to avoid tolerance accumulation of the stringer, frame, and skin (at the expense of stringer support provided by the frame). In addition, the number of required RTM tools was cut to five based on factory flow simulations.

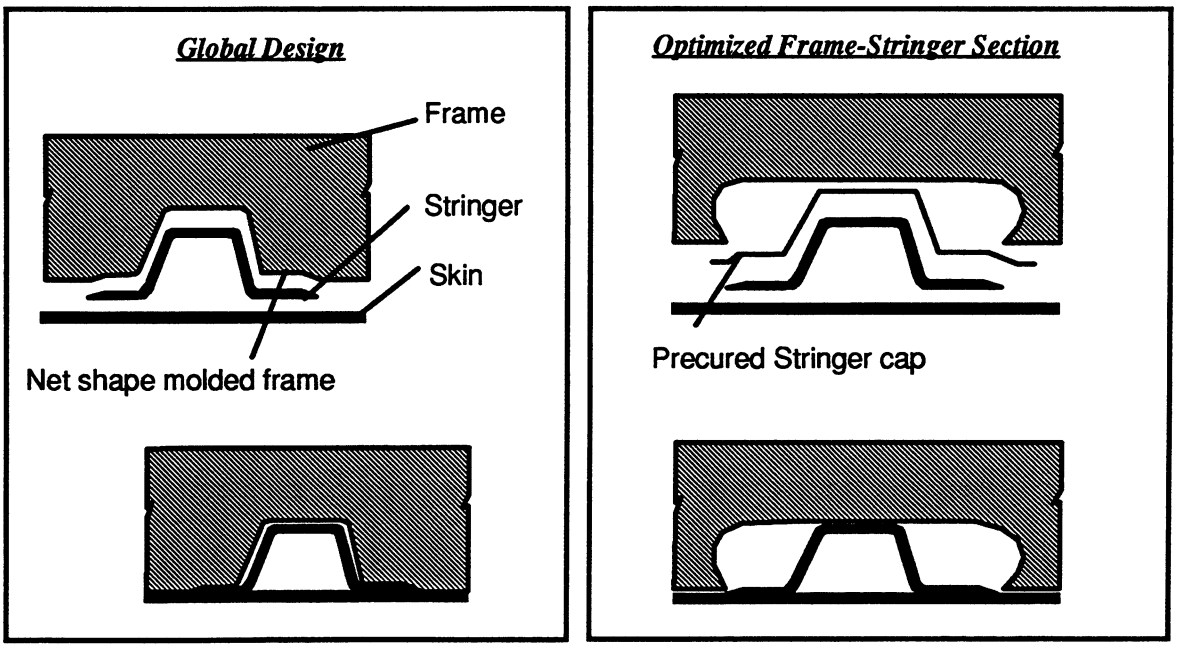

Figure 3-4. Global and Local Optimized Frame

Table 3-2. Optimization of Cobonded Frame

Global Design	Local Optimization	Effect
Small Mouse Hole	Wider Mouse Hole	o Reduce tolerance build-up o Reduce tooling cost
16 tools	5 tools	o Reduce tooling cost

Bottom flange - 6 plies	Reduced to 3 plies	o Increase performance o Reduce cost o Reduce weight
Braided Noodle	Adhesive Noodle	o Increase damage tolerance
Flange edge cut 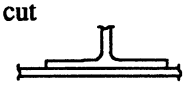	Tapered Edge 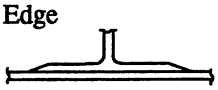	o Minimize resin pools o Lower cure bagging risks o Increase pull-off strength

Table 3-3 shows cost and risk reduction of stringer fabrication due to automation, tool design, and AFP efficiencies. Major cost savings for stringers was accomplished by reducing the number of processing steps using flexible low CTE mandrels and automating trimming operations. When the tow band was increased from a four inch to six inch width, a 2.6% cost saving was realized for the skin and stringer fabrication. The stringer flanges, originally trimmed straight, were subsequently modified with a 30° taper cut to reduce resin pooling. The total stringer and skin cost savings was 17.8% over the original design which reduced the total crown panel cost by 2.2%.

Table 3-3. Local Optimization of Skin and Stringer Design and Fabrication

Global Design	*Local Optimization*	*Effect*
4" Tow band width	6" Tow band width	o Reduce labor costs
16 Stringers	10 Stringers	o Tooling cost o reduce weight
Manual Trimming	Automated trimming	o Reduce labor costs
Stringer non-tapered edge	Tapered Edge	o Minimize resin pools o Increase pull-off strength
Drape Forming	Optimized procedures to a one step	o Reduce processing steps

In the initial panel assembly approach, frames were located on semi-rigid IML tooling followed by location of the stringer charges (Figure 3-5). Flexible IML tooling, frames, and stringer charges were transferred to the skin which was prelocated on the OML cure tool. Early manufacturing demonstrations identified risks associated with frame and stringer location control and non-uniform shrinkage of the flexible cure bag [7]. Subsequently, the panel assembly approach was modified so that the panel was assembled on the OML cure tool, minimizing panel assembly tooling and associated costs.

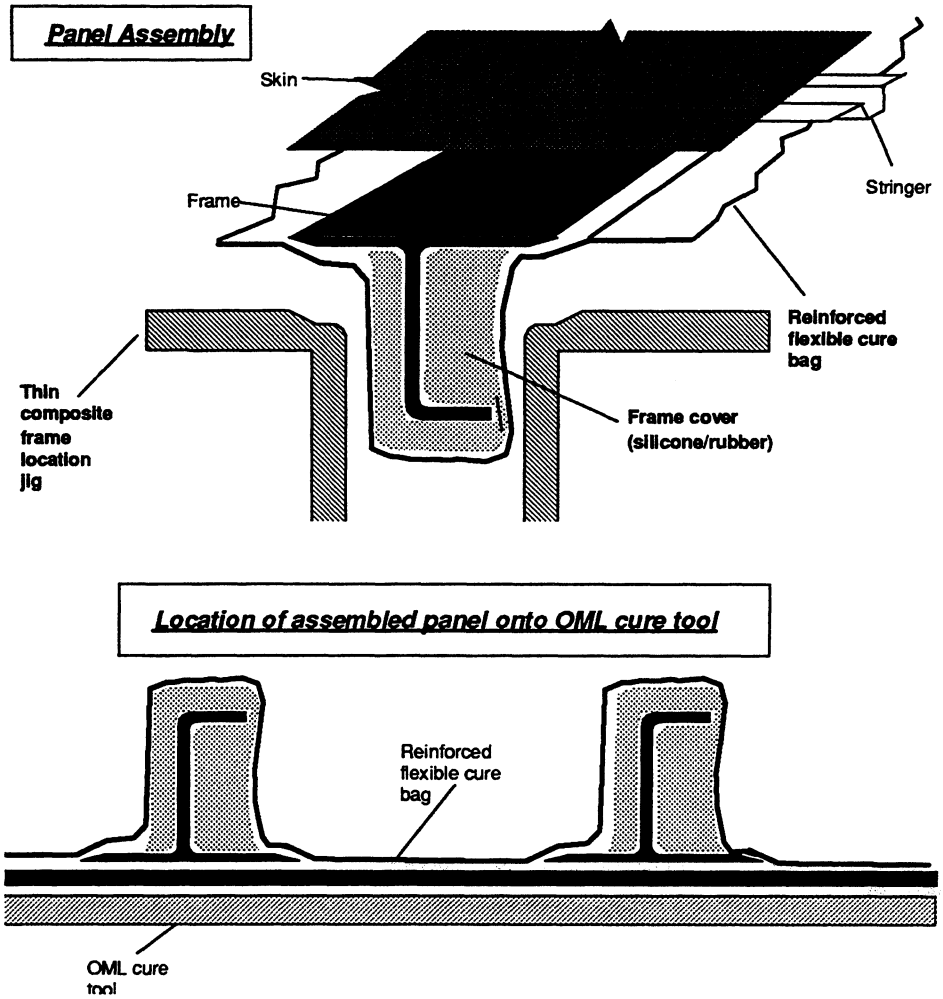

Figure 3-5. Global Panel Assembly Approach

The flexible IML tooling and cure bag system were also modified for the new OML panel assembly approach as shown in Table 3-4 and Figure 3-6, with additional discussion in Section 3.3.

Table 3-4. Local Optimization for Panel Assembly

Global Design	*Local Optimization*	*Effect*
1-Piece reusable net shape cure bag	2- piece bag (continuous textured silicone bag and individual cauls)	o Reduce labor costs o Reduce tooling costs o Tolerance accommodations o Uniform pressure control

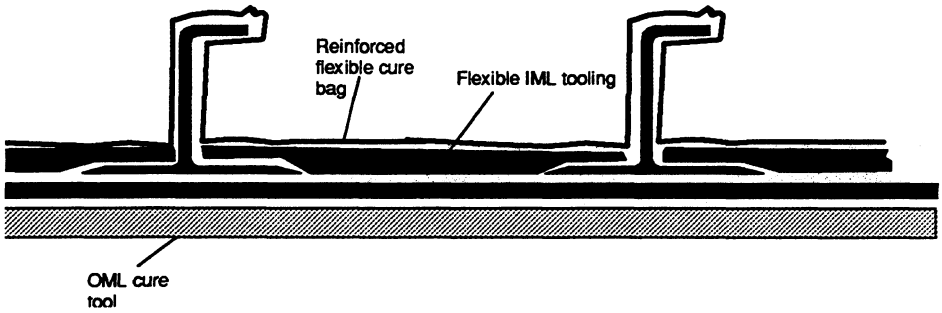

Figure 3-6. Modified Panel Assembly Approach

3.3 Baseline Manufacturing Approach

The manufacturing approach for the crown quadrant panel was summarized in Section 3.1, and is described in more detail below. The baseline approach includes the design and process updates described in Section 3.2. Processes that are common to the crown, keel, and side panels will also be discussed in Section 3.3.

3.3.1 Crown Panel Skins

The AFP process (Figure 3-7) was selected as the baseline process for fabricating fuselage skin panels. This selection was based on the potential for reduced material cost compared with prepreg tape, high lay-up rates over contoured surfaces, and efficient ply tailoring capabilities. Unlike tape, tow material does not require backing paper, so costs and machine downtime associated with backing paper are eliminated. The output for a single tow placement head ranges from 1-100 pounds of material per hour depending on laminate design and material handling characteristics. Lay up rates for the crown skin were estimated at 25 lbs/hr for a finished uncured skin, including down time and ply tailoring.

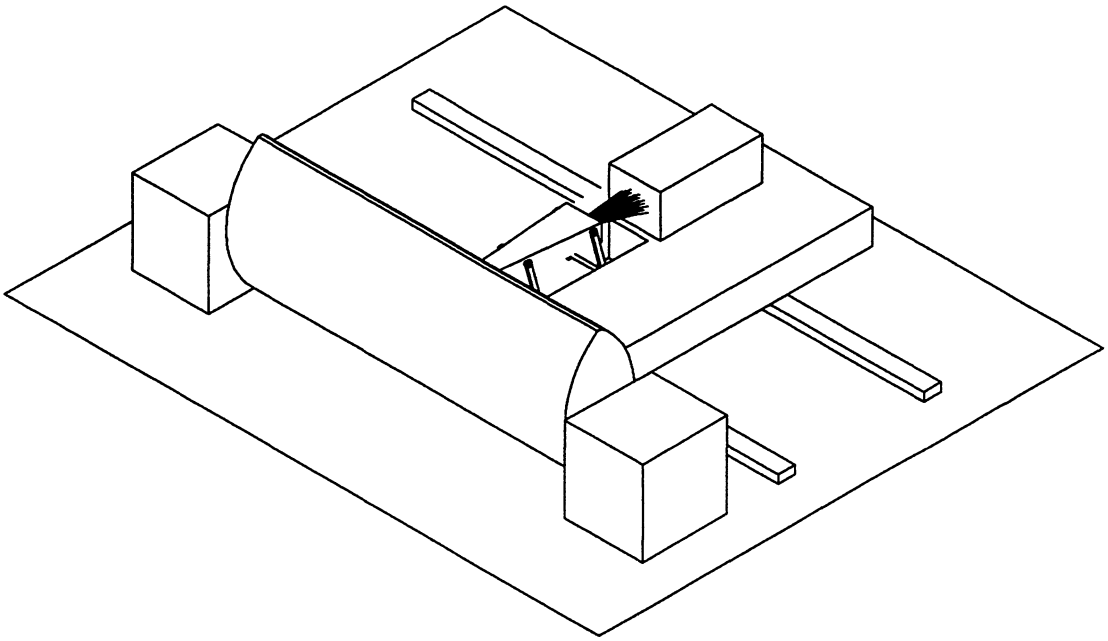

Figure 3-7. Schematic of AFP Process for Crown Panels

Hercules' band-cut-and-add (BCA) fiber placement head was used for crown panel development work. The BCA head columnates and "ribbonizes" individual prepreg tows into a band of prepreg tape just prior to contact with the tool (Figure 3-8). A limitation of this process is a requirement for band end cuts to be perpendicular to the fiber orientation. BCA head fiber placement process variation has been shown to have a significant influence on material performance [8,9]. An alternative skin fabrication process would be automated lay-up of prepreg tape, which would be limited to mildly contoured surfaces. Another alternative skin fabrication process would be fiber placement with Hercules' tow-cut-and-add (TCA) head (Figure 3-9). The TCA head, which places individual prepreg tows, offers greater ply drop/add capability. Initial Phase A/B activities indicated the BCA head was 20% more efficient than the TCA head, due to reduced down time. Recent advancements in TCA head technology and tow material quality have improved the TCA efficiency. Use of the BCA head is still preferred for laminates with minimal ply drops over a large surface area.

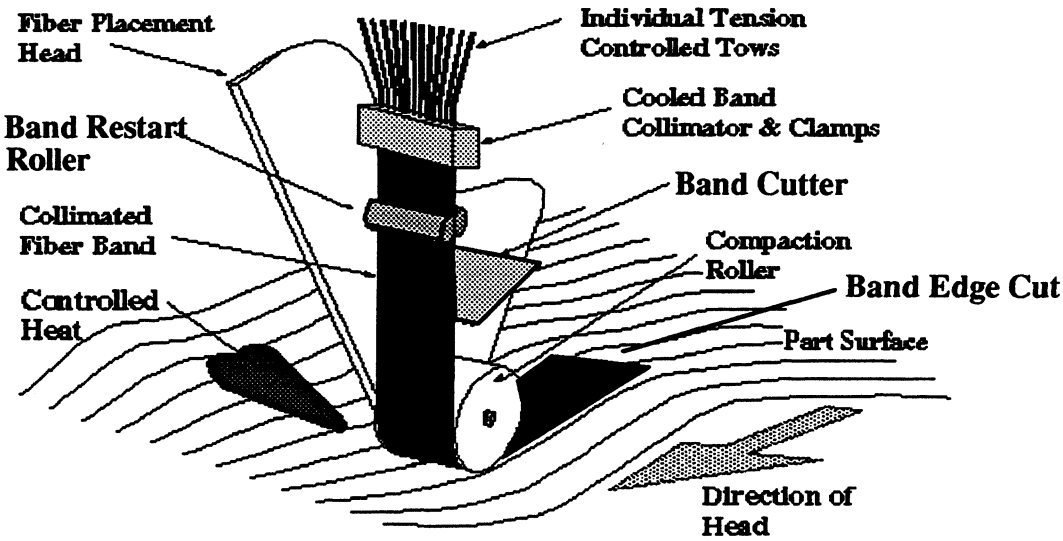

Figure 3-8. AFP Band Head (BCA)

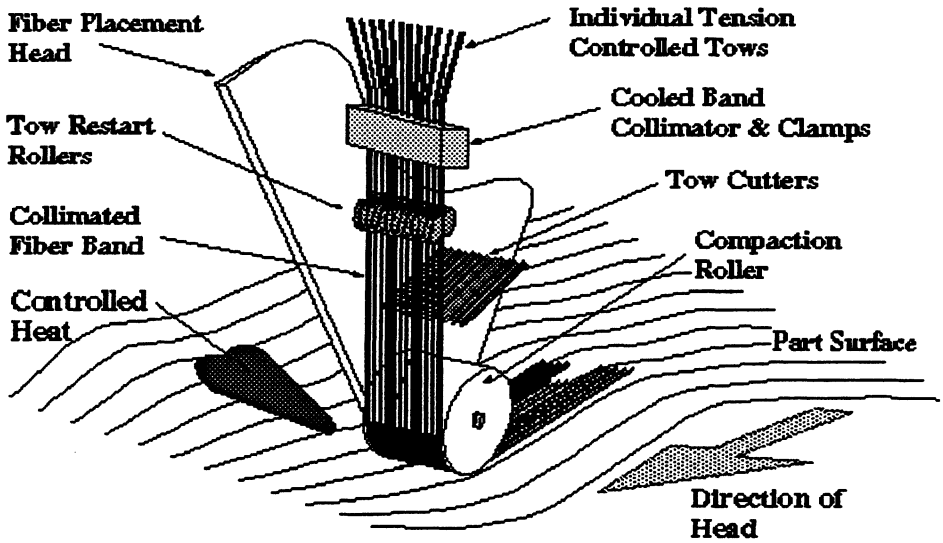

Figure 3-9. AFP Tow Head (TCA)

A standard modulus carbon fiber in an untoughened epoxy matrix (Hercules AS4/3501-6 or Fiberite AS4/938) was selected for fabrication of the skin laminates and stringer charges based on cost and weight trade studies [3] and [10]. Since the Fiberite AS4/938 system used a solvated impregnation process instead of a hot melt process, dry peel ply was required to help reduce entrapment of volatiles during cure. An alternative skin material is an intraply carbon/glass hybrid which provides excellent notched tension performance as discussed in [10]. In order to minimize fiber breakout and galvanic corrosion at aluminum interfaces, fiberglass fabric surface plies would likely be added to the IML and OML surfaces. Fabric outer plies have also been found to improve the tension fracture toughness of some laminated composite materials [10]. Hexcel's

T300/F584 and Hercules' AS4/8552 are alternative skin materials which are compatible with sandwich design concepts and processing requirements. T300/F584 may offer the improved tension fracture properties of an untoughened matrix [tom's cr]. AS4/8552 offers commonality with keel and side quadrant panels as discussed in later sections. Final material selection for the crown quadrant will be made after Phase C trade studies are completed to determine the potential cost benefit of common material systems for all quadrants.

3.3.2 Stringers

Laminates drape formed into a hat configuration were considered to be the most efficient stringer fabrication process [3]. Figure 3-10 shows the stringer drape forming process which uses AS4/3501-6 material. The laminate would be constructed using an automated tape laying gantry system with 12" wide material placed at 100 ft/min. The same gantry system is then used to rough trim and label the stringer charge. Individual charges are transferred, then formed in a one-step process using the stringer cure mandrel as part of the forming tool. Since the mandrel must be extracted after cure, flexible materials such as silicone or flexible laminate mandrels must be used. The charge and stringer cure mandrel are placed on a heated female contour tool. A reusable bagging system seals the tool, as vacuum forces the heated stringer charge into contour against the stringer mandrel. Prior to removal, the edges of the stringers are trimmed using the forming tool as a trim guide. The stringer charge and mandrel are then transferred to the panel assembly for cure. The soft stringer cure tooling allows the stringers to conform to skin ply tailoring.

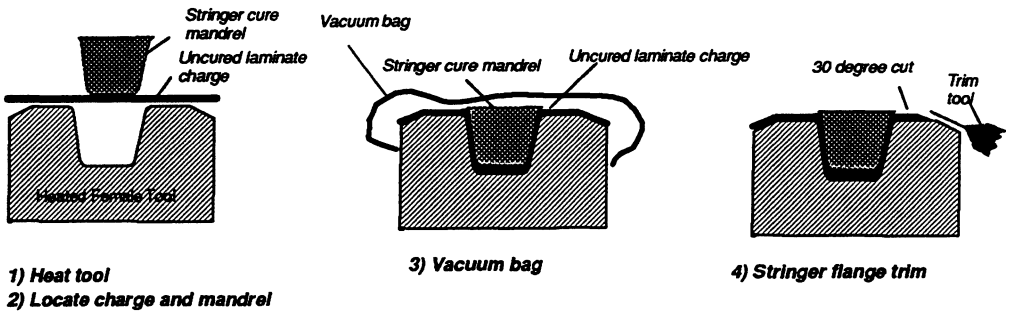

Figure 3-10. Stringer Drape Forming Process

Initial trade studies indicated that pultruded blade stringers, Figure 3-11, using a prepreg material form were more expensive than the draped-formed stringers. Currently, pultruded technologies such as continuous resin transfer molding (CRTM), developed by Ciba Geigy, have shown significant promise for lower cost primary structure. The ability to inject resin into the preform through the pultrusion die increases process control capabilities and reduces waste. Limitations of constant cross-section stringers could be compensated for by producing oversized stringers and then tailoring the web and flange dimensions with sculpture machining. Since the pultruded stringers would be cobonded to the skins, additional costs and risks associated with adequately preparing the surfaces would be incurred. Additional studies, demonstrations, and tests need to be performed to determine which pultrusion materials are suitable for structural application.

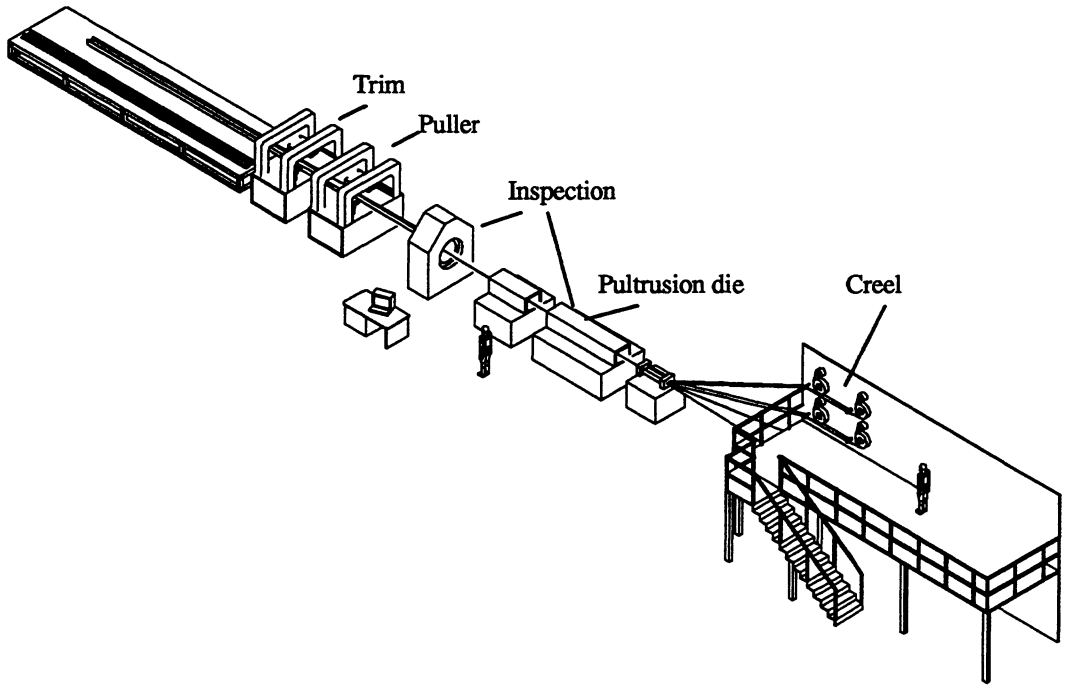

Figure 3-11. Pultrusion Process

3.3.3 Circumferential frames

Trade studies were performed to evaluate several design configurations which included J, I, and Z cross-sectional shapes [3,10]. The J-section can more easily accommodate attachment details than I and Z sections. Additionally, the J-section is not as prone to peel stresses because its web is centered on the bonded flange. The requirement for continuous stringers to provide sufficient panel axial load capability is satisfied by "mousehole" cut-outs in the J-frame.

The RTM work station (Figure 3-12) for the baseline concept would be designed to fabricate the window frames and close-out details for the keel and side sandwich panels, and circumferential frames for all of the quadrant panels. Repeatable dimensional accuracy is critical for cobonding of precured RTM parts with curved skin panels. The required radial tolerance for the crown, keel and side panel frames is ±.010". The fiber architecture, resin, and cure cycle must be properly selected to minimize panel warpage and bond joint voids [11]. When considering RTM processing for J-frames, the RTM tools were designed so that the processing parameters are constant for any frame length.

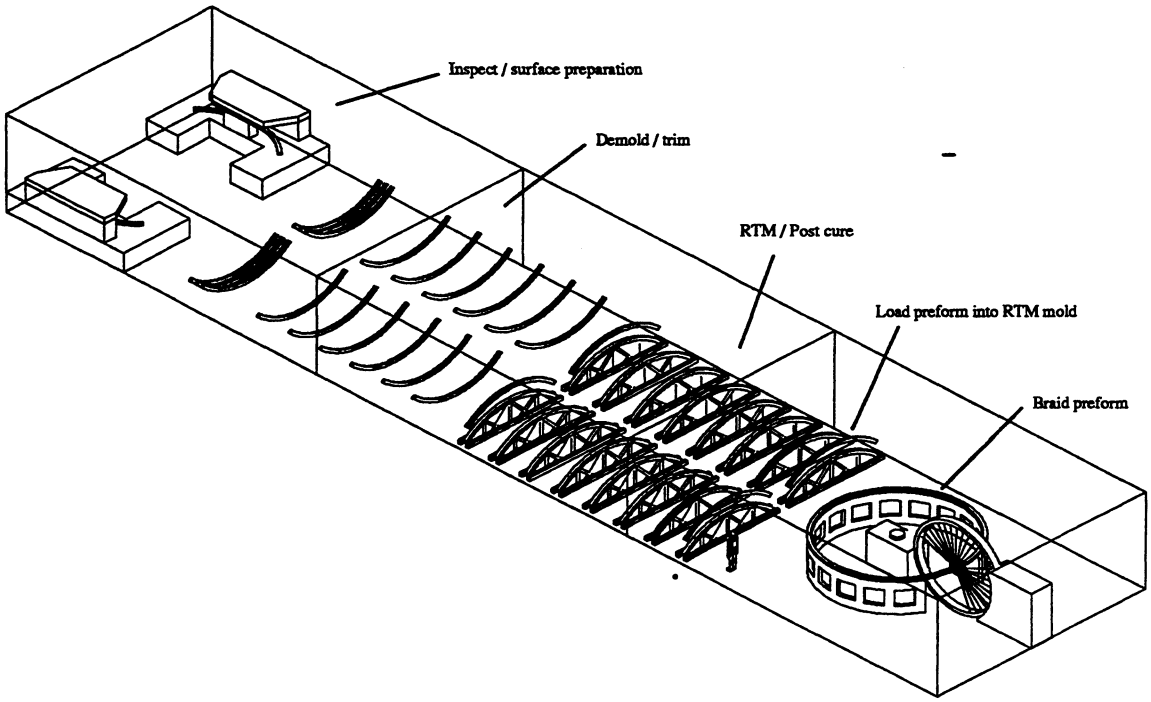

Figure 3-12. RTM Work Station

Fiber orientations in the braided perform required a 144-carrier braider. A typical braiding machine with an automated gantry system can braid up to 4 ft/min of linear preform. An additional 72 carriers were used for axial fiber to produce the triaxial braid architecture shown in Figure 3-13. Currently, braiders need significant down time due to spool size limitations. Increasing the spool sizes to 3-5 lbs would decrease reloading time by 90%. It is predicted that three full-time braiders would be required to produce five shipsets per month of fuselage Section 46 frames.

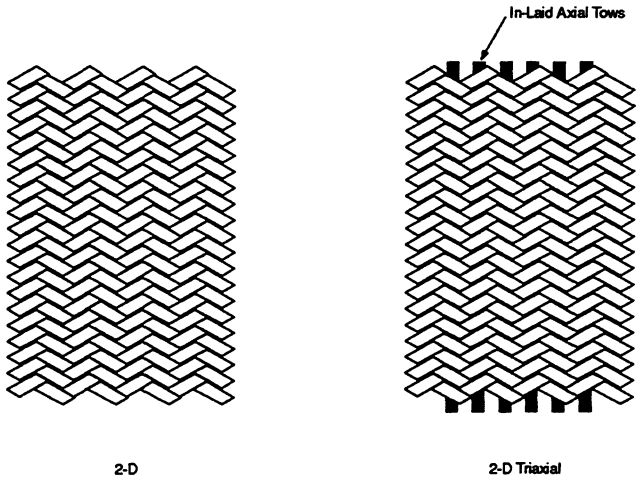

Figure 3-13. Braided Composite Fiber Architectures Investigated by the ATCAS Program.

A transfer system similar to a conveyer belt is used to transfer the mandrels to the braider gantry system. The mandrels are then passed through three braiders in series. A transfer system loads the braided mandrels into the mold cavity (Figure 3-14). To form the bottom frame flanges, plies are cut, folded, and then secured in place with the tool top plate. To minimize unraveling at the preform cut edge, RTM-resin-compatible tackifier is applied between plies at the cut location during braiding. A filler noodle is located in the radius of the bottom frame flanges. Peel ply is then placed on the bottom frame flange and is secured in place by the top mold plate. The mold is preheated, and then the preform is impregnated with resin. After cure, the parts are removed from the mold and trimmed in a dedicated part trimmer. Preparation of the frame bottom flange requires peel ply removal and a solvent wipe just prior to incorporation into the panel bond assembly.

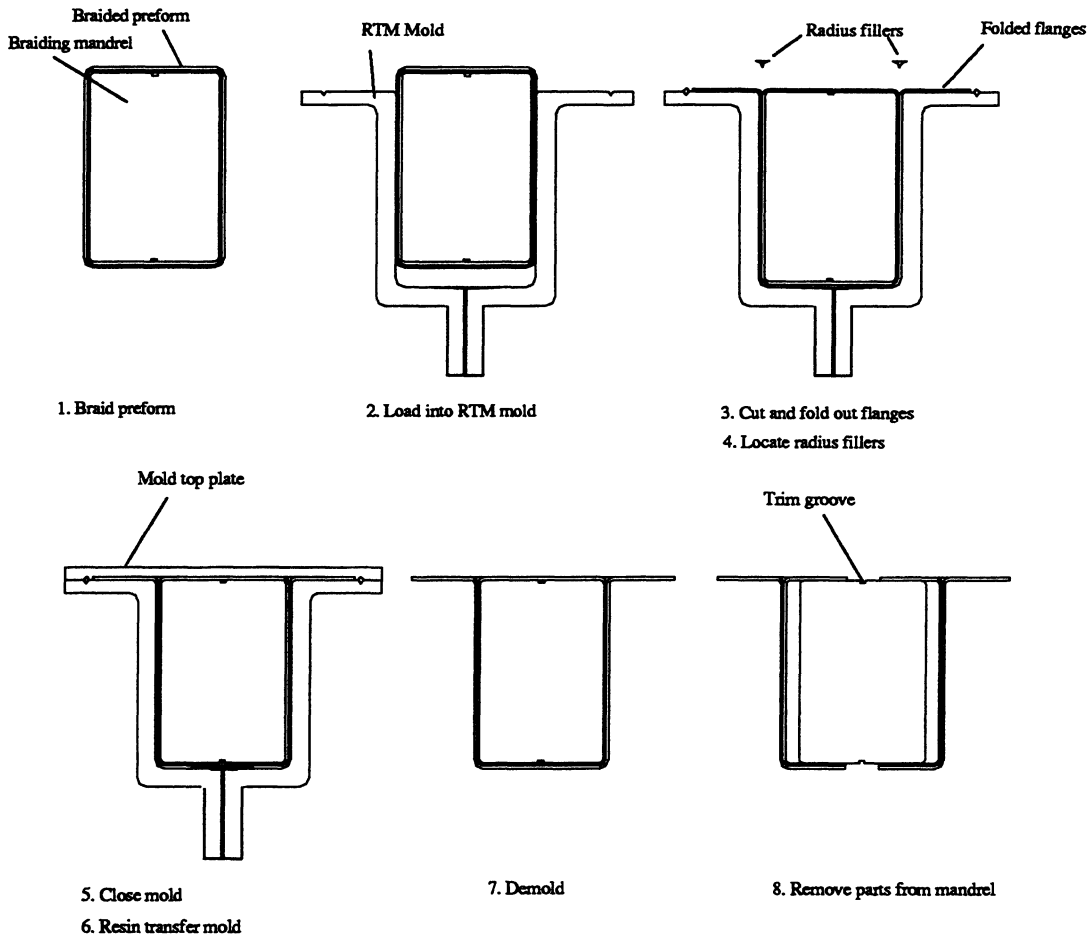

Figure 3-14. Resin Transfer Molding of Fuselage Frames

A frame design that requires an integral failsafe cord can be fabricated in a similar manner with additional tooling complexities as shown in Figure 3-15.

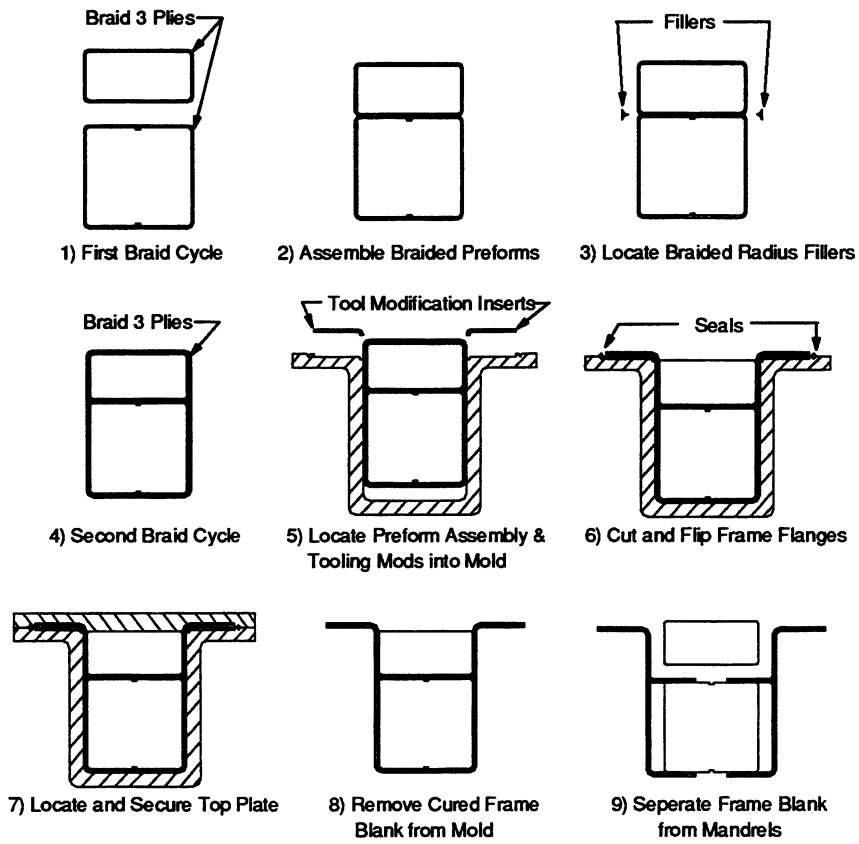

Figure 3-15. RTM of Fuselage Frames with Integral Failsafe Chord

3.3.4 Panel Assembly and Cure Tooling

The producibility of the selected crown design depends heavily on the tooling material to control both panel warpage and contour accuracy. Such control is necessary to minimize gaps and interference fits between elements. One main consideration for tooling types selected for the crown panel was the compatibility of the OML cure tool, stringer tooling, and resin transfer molds. It was predicted that if the same tooling material was used for both the OML cure tool and frame tool, then the mismatch between the skin and precured frame would be reduced during cure. Invar-36, selected from a variety of materials, was selected for the hard tooling because (1) the CTE is very close to that of the composite material (≈1.7 in/in/°F), (2) the need for master tooling, typical for composite tools, was eliminated, and (3) it could be precision machined with standard machining operations. The reusable stringer cure tooling had to accommodate skin thickness variations up to 0.1" and be extractable.

The revised panel assembly process is dependent on the OML cure tool to locate individual panel details (Figure 3-16). First, the AFP skin is positioned onto the cure tool using reference marks from the AFP process. Adhesive is located on the individually drape-formed, uncured stringers. After the stringers are positioned, a contoured caul plate is located over the skin and stringer assembly to compact the stringers to the skin while maintaining stringer location. Next the frames are located by fixtures mounted around the tool perimeter. The flexible IML cauls are located

located between each frame, covering the uncured skin and stringer laminates. Inserts installed at each frame-stringer intersection transfer uniform autoclave pressure to the stringer and prevent cure bag bridging conditions. The reusable cure bag design incorporates molded-in vacuum and temperature ports, contour at the frame locations, and a textured inner surface to provide uniform breathing during cure.

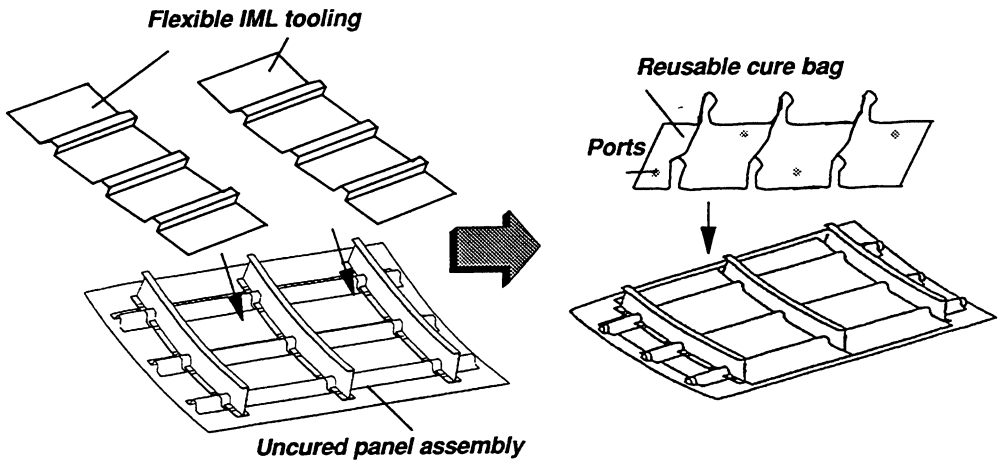

Figure 3-16. Panel Assembly

The cure cycle process parameters for the Fiberite AS4/938 system is a 350°F cure with maximum autoclave pressure of 85 psi. Dry peel ply is used between the tool and skin to act as a breather and prevent air entrapment as well as volatile entrapment. Volatile entrapment is a concern due to the solvated impregnation process used for tow material fabrication.

3.4 Manufacturing Issues

Verification of manufacturing technologies through demonstrations is necessary to demonstrate cost-effective composite structures and to evaluate manufacturing risks and structural performance. Table 3-5 identifies risks and issues associated with crown panel fabrication. One of the main challenges of the selected global crown panel concept was bond integrity of a precured frame cobonded to a stiffened-skin panel, yielding acceptable panel contour and tolerances.

Table 3-5. Manufacturing Risks for Crown Quadrant Panel Fabrication

Technology	Issue
AFP	• Process efficiencies need to exceed 25 lbs/hr with less than 10% scrap rate • Need to determine effects of defects and process variation (i.e., lap/gap, fiber waviness, add/drop accuracy) • In-process measurement of anomalies and subsequent compensation methods need to be defined and verified. • Process reliability
AFP TOW MATERIAL	• Inconsistent tack and impregnation quality severely impacts process efficiencies. • Variation of tow width and thickness increases risks associated with panel bond assembly tolerance requirements. • Large panel fabrication will require significant material outtime life capabilities (min.> 30 days out life)
DRAPE FORMING (Stringers)	• Structural performance is related to accurate fiber orientation and gage thickness control. • Minimize fiber distortion during draping process • Tooling for trim, handling, and locating full-scale uncured stringers needs to be developed.
RESIN TRANSFER MOLDING (Frames, Splices, details)	• Develop process parameters for RTM with Shell 1895 • Process control / SPC methods are not currently used for part producibility. • Use of peel ply in RTM process to reduce frame flange surface preparation work. • Low-cost process and tooling for tailored frames has not been proven (i.e., thickness variation) • Inspection standards and methods have not been established for precured textile structure. • Tolerance control of frame flange contour (+-.010") • Tool design compensation for frame flange spring in/out
PANEL BOND ASSEMBLY	• Methods to transfer and locate large skins and stringers without inducing anomalies (i.e., wrinkling, skin thickness variations due to AFP lay-up patterns). • Methods to control or compensate for tolerance stacking in critical locations (i.e., frame and stringer bond regions) • Panel shrinkage, fiber distortion due to cobonded elements. • Cure cycle process control needs to be developed to minimize warpage and attain uniform panel cure • Optimal surface preparation for cobonded elements is required for structural performance.
TOOLING	• Reduce recurring material costs through reusable bagging systems • Tooling that minimizes warpage. • Develop AFP winding mandrel for panel assembly • Tooling flexibility to compensate for load-induced design changes will require verification through multiple panel demonstrations. • Semi-rigid IML tooling concepts at full-scale need to be verified to ensure stringer location control and gage thickness variations • Production durability and cost benefit of the reusable cure bag system needs to be verified .

Figure 3-17 shows the tolerance requirements associated with major structural elements in the crown panel configuration. Contour deviations in excess of 0.008" typically require shimming on assembly unless acceptable preloads can be applied to eliminate the gap without jeopardizing structural performance. Typically, liquid shims are used for gaps less than 0.030", while gaps in excess of 0.030" are filled with a combination of liquid and hard shims. Both methods are labor intensive and require fixtures for gap checks.

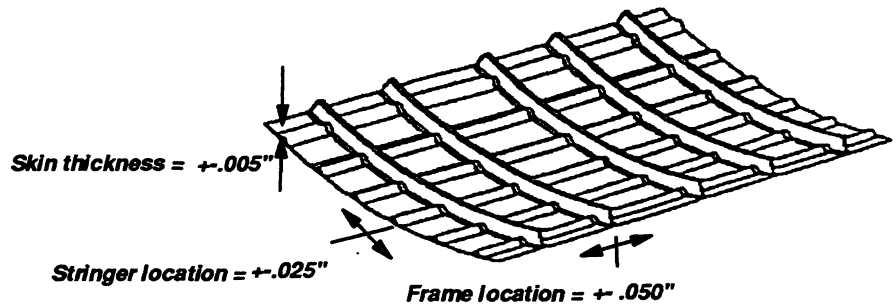

Figure 3-17. Tolerance Stacking Potential for Crown Configurations

3.5 Process / Tooling Developments

Manufacturing demonstration panels were identified to assess manufacturing risk and technology readiness for fabrication of the crown panel, and to verify cost for the baseline configuration. Innovative cure tooling concepts were optimized through a series of tool trials to reduce manufacturing risk and increase the part quality/performance. Scale-up issues were considered to ensure that manufacturing concepts demonstrated on small panels could be reproduced on large panels without increasing manufacturing risks. Several types of manufacturing demonstration panels were identified to validate the tooling and complex bond process. Figure 3-18 represents major process and tooling development activities. Initial development activities focused on cure tooling. This was followed by fabrication of subscale panels to demonstrate integration of the tooling and low-cost manufacturing and assembly processes. The subscale panels provided information to improve follow-on demonstration tooling and manufacturing processes. They also provided information which facilitated production of more dimensionally stable structure. The development of the crown panel fabrication process is discussed in detail in [3], [12], [13], [14], and [15].

Several flat and curved panels were fabricated to develop the flexible IML tooling concept. Selected tooling designs were demonstrated with 3' x 5' configured panels. These panels also facilitated evaluation of additional processing technologies such as AFP skins, drape formed stringers, RTM frames, and panel assembly and cure. Optimal tooling designs were further verified through multiple panel fabrication, with panels fabricated up to 7' x 10'. The panels included variable materials, panel design details, and skin and stringer layups. Details of the IML and mandrel tooling are discussed in [13] and [14]. Several 7' x 10' panels were constructed which included design variations of stringer spacing, pad-ups for bolted circumferential frames, lay-up orientation, and material type as discussed in [16]. Repetitions of manufacturing demonstration panels were critical for evaluation of processing anomalies, impact of design variations, and cost data to support full-scale cost/manufacturing/performance prediction models.

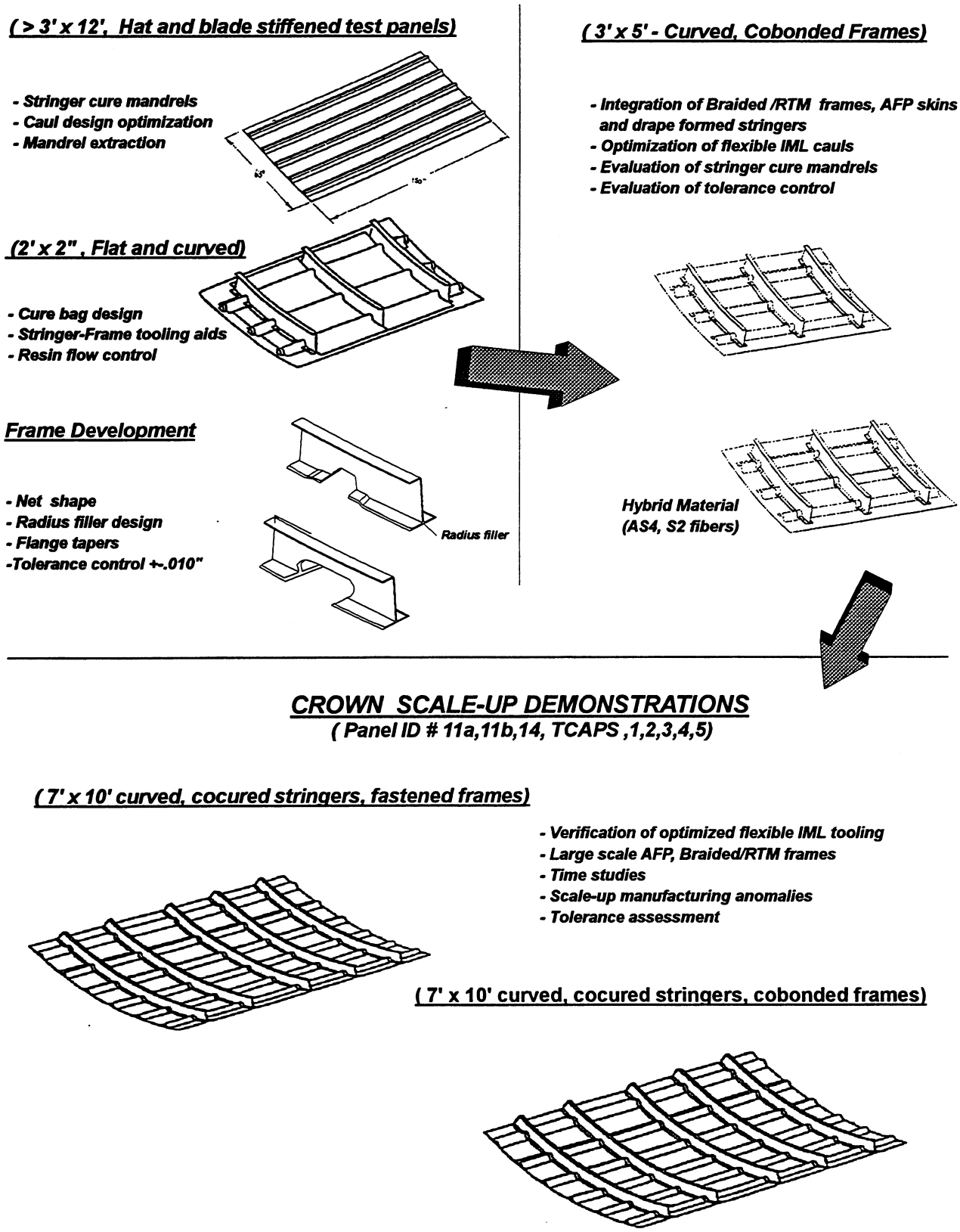

Figure 3-18. Crown Process Development Activities

3.5.1 AFP Skin

During the development efforts for AFP fabricated skins, laminate quality and efficiency were evaluated. Fiberite AS4/938 and S2/938 tow materials were used to fabricate curved and flat panel configurations. One AFP process advantage over ATL machines is the ability to produce laminates with several intermixed fiber types such as AS4 and S2 fibers. Figure 3-19 illustrates one of the curved panels used for developing tooling and panel assembly processes. The AFP process for the crown utilized the Hercules BCA head since ply tailoring requirements were minimal. The TCA head was used for keel and side panels due to the perceived need for considerable ply tailoring (Sections 4.5 and 5.5). By evaluating test panels with variable processing parameters such as lap and gap conditions between bands, ply orientation, band edge location, and variation in laminate thickness, it was seen that these variables could impact structural performance (Figure 3-20). As an example, crown panel test data suggests that if the band edges of like orientation plies are aligned through the thickness, mechanical properties such as tension notch sensitivity could be affected [3, 4].

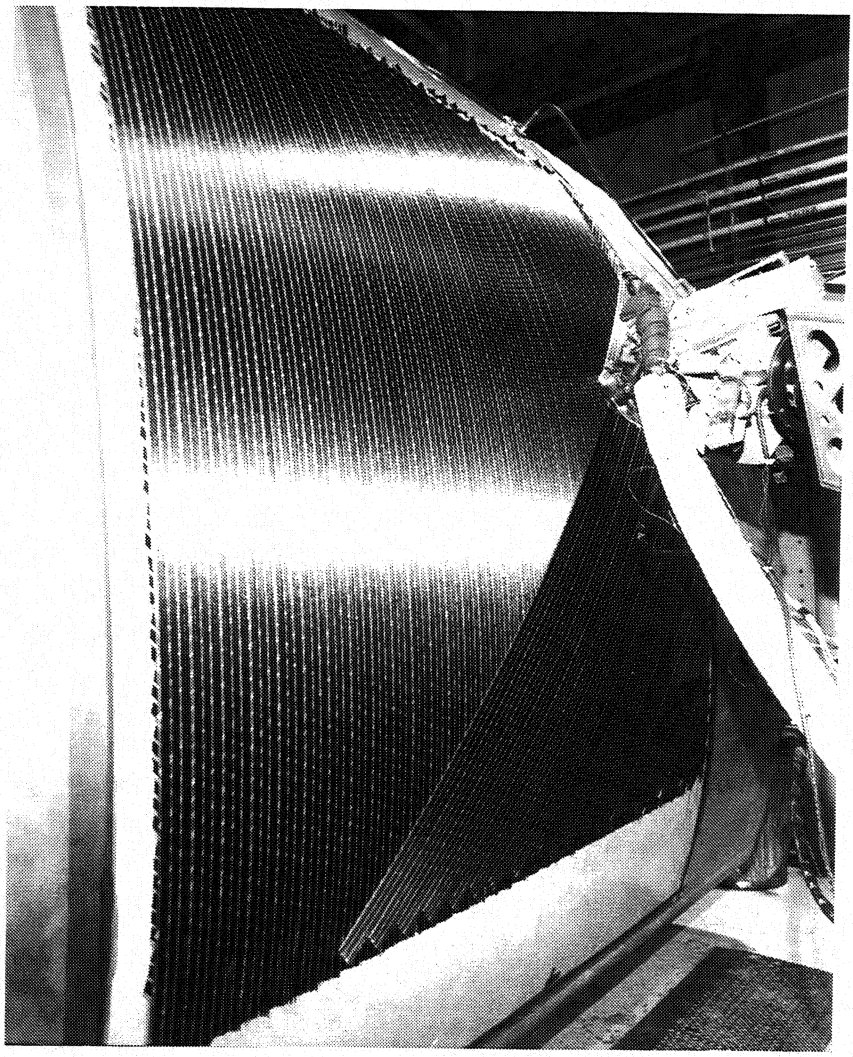

Figure 3-19. Construction of Hybrid Material Skins Using the AFP Process

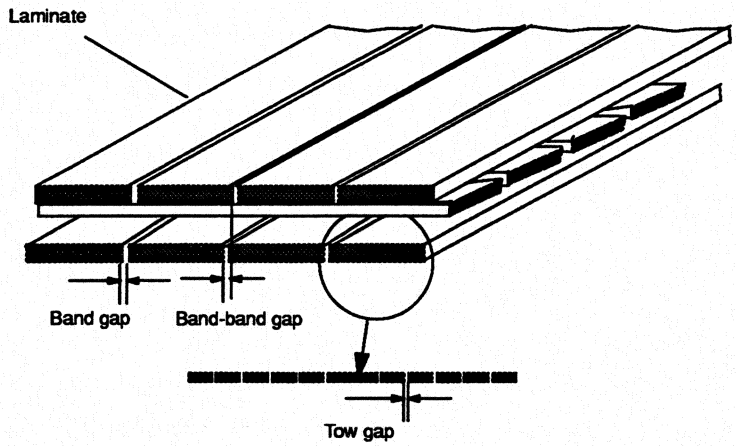

Figure 3-20. Band Stacking, Tow Gap, and Band Gap Measurements

Typical laminates are constructed to ensure that the edges of the band or tape are offset through the thickness to prevent gaps resulting in laminate voids. The ATCAS crown panels were designed so that the bands were preferentially stacked through the thickness. An initial lap and gap requirement of ±0.030" was set based on tolerance control capabilities of the AFP machine six axes. Large lap and gap variations were most common near the panel edge due to a lack of tension as material paid out over the compact roller. Band lap and gap averages of less than ± 0.010" were common on crown manufacturing demonstrations. The gap conditions between bands in the crown panels did not create cured laminate voids since the high flow resin system (Fiberite AS4/938) flowed into the gaps during cure.

3.5.2 Stringer

Hat stringers with lengths in excess of 15 feet were constructed from both tape and tow material. These were drape formed into hat section contours to determine tooling requirements, draping and trimming process parameters, equipment needed for stringer transfer, and accurate location methods for panel assembly. Initial development activities focused on draping a laminate charge over a male tool. The formation of the laminate into the hat section required that individual plies would slip relative to each other. A heat source was used to drop the resin viscosity enough for ply slippage without inducing wrinkles. Typical heating requirements for the Fiberite AS4/938 material system were 120-150°F for 10 minutes. While the charge was at temperature, vacuum was applied, drawing the laminate charge over the contour of the stringer tool. This process required a secondary heating and forming step with a female overpress tool to eliminate bridging near the stringer base. In addition, the laminate charge could only be secured at the ends, with no restraints to prevent laminate movement. Once the stringer charge was formed, it was trimmed and transferred onto the stringer cure mandrel.

Significant process control and cost improvements were gained through the use of heated female tooling as described in Section 3.3.2. Fiber orientation of the stringer charges was controlled to within ±2°. The use of the silicone stringer cure mandrel as part of the forming tool reduced usage of recurring materials (peel plies and other release films). The flexibility of the silicon

improvements were made by designing the edges of the drape forming tool for trimming the stringer charge with a 30° edge (Figure 3-21). The drape tool was also designed to transfer and locate the stringer charge on the uncured skin.

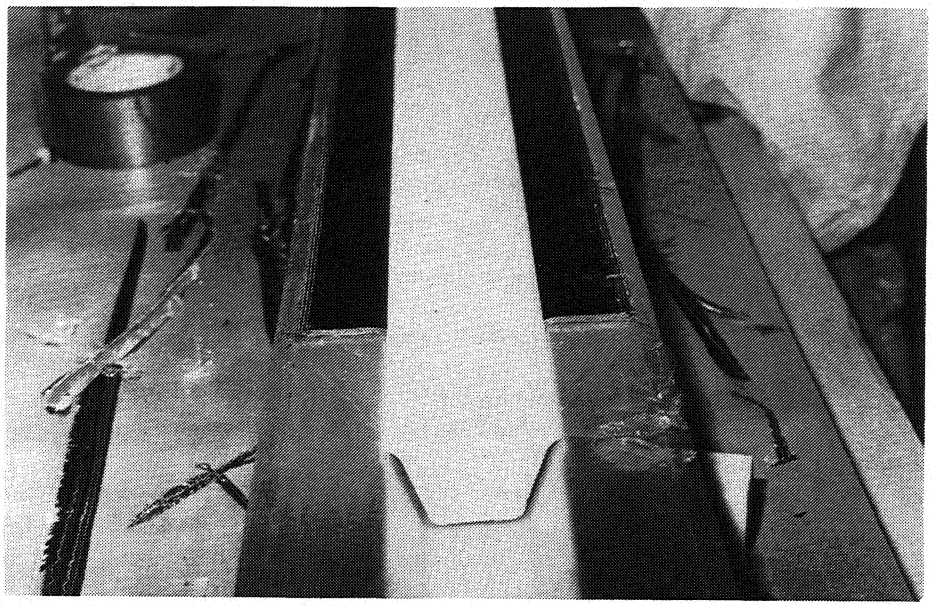

Figure 3-21. Formation and Trimming of Hat Stiffeners

3.5.3 Circumferential Frame

Braiding and RTM were considered the most cost efficient means of frame fabrication due to the advantage of low cost material forms [3]. Development efforts for RTM frames with braided preforms focused on (1) selection of the resin/fiber system, (2) control of preform variation, (3) RTM tool design, (4) cured part dimensional accuracy, and (5) cost analysis with a detailed database. The development activities are described in more detail in [12], [13], and [14]. Flat and angle coupons were used to determine properties of various architecture and to develop RTM processing parameters. This data was used to design a three-foot-long circumferential frame to evaluate batch mode processing, flange spring-in and RTM tool injection port designs. Evaluation of the three-foot-long frame demonstrations helped optimize processing parameters and design-tooling modifications for the eight-foot-long frame fabrication (Figure 3-22).

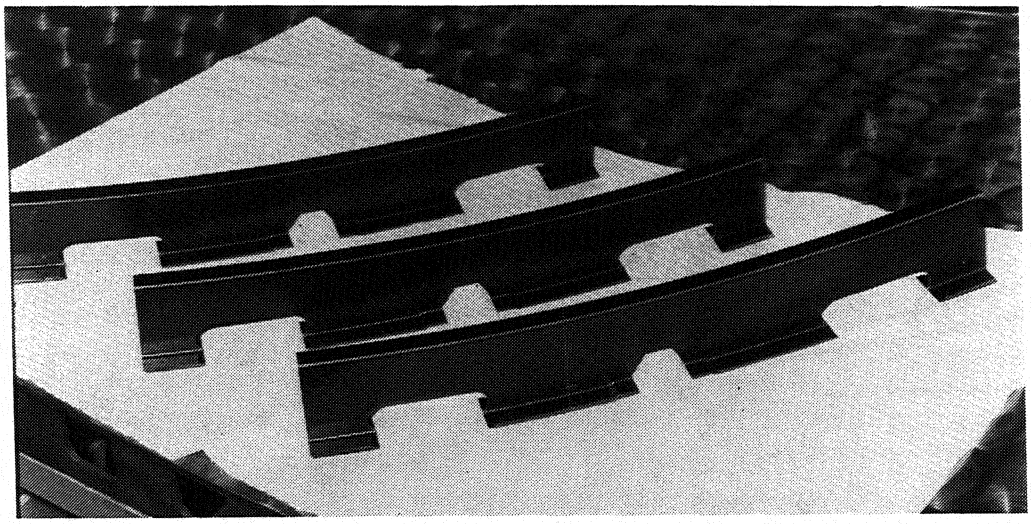

Figure 3-22. Development of Circumferential Frames

The development of braiding and RTM technology for primary structure fuselage required significant testing of coupons with various architectures [12]. Various types of braid patterns, 2-D, 2-D triaxial, and 3-D were investigated. AS4 fiber in a tow form was selected for development based on previous experience which produced minimal fiber damage during braiding. Fiber damage during braiding sometimes occurs due to small radius tows under tension, combined with excessive abrasive wear on the tows as they are braided and compacted together. To minimize damage, the tows are slightly twisted (one twist/linear foot) which also reduces airborne broken fibers. The preform consisted of six plies of triaxial-braided AS4 fiber including 6K fibers braided at ±66° with inlaid 0° axial tows. A swing arm was constructed to drive the braiding mandrel through the center of the braider at a controlled speed to maintain fiber orientation (Figure 3-23). Figures 3-24 and Figure 3-25 show the fabrication process steps for the frame.

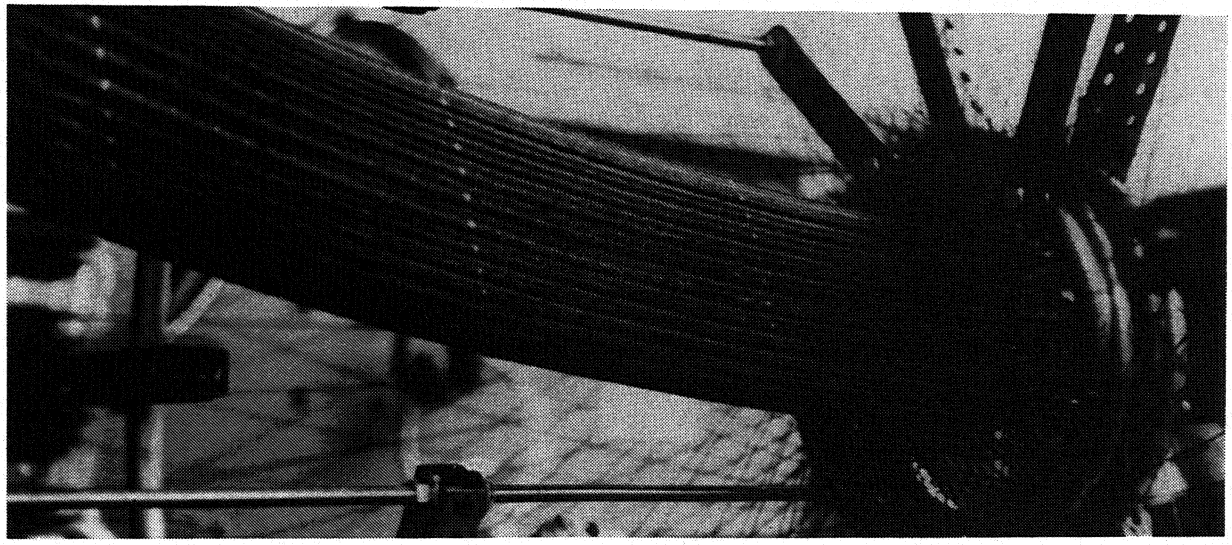

Figure 3-23. Three-Foot-Long Frame Demonstrations

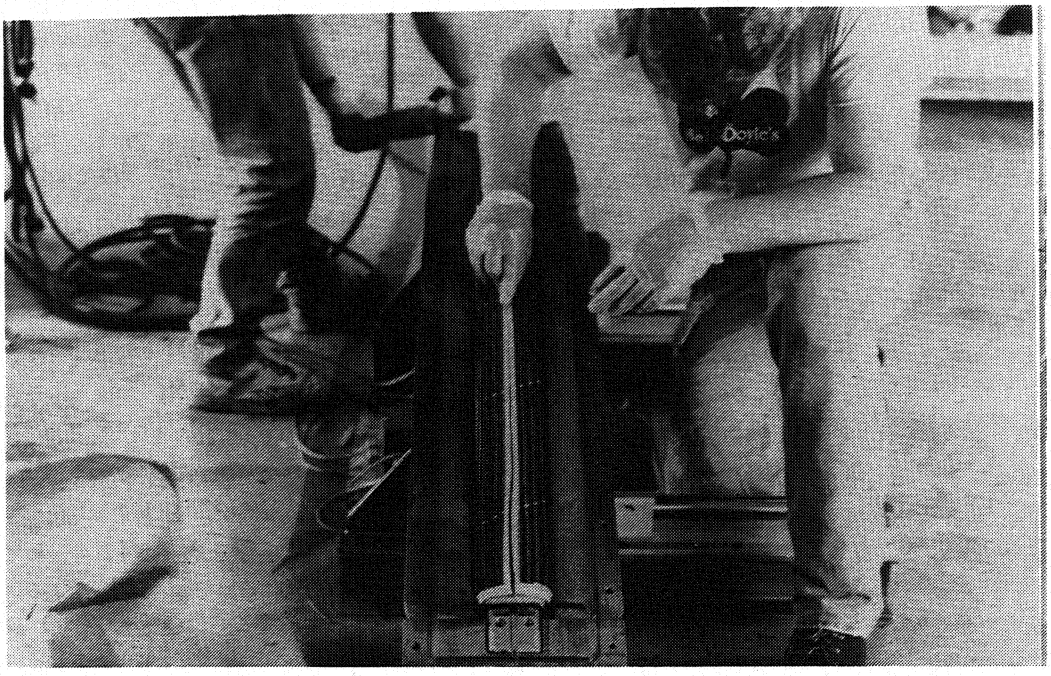

Figure 3-24. Location of Preform and RTM Tool Closure

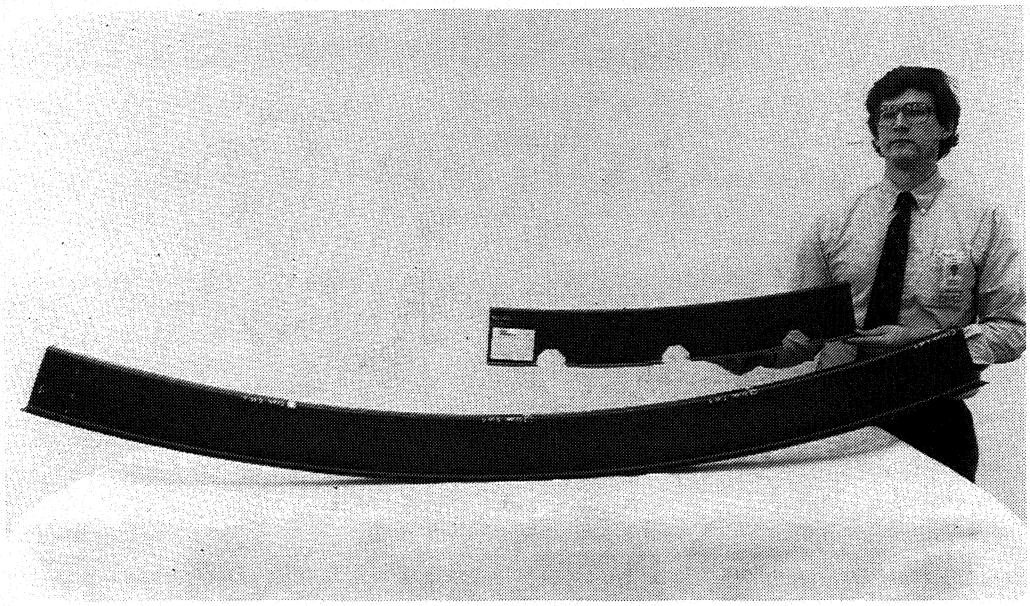

Figure 3-25. 3' and 8' Circumferential Frame Demonstrations

Shell's DPL-862 epoxy resin was selected for early RTM evaluation and mechanical property characterization because of its low cost and known manufacturing properties (rheometrics). However, initial testing results of the DPL-862 showed inadequate structural performance. In addition, the resin system was unable to withstand the additional 10 hours of 350°F when the precured frame was cobonded to the skin. An improved Shell epoxy system, RSL-1895, which was designed for RTM processing and possessed adequate post-cure properties, was selected instead for further development [10,12]. This resin system also had the desired pot life of one hour with a viscosity of less than 50 centipose to ensure full impregnation of a 16-foot-long frame. An alternative resin system formulated specifically for RTM was 3M's PR-500 fluorinated epoxy. PR-500 is designed as a one part system for extended storage life and ease of cleaning. Lockheed selected this material for development of circumferential keel and side frames under their ACT contract [18].

Fabrication of the three-foot-long frames was used to evaluate batch mode processing, optimization of the RTM and braiding processing parameters, and to help improve tool design. The 3' RTM mold was designed to minimize fiber distortion and meet the desired fiber orientation tolerance of ±2.5°. To reduce fiber distortion or fraying at the cut edge, or fiber distortion at the point of folding, tackifier is applied to each individual ply at the cut region during braiding. The braiding mandrel was designed as part of the RTM tool so that the preform did not have to be removed from the mandrel, thus reducing risks of fiber distortion. Once the braided mandrel was located into the RTM tool cavity, the side mold walls were closed thus securing the preform from movement (Figure 3-26). The split mold design eliminated the need for tapered side mold walls. With the mold closed at the sides only, the frame bottom flanges were formed by cutting and folding the first three plies. The bottom flange preform was completed by the placement of filler noodle. To prepare the bottom frame flange for cobonding, a peel ply was located onto the preform prior to final mold closure. The mold top plate was designed to apply tension to the cut plies to avoid ply movement during resin transfer molding.

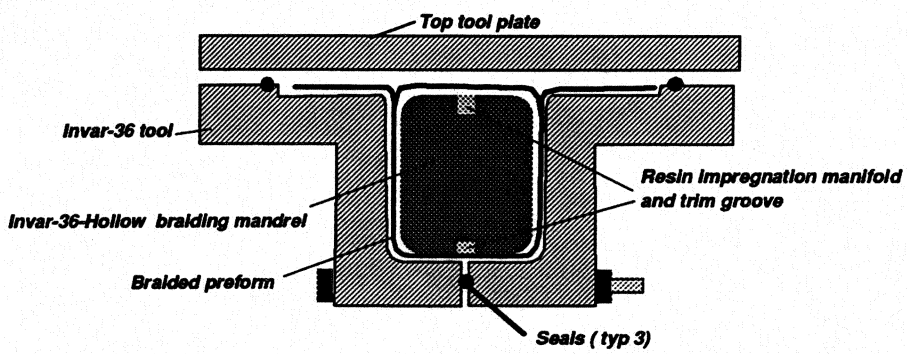

Figure 3-26. RTM Frame Mold Design

The tool was designed for resin impregnation to be independent of the frame length. The lower port of the RTM tool was connected to the resin feed system and the upper port was connected to a vacuum source. The mold was preheated to 250-280°F and the resin was preheated to 180-200

°F. After the mold cavity reached full vacuum, resin was injected at 40-90 psi into the mold through the lower port with vacuum assistance from the top port. Vertical positioning of the tool proved essential in avoiding dry spots in the preform. The use of a carbon veil on the tool surface improved preform wet-out and minimized surface porosity. Similar to cure of laminates, the resin transfer molding operation had to achieve full wet-out conditions to satisfy the void content objective of less than 2%. Typical injection time was under 15 minutes. Once the resin filled the mold cavity, the vacuum was relieved and the mold was pressurized for final cure. The cure cycle consisted of a gel stage of 30 minutes at 300°F and 90 minutes at 350°F. A freestanding post cure of two hours at 350°F was not necessary since the frames were subjected to these conditions during the subsequent panel cobonding process.

The process was optimized for circumferential frames with Shell's RSL 1895 resin. Three styles of 2-D triaxial braid architecture were pursued [10,12]. Additional flat mechanical test panels were fabricated along with a series of three foot-long frames. Improvements in the preform handling procedure reduced variations in braid angle to within the desired ±2.5° in mechanical test panels. The quality of the test panels and frames was evaluated with non-destructive and destructive techniques. Fiber orientation in mechanical test panels were evaluated by surface measurements and radiographic inspection (x-ray opaque tracer yarns were included in fiber preforms). Pulse echo and TTU (through transmission ultrasonic) inspection methods were used for detecting porosity and voids in braided composites. TTU inspections at 6, 12, and 18 db levels were used to determine differences between the response signatures of voided areas and areas with high and low fiber volume [10,12,13]. Fiber volume was found to be within 5% of the target value of 55%. Void volume was reduced to ≤ 0.5% with the RSL 1895 resin. The quality of three foot-long manufacturing trials were found to be consistent with the flat mechanical test panels.

Figure 3-27 shows dimensional tolerances for the 3 foot-long frames. Gage thickness and contour meet the tolerance criteria. Spring-in of the bottom flange varied from 0°-1° depending on the type of radius filler used and the amount of fiber distortion. The fiber distortion resulted from preform mishandling and tool closure. The spring-in due to the Narmco (now CYTEC) MetlBond 1515-3M adhesive noodle was 1°, twice as much as was demonstrated with the braided AS4 fiber filler. The amount of web twist that resulted in the frames required only 2 lbs load to return the frame to nominal position.

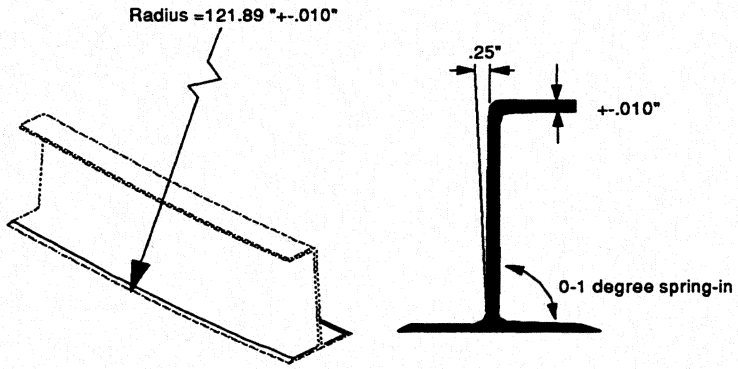

Figure 3-27. Tolerance Control of the 3 Foot-long Frames

A finite element model of the 3 foot-long aluminum RTM tool was used to predict frame contour at elevated temperatures, and associated residual stresses in the part. Tool radius was 122.34" at 350°F compared to the required 121.9" at room temperature. For a 16 foot-long frame, gap conditions between a IML skin and frame cured on an aluminum tool would be in excess of 0.300" (Figure 3-28).

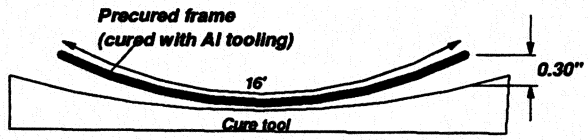

Figure 3-28. Effects of Tooling Material On Frame Radius

The use of aluminum or steel tooling would therefore induce significant residual stresses in the part during cure and cool down, and possibly damage the part. The use of these materials would require removal of the cured frame elements from the RTM tool before cool down. This method would also require a modified tooling radius to account for the change due to temperature and frame shrinkage. Invar-36 was selected for the eight foot-long RTM tool. Since Invar-36 has a slower heat up rate than steel or composite, additional heat sources had to be used for the RTM cure cycle which had heat-up rates of 1-3°F/min.

The RTM process used for the three foot-long frame fabrication was also used for the fabrication of the eight foot-long frames. Resulting flange spring-in was 0°, indicating that RTM tooling made with Invar-36 material would not require spring-in compensation for this preform architecture. The web twist was 0.1° compared to the 2.7° twist measured on frames made with the aluminum tool. The radii of the frame flanges were within the dimensional tolerance of ± .010". After the flanges and mouse holes were cut out of the frame, residual stresses influenced the frame to change from 121.89" to a 123.00" radius. Assembly loads of less than 20 lbs, distributed evenly over the frame length, were used to compensate for this out-of-tolerance condition and press the frames to the uncured skin.

Inspection of the frames with TTU techniques at six db indicated long narrow anomalies running parallel to the axial fibers. Photomicrographs were compared to TTU results from various sections of the frame. In areas where white axial streaks were present in the photomicrographs, the axial fibers from each ply were aligned to form resin-rich areas and high-fiber-volume areas (Figure 3-29, 3-30, and 3-31). This significant variation in density produced TTU indications similar to a defect. Figure 3-30 shows the alignment of axial tows which produces resin rich areas as indicated by the TTU'd transmission loss. This was common of the eight foot-long frame demonstrations. Figure 3-31 shows the nesting of braided plies, resulting in a more nested configuration which was common near the ends of the frames. The photomicrographs also showed no signs of porosity or internal microcracks.

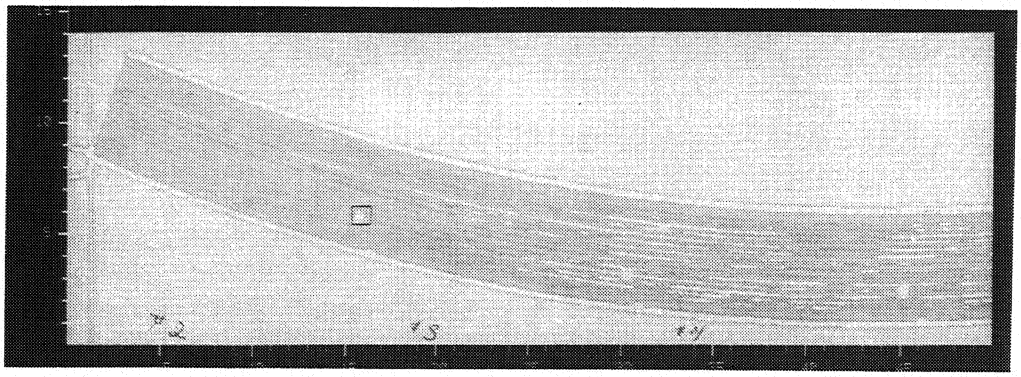

Figure 3-29. TTU of RTM Frames (6 db loss)

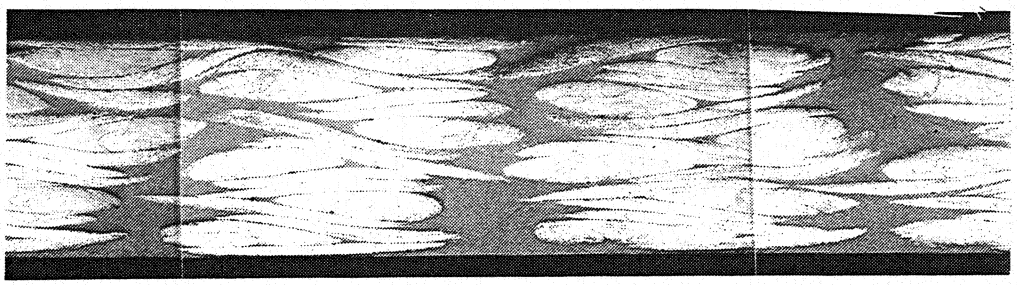

Figure 3-30. Cross-Section of Frame with Stacked Axial Yarns

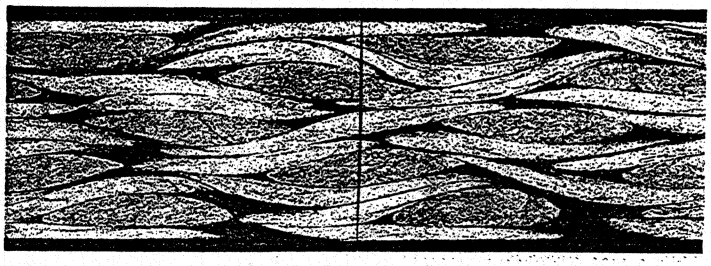

Figure 3-31. Cross-Section of Frame with Nested Axial Yarns

3.5.4 Panel Assembly and Cure Tooling

Panel assembly and panel cure were accomplished on an 8' x 12' OML cure tool as shown in Figure 3-32. The 5000 lb tool was constructed from Invar-36 steel plate welded together and machined to within ±0.010" of a 122" radius cylinder. Features were designed in the tool to monitor tool contour and detail locations. The average tool surface deviation was -0.001", with three standard deviations of 0.011"- close to the typical engineering tolerance requirement of ± 0.010" (Figure 3-33). One lesson learned through use of this OML cure tool was that special attention is warranted to carefully design the cure tool substructure to support contour during cure.

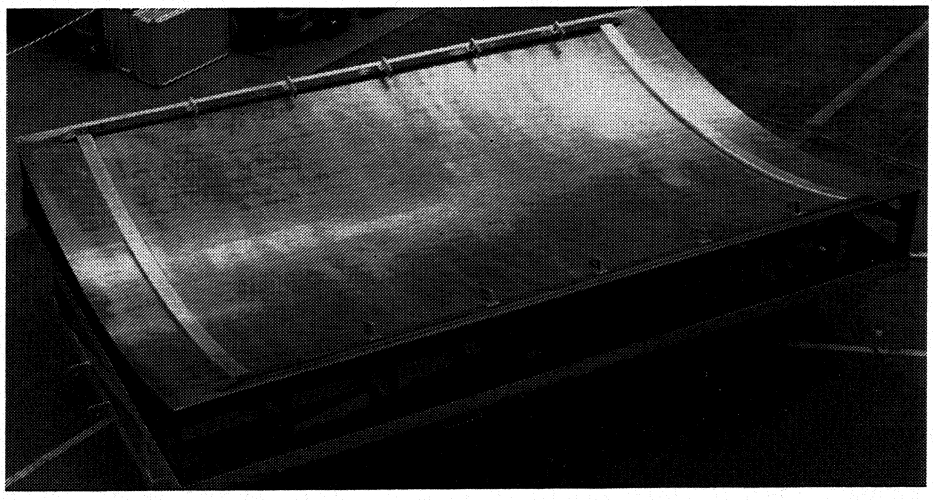

Figure 3-32. OML Cure Tool

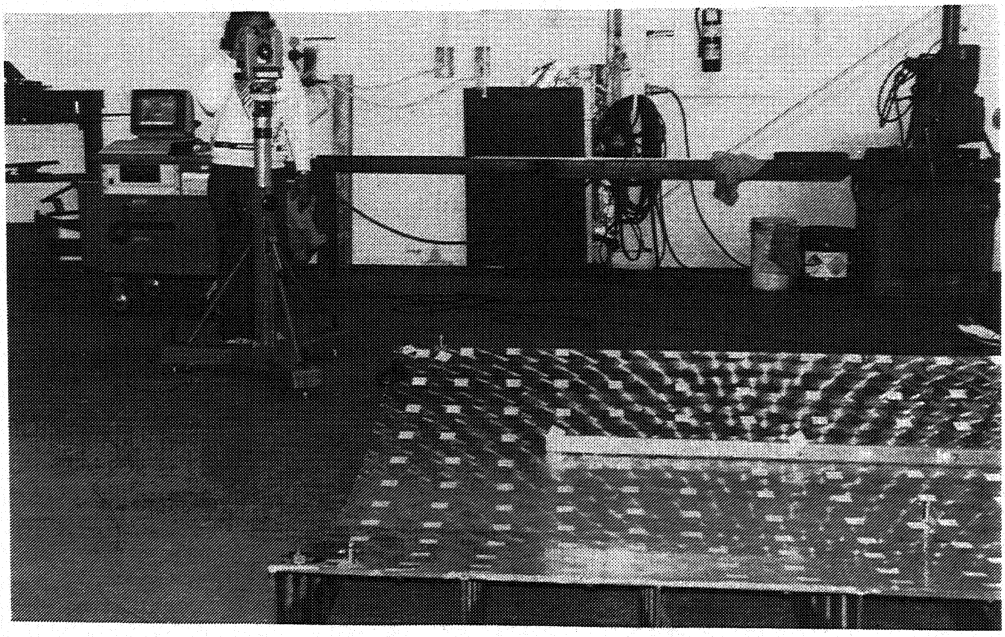

Figure 3-33. Contour Measurements of OML Cure Tool (CATS Inspection System)

Flexible IML tooling was designed to minimize labor and recurring material cost for panel assembly and cure preparation. The IML tooling was required to debulk the laminate during cure, control resin flow, and maintain the stringer location and shape. Early demonstrations using the one-piece IML tooling approach showed inadequate control of frame and stringer location, and resin flow. Through a series of tooling trials the IML flexible tooling was developed [13,14, and 15]. The flexible IML tooling was redesigned as separate flexible cauls that nested between frames (Figure 3-34, 3-35). The individual cauls were constructed of four plies of graphite/epoxy fabric and one ply of Viton TX-4402 rubber, a fluorelastomer. The flourelastomer was treated with a layer of FEP, eliminating the cost associated with the application of release material. The FEP-surfaced caul did not require the use of additional breathers to produce parts of acceptable quality. Flourelastomer have proven to be more durable than silicone or other rubber products since they are more resistant to epoxy reactions. Further evaluation of the FEP surface durability is required to more accurately determine the cost benefit of these reusable cauls.

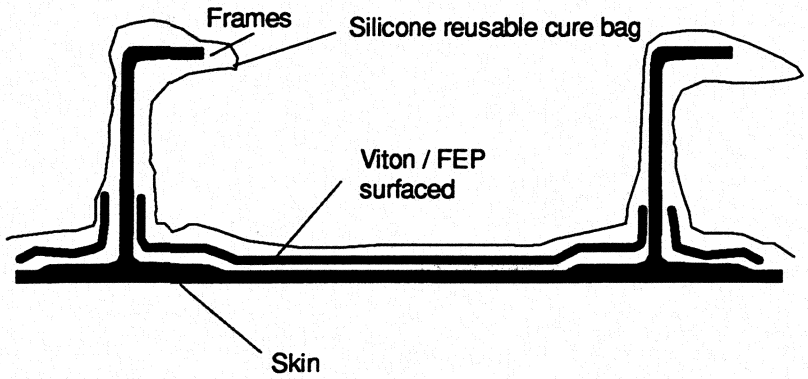

Figure 3-34. Flexible IML Tooling

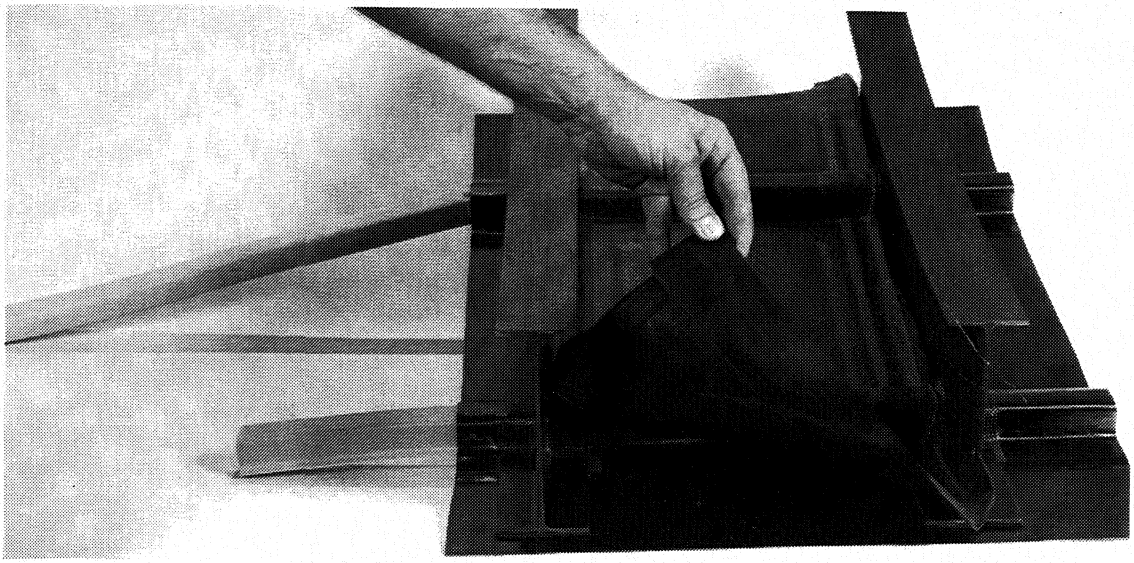

Figure 3-35. Flexible IML Tooling Trial

One of the critical caul design features was to control resin flow for both low-and high-flow material systems. Initial caul designs were affected by improper caul fit-up which created a bridging condition, and resultant resin flow paths (Figure 3-36). Demonstrations also indicated that excessive resin flow from the cured skin onto the frame flange influenced how much the frame was depressed into the skin during cure.

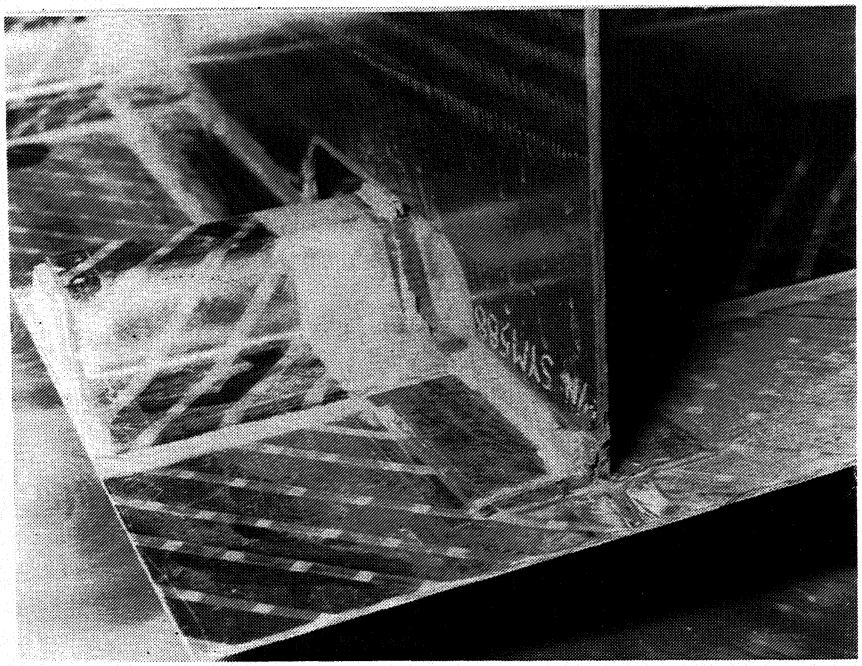

Figure 3-36. Resin Flow From Improper Caul Fit

To minimize resin migration, the edges of the cauls were designed to seal against the frame flange and not the frame web. Control of resin flow at the frame/stringer intersection was increased by developing a composite hat-shape tooling aid which covered the stringer section (Figure 3-37). This tooling-aid prevented significant tooling mark-off where the cauls overlap at the frame-stringer intersection. Since the cauls were less than 0.100" thick, a low cost flat metallic mockup of the crown panel IML contour was used for IML tool fabrication (Figure 3-38).

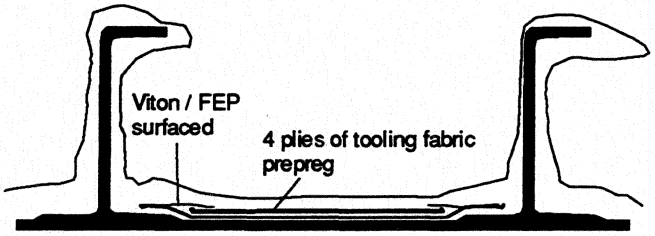

Figure 3-37. Improvement of Resin Flow Control in Frame/Stringer Intersection

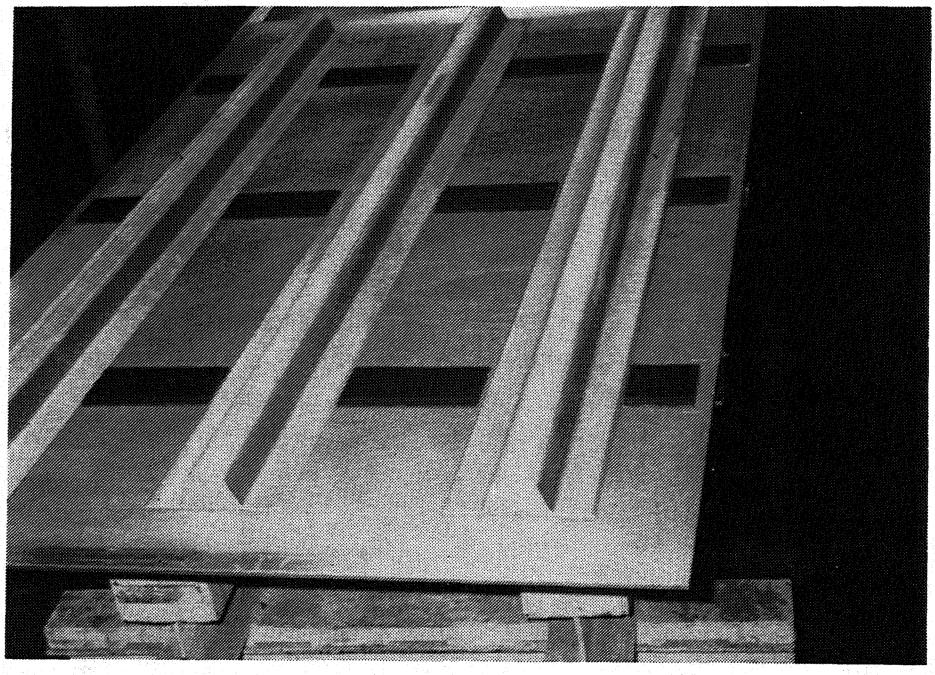

Figure 3-38. Flexible IML Tooling Mock-up

The contour of the flexible IML tooling had to be modified to accommodate the growth of the stringer mandrel during cure. An undersized hat cavity in the IML tooling would cause the stringer mandrel to lift the caul, preventing adequate pressure during cure at the base of the hat stringer. Oversized hat cavity dimensions would prevent cure pressure on the top and sides of the hat as shown in Figure 3-39. Tooling demonstrations showed that the net shape hat dimensions in the IML tooling needed to be enlarged by 2/3 of the stringer cure mandrel growth at 350°F. This was because the resin needed pressure during gelation. Due to heat transfer limitations, the mandrel did not reach maximum growth until late in the cure cycle. The growth correction factors were dependent on the laminate resin type and tool heat-up conditions.

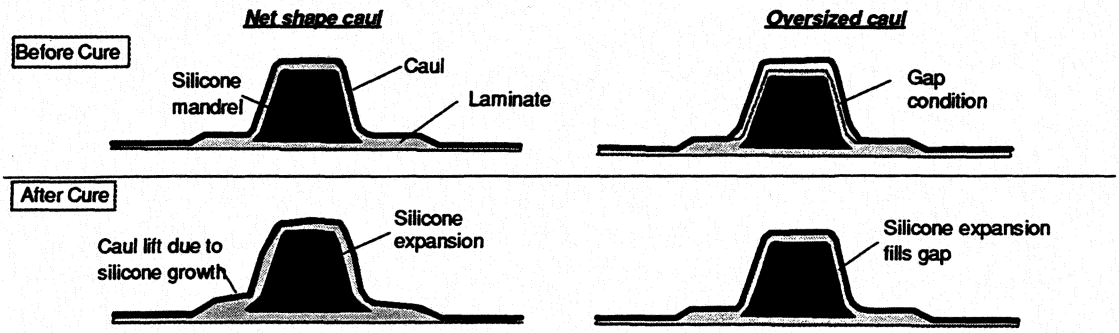

Figure 3-39. Development of Flexible IML Tooling

The use of lower-expansion stringer cure tooling was predicted to produce crown panels with better dimensional tolerance control. A flexible metal mandrel with a CTE of less than 10% of the silicone mandrel produced tolerance control improvements, compared to the silicone mandrel cured parts. The flexible low-CTE mandrel was composed of individual metal laminates which were stacked and held together in a silicon bladder and could be designed for any CTE. Aluminum material was preferred to ensure that a gap allowance of more than 0.015" existed after cure for mandrel extraction.

Tolerance control of the hat shape and laminate thickness was improved by using an alternative hat shape silicone bladder filled with a flexible medium which became rigid under vacuum. Autoclave pressure, fed into the bladder, ensured that the hat stringer had uniform pressure during cure. After cure, the vacuum in the bladder was released easing mandrel extraction. Figure 3-40 shows the tolerance control of the individual mandrel systems. Success of the bladder mandrel system was not fully developed in time for the 7' x 10' panel demonstrations. Use of silicone mandrels with flexible IML tooling contour modifications proved sufficient for stringer location accuracy and for use in all remaining manufacturing demonstrations.

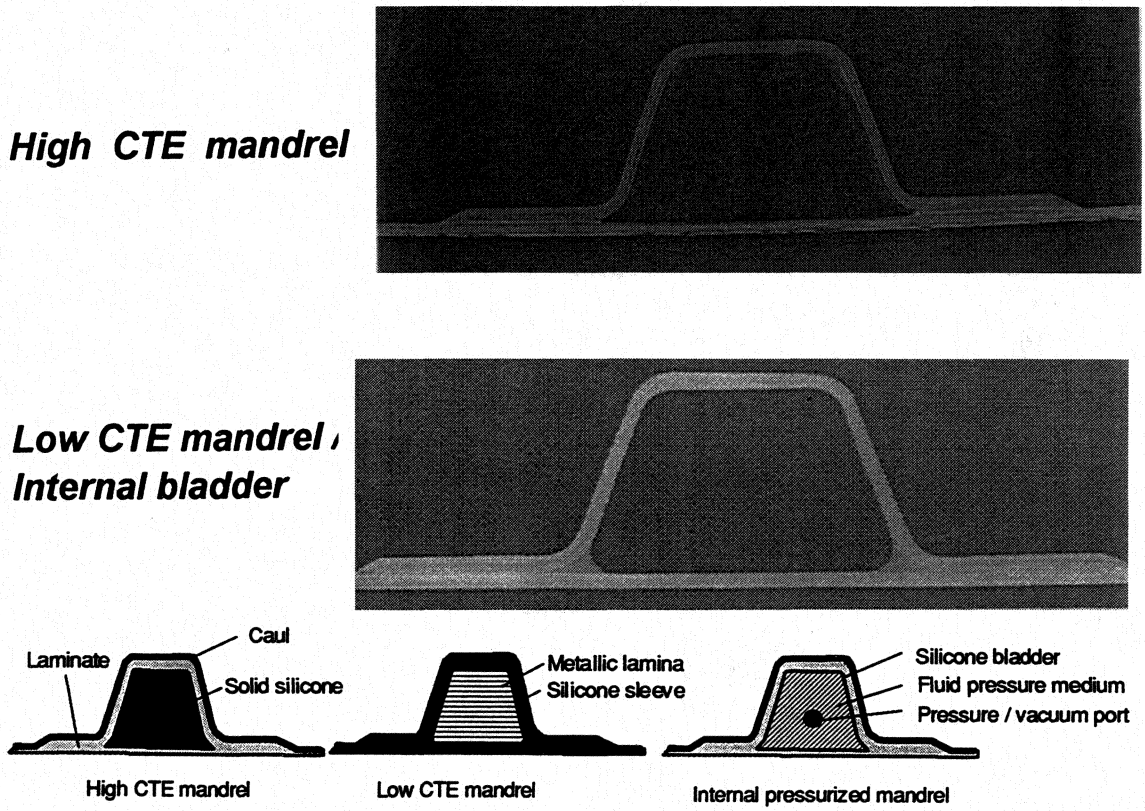

Figure 3-40. Alternative Stringer Cure Mandrels

In an effort to further reduce recurring material and labor costs, a reusable silicone cure bag was manufactured. The bag had a textured surface to allow for breathing between the cauls and bag during cure (Figure 3-41). Since potential silicone contamination on uncured laminates can be detrimental to bond strength, the cauls were designed to cover all uncured laminates. The cost of the bag was reduced by using pleats at frame locations, thereby eliminating the need for a mold to form the bag. Design features of the bag included vacuum and thermocouple ports and a metallic frame to handle and secure the bag to the OML cure tool surface. The texture of the silicon bag provided a breathing path over the whole panel surface when autoclave pressure was less than 45 psi. By texturing the cauls with a similar pattern, it is expected that an acceptable breather path would be achievable under autoclave pressure in excess of 100 psi (Figure 3-42). On a 7' x 10' scale, the IML tooling cauls and reusable cure bag were installed in less than 15 minutes compared to a predicted three to four hours for the standard disposable-bagging approach. Design details for the IML tooling and bagging system were optimized through multiple manufacturing demonstrations which included 3' x 5' and 7' x 10' panels. These are discussed in more detail in [13, 14].

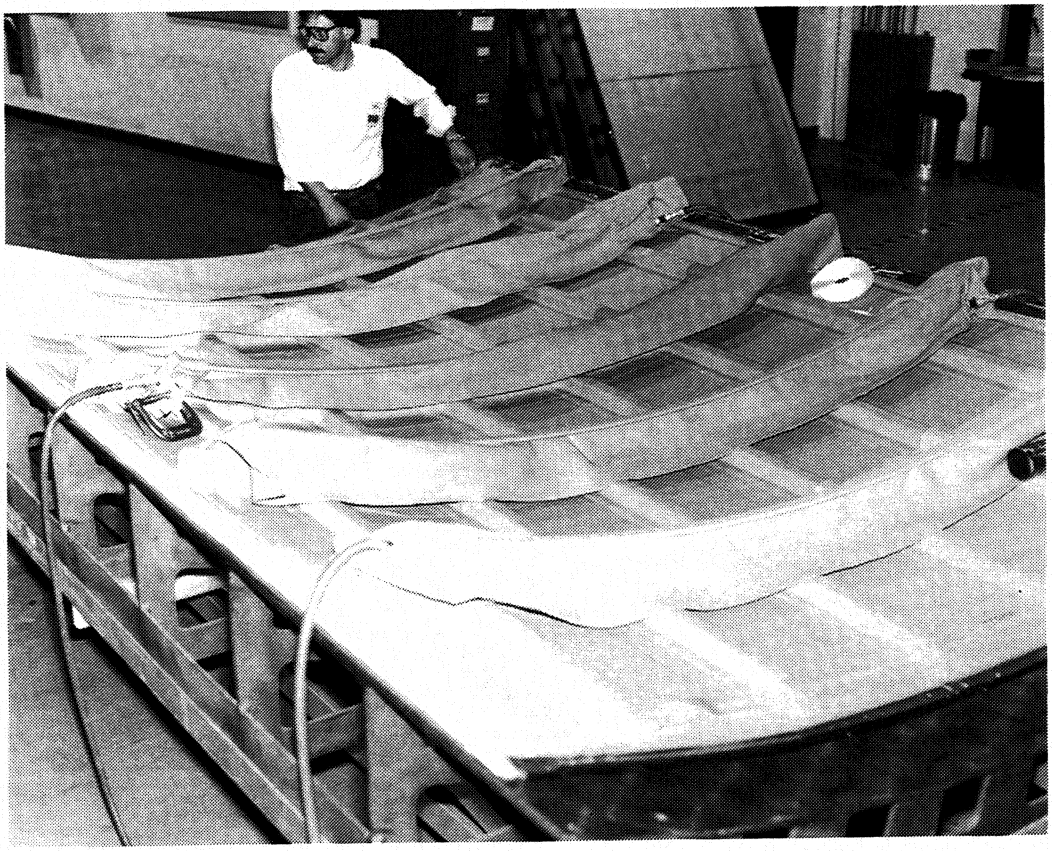

Figure 3-41. Reusable Cure Bag

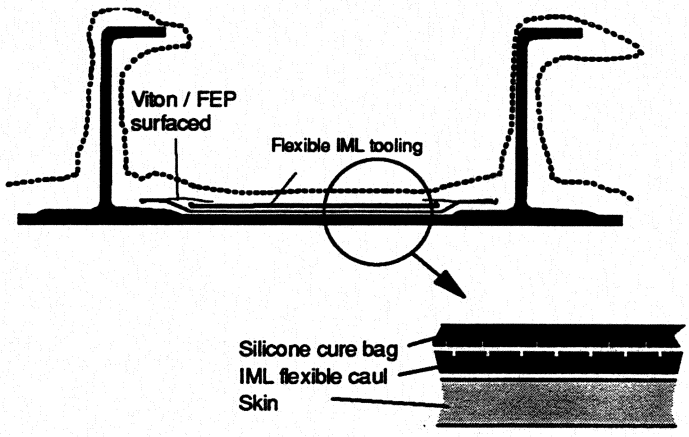

Figure 3-42. Caul and Cure Bag Optimization for High Pressure Cures

3.5.5 Bondline Through-Thickness Reinforcement Development

A potential through-thickness reinforcement method to improve the skin-stringer and skin-frame bondline was evaluated. Foster-Miller developed a method for inserting z-pins through the uncured skin and stringer flanges (Figure 3-43, Appendix B). The method was developed so that the z-pins could be inserted under low pressure and temperature. Individual z-pins were installed into a foam blanket used to stabilize the z-pins during insertion into the laminates. The foam blankets were then located onto the stringer flange. Initial processing parameters used were 150 psi with a 150°F heat source. As the foam collapsed, the metal shim plate on top of the foam blanket pushed the z-pins into the uncured stringer and skin laminates as shown in Figure 3-44. The z-pin lengths were designed to only partially penetrate the skin. Divinycell H45 foam and .008" diameter carbon/epoxy z-pins were selected based on initial processing trials as shown in Table 3-6.

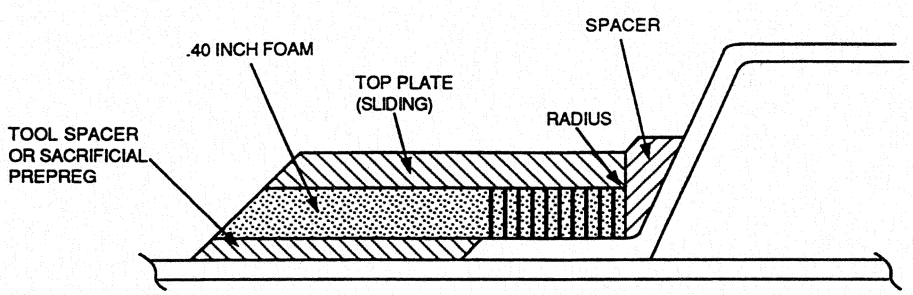

Figure 3-43. Application of "Z" Reinforcement Method

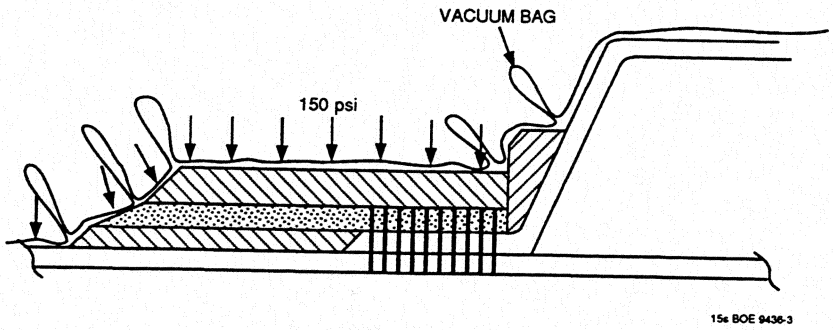

Figure 3-44. Inserted Z-pins

Table 3-6. Process and Material Variations for Z-pin Manufacture

		After Hot Debulk Cycle				After Cure	
Foam	Rod Diam (Mils)	Foam Thickness	Pin Height Protruding	Penetration (%)	Laminate Thickness	Penetration (%)	Laminate Thickness
Rohacell 51IG 0.40 spike	6	0.12	0.1-0.12	12	0.237	-	-
	8	0.12	0.10-0.12	15	0.244	-	-
	10	0.13	0.10-0.12	22	0.242	-	-
Divinycell H45 0.40 spike	6	0.23	0.12-0.14	7	0.240	-	-
	8	0.24	0.12-0.14	24	0.238	61	0.203
	10	0.24	0.12-0.14	48	0.232	61	0.216
Divinycell H45 0.50 spike	8	0.21	0.12	76	0.232	-	-
	10	0.21	0.12	80	0.230	-	-

- 0.20 in. Thick prepreg material
  0.50 in. Divinycell H45
  0.380 in. spike length
  1.25 x 120 in. area (2 pieces)
  0.008 diam carbon/epoxy rod
  0.5 percent areal density reinforcement

This through-thickness reinforcement method was demonstrated for potential application in critical areas such as skin-stringer and skin-frame bondlines. Z-pins were inserted into the skin laminate beneath the skin-frame bondline as shown in Figure 3-45 to arrest damage propagation in the skin plies. Mechanical tests indicated the z-pin reinforcement forced the damage propagation to occur at the skin-to-frame adhesive interface [20]; however, no increase in the failure pull-off loads was observed. Recent developments have shown that spike insertion through the precured frame flanges into the uncured skin can be developed for full-scale applications. Additional efforts by Foster-Miller include the use of metallic z-pins that have a CTE similar to the resin, thus reducing the potential for microcracking. Additional development of this technology will require large-scale fabrication trials and durability testing.

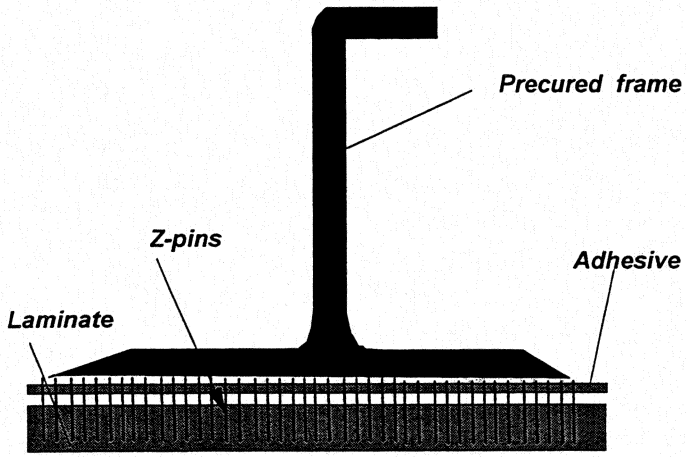

Figure 3-45. Through-thickness Reinforcment Under the Cobonded Frame Flange

3.6 Large Subcomponent Panel Demonstrations

To demonstrate manufacturing feasibility for large quadrant panels, braided, precured, and RTM'd frames, draped-formed stringers; AFP skins; and IML tooling were used to fabricate 7' x 10' panels as described in Section 3.5. Bolted and cobonded-frame-configured demonstration panels were fabricated to address structural performance, producibility, and cost data to support COSTADE model development. Minor IML tooling modifications for the bolted-frame configuration were required to accommodate pad-up regions at frame attachment locations. Each configuration was fabricated several times to develop a level of confidence in the crown panel manufacturing approach and design details.

3.6.1 Manufacturing Methods

The AFP band head was used to fabricate the skins and stringer charges on an OML winding mandrel. The skins were transferred to the OML cure tool for panel assembly. After the stringer charges were individually trimmed, they were formed into a hat shape with a one-step drape-forming process. Adhesive was placed on the stringer base flange areas prior to placement of the stringers onto the skin (Figure 3-46). The IML flexible cauls then aided in locating stringers on the skin (Figure 3-47). Adhesive film was applied to the bottom of the frame flanges prior to positioning the precured frames. The frames were located with the aid of frame fixture clamps, located along the length of the Invar-36 cure tool (Figure 3-48). The frame fixtures maintained frame spacing during cure but allowed frame movement normal to the skin. The precured two ply pressure bridges were then located at the stringer frame intersection (Figure 3-49). The cauls, placed between frame bays (Figures 3-50, 3-51), were designed so that they would overlap each other in the mousehole areas to control resin flow (Figure 3-52). Once the silicone plugs (Figure 3-53) were placed in each mouse hole, the textured silicone bag was placed over the panel

assembly (Figure 3-54). After cure, the stringer cure mandrels are removed for subsequent trimming and inspection of the completed panel (Figure 3-55).

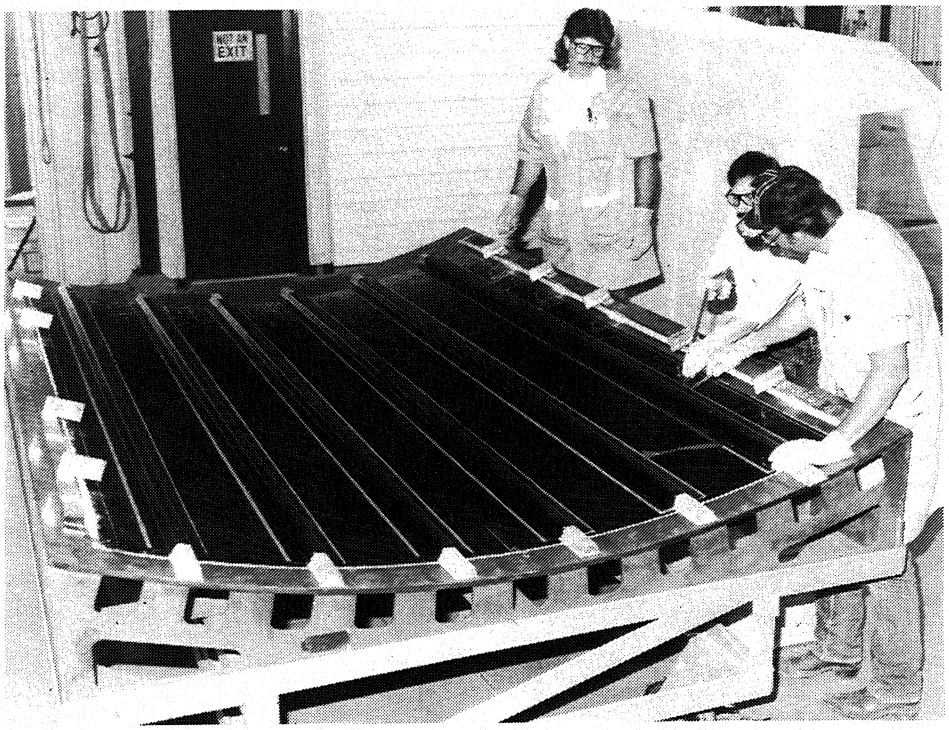

Figure 3-46. Locating Stringers onto OML Skin

Figure 3-47. Locating Stringers with IML Cauls

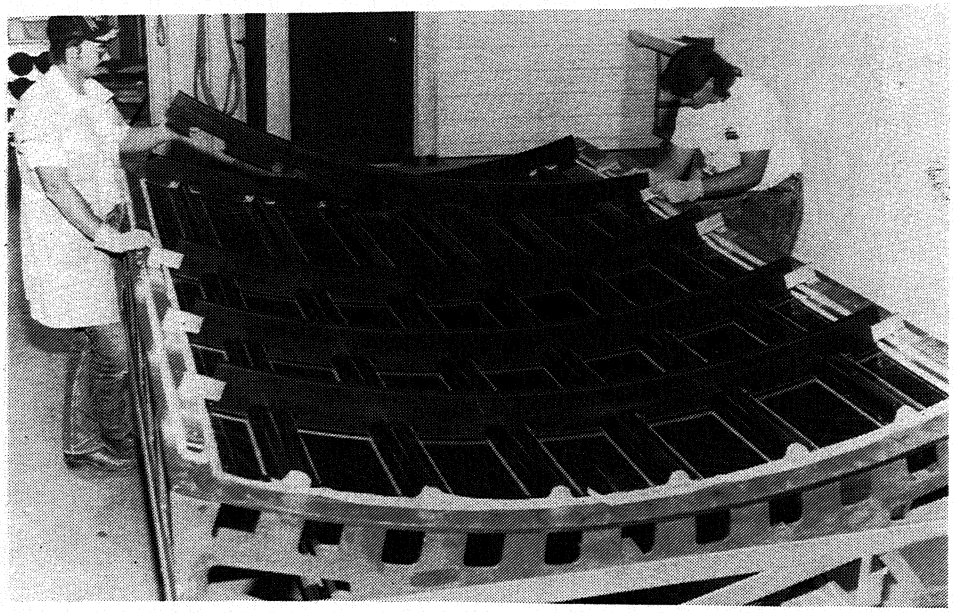

Figure 3-48. Loading Frames into Assembly Fixtures

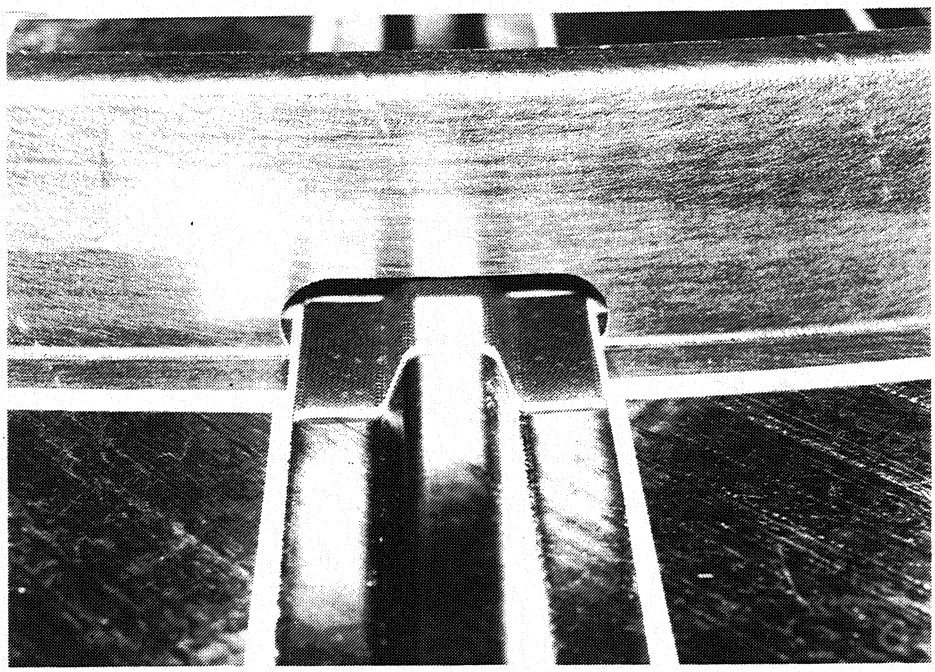

Figure 3-49. Installation of Mouse Hole Tooling Aids

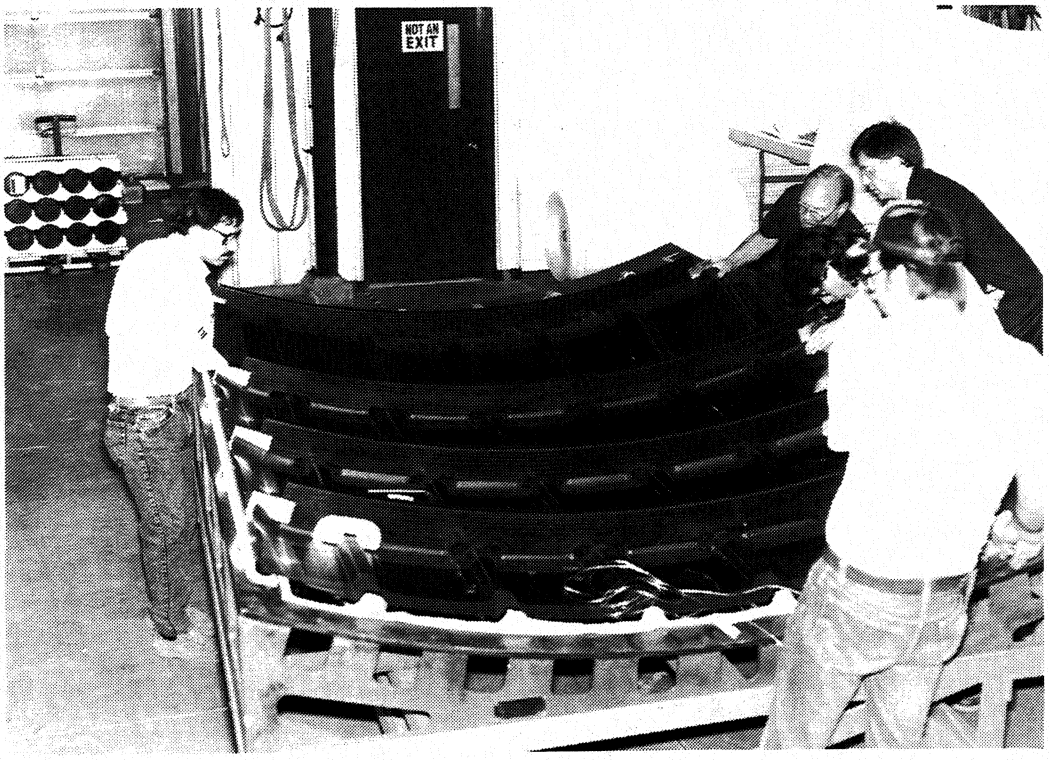

Figure 3-50. Installation of Cauls

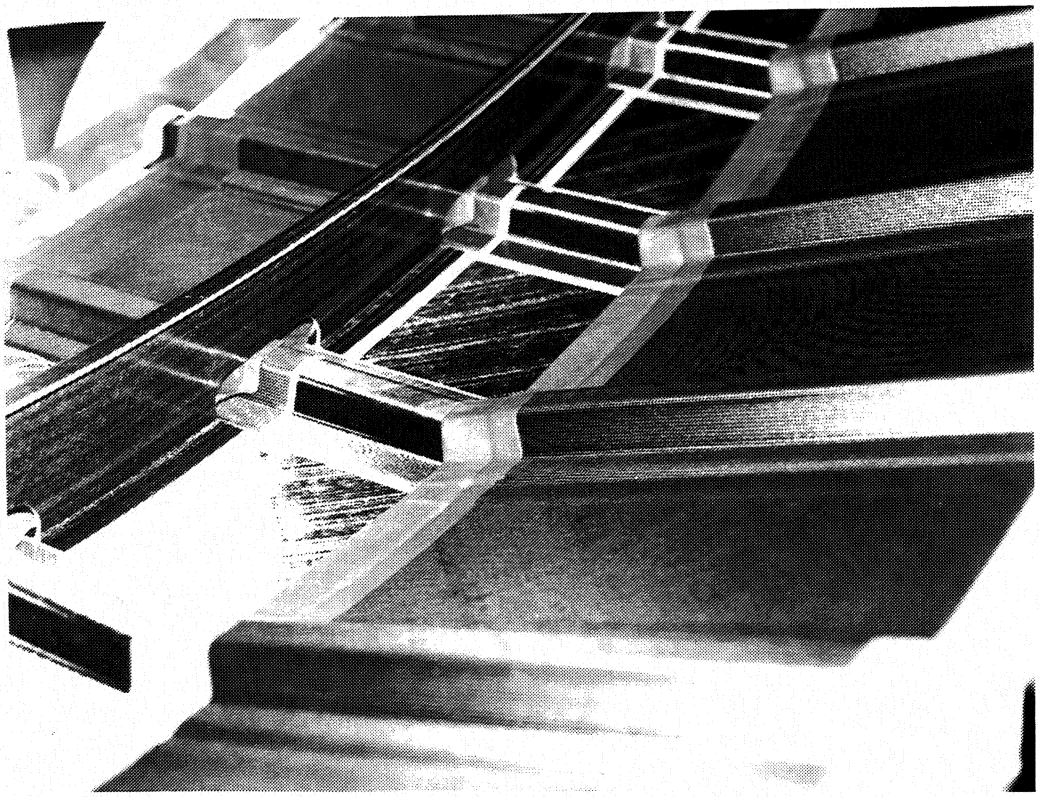

Figure 3-51. Installation of Cauls between Frame Bays

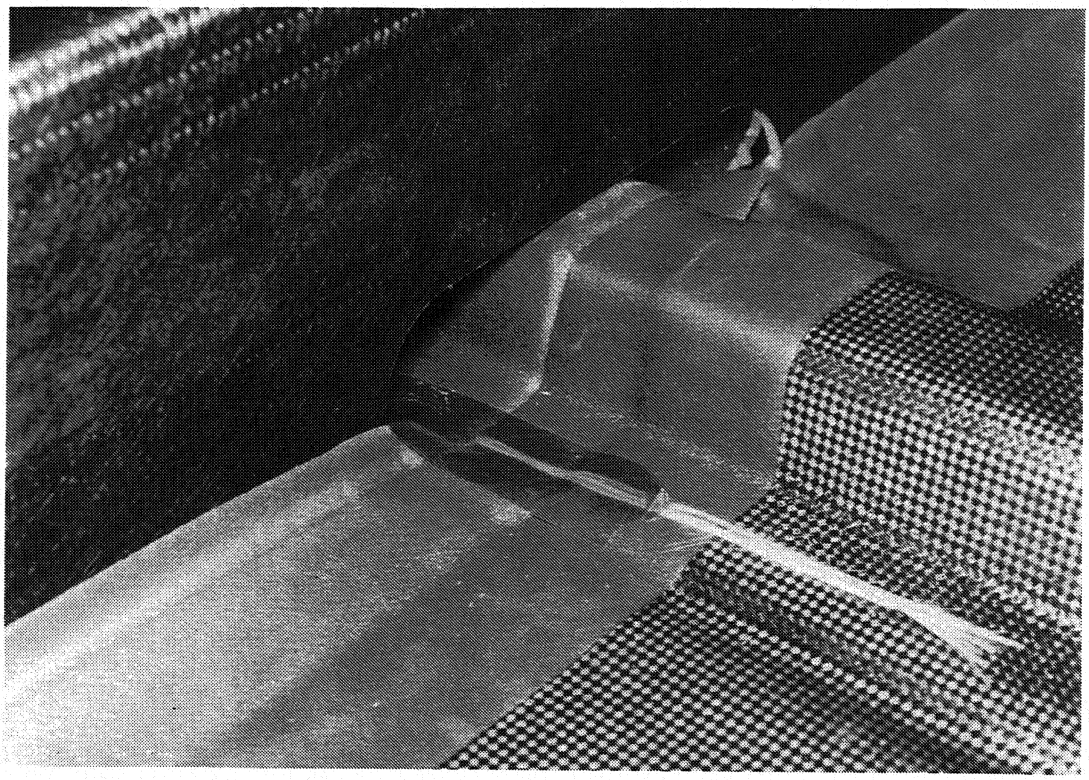

Figure 3-52. Installation of Cauls: Fit-up at Frame Stringer Intersection

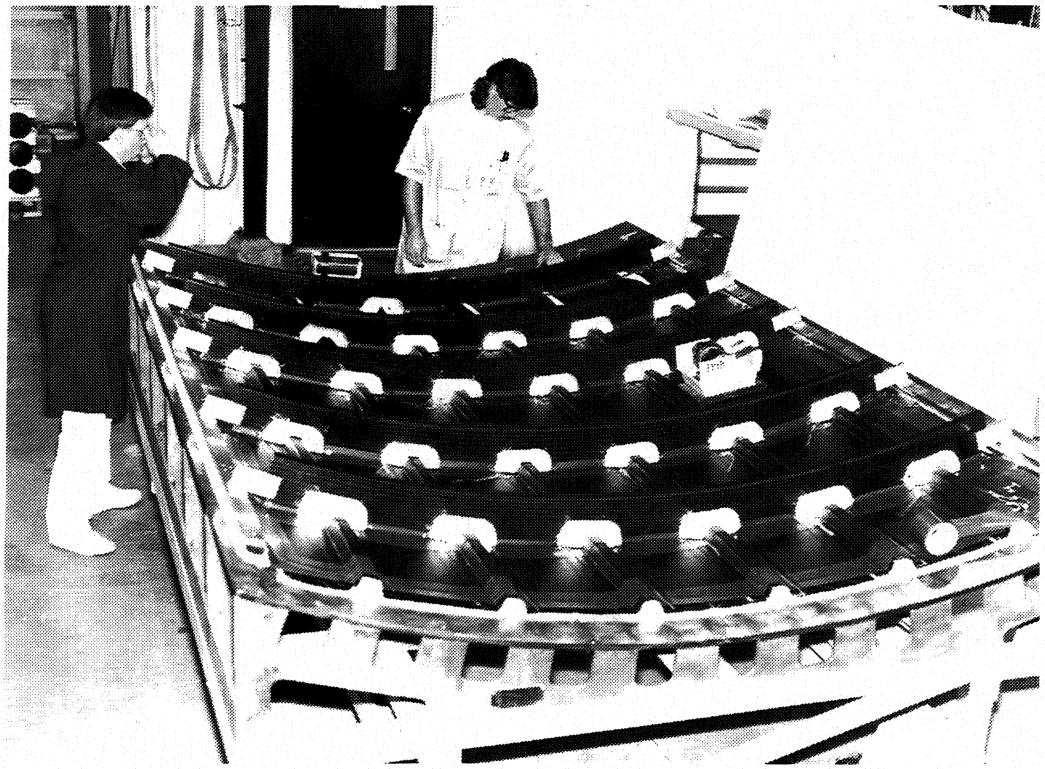

Figure 3-53. Installation of Pressure Intensifiers

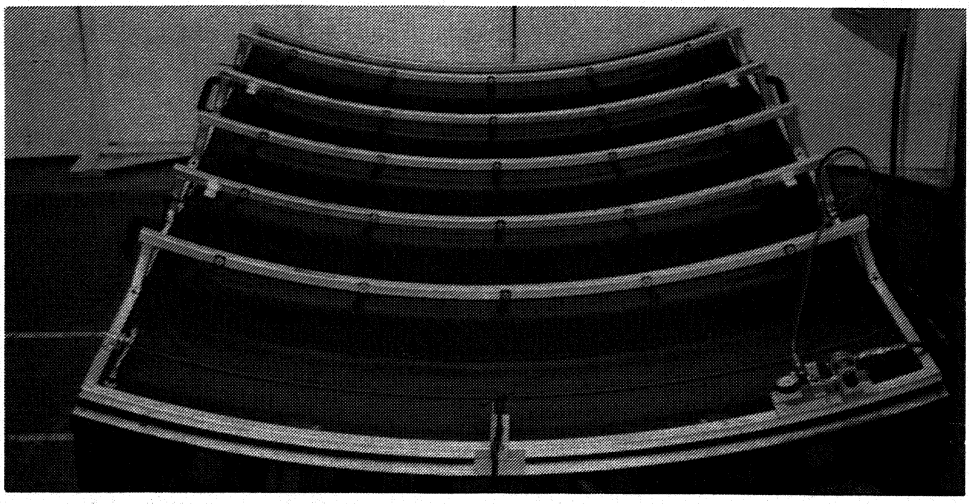

Figure 3-54. Reusable Cure Bag

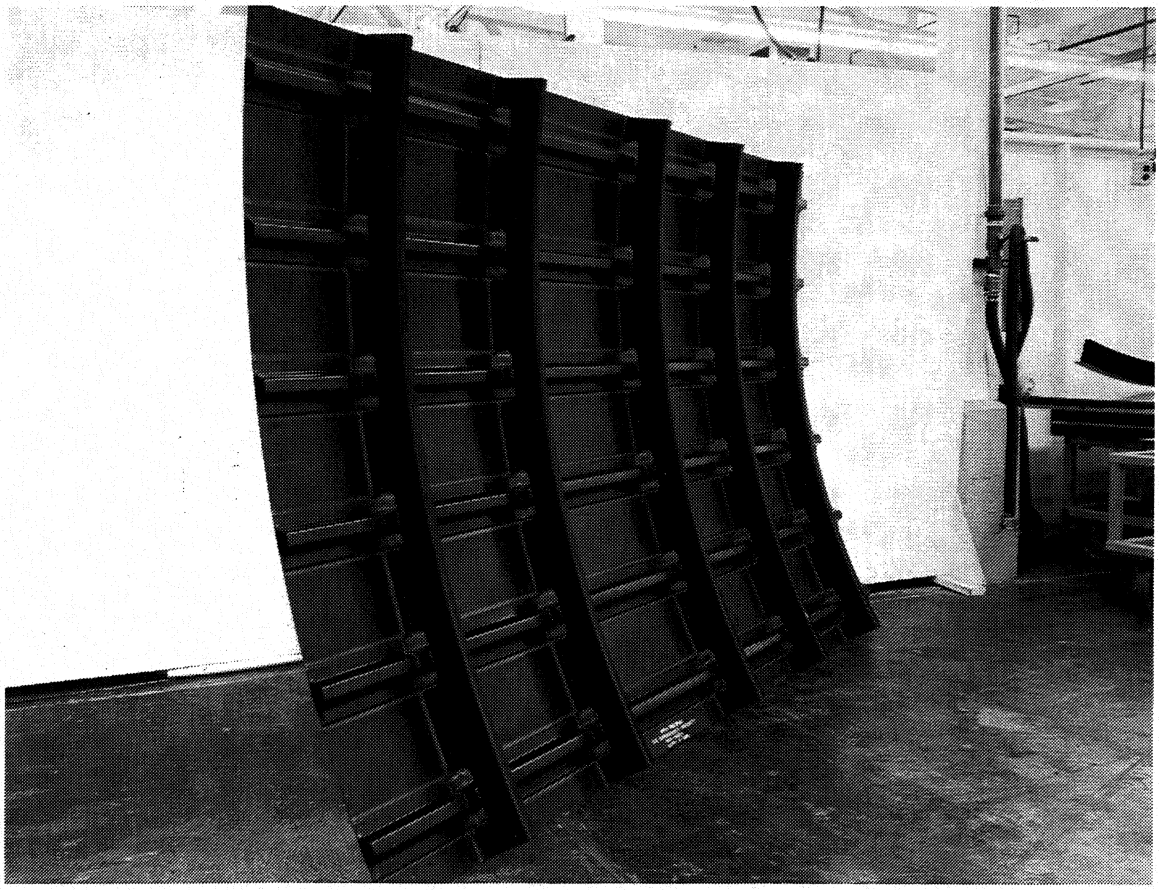

Figure 3-55. 7' by 10' Crown Panel

The preceding manufacturing process was used for all crown panel manufacturing demonstrations funded by the ATCAS (NAS1-18889) program and for benchmark crown panels funded by Task 2 of the TCAPS (NAS1-19349) program.

3.6.2 Evaluation of Panel Quality

The manufacturing demonstration panels were inspected for contour, frame and stringer location, and laminate and bondline quality. The AFP process produced a laminate construction with a distinct pattern shown in Figure 3-56. The cross hatch pattern represents edges of the bands. Laminate void content was less than 2% with resin-rich areas at gap locations between bands [3]. Inspection of the stringer cross-sections indicated good control of the resin flow at the stringer-frame intersection, and good control of the stringer shape (Figure 3-57). Out-of plane fiber distortion occurred at the edges of cobonded elements due to pressure gradients and high-flow resin systems (Figure 3-58). One cause of the pressure gradients was mislocation of IML tooling in excess of ±0.030" from nominal. Another cause was non-uniform loads applied to the frame during cure. Development efforts in the keel and side panels showed that low flow resin systems, fabric outer plies, and increased frame flange edge taper (> 10°) significantly reduced frame sinkage (see Section 5.7) and corresponding out-of-plane fiber distortion (Figure 3-59).

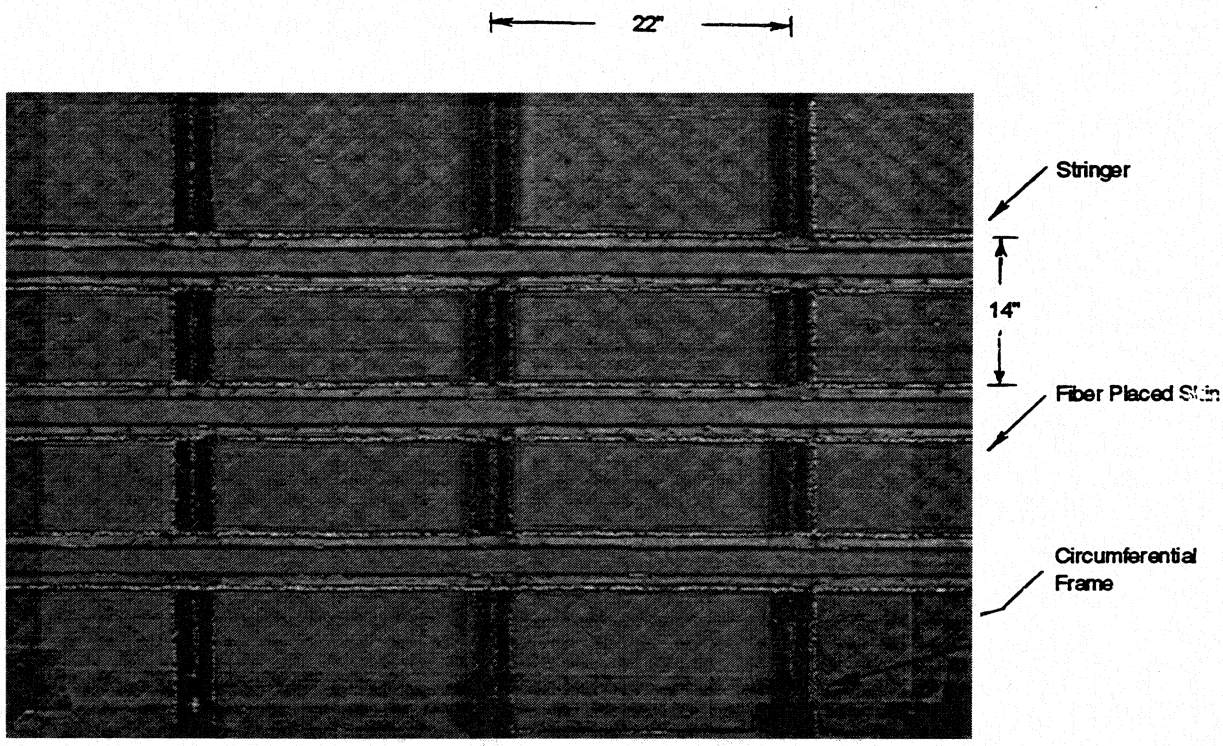

Figure 3-56. Pulse-Echo Amplitude Map for a Crown Panel Subcomponent manufactured (AFP Skin with Cobonded Stringers and Bonded Frames)

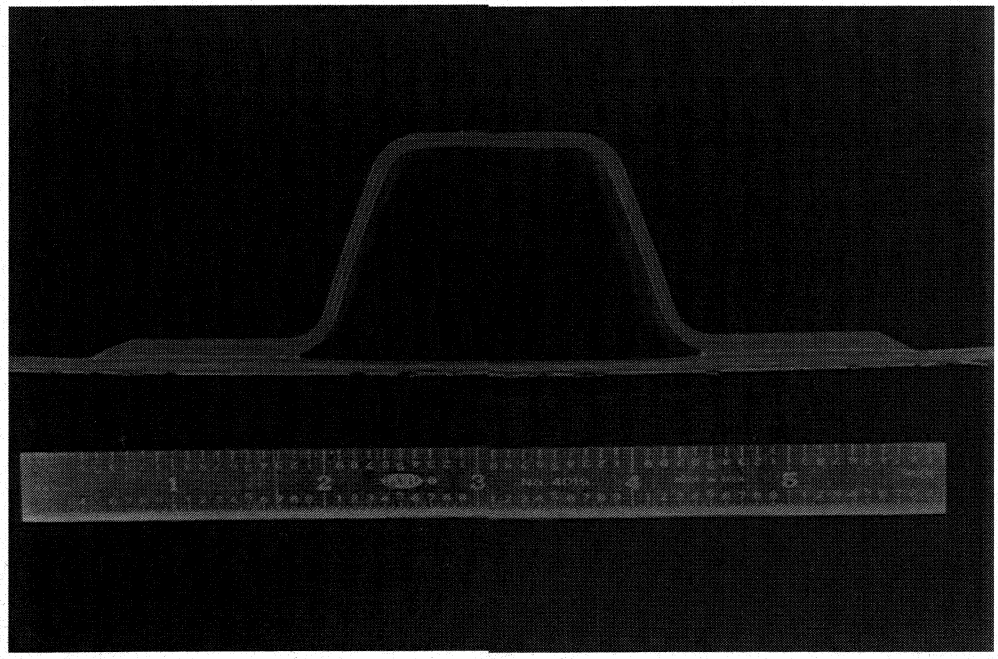

Figure 3-57. Cross Section of Cocured Stringers

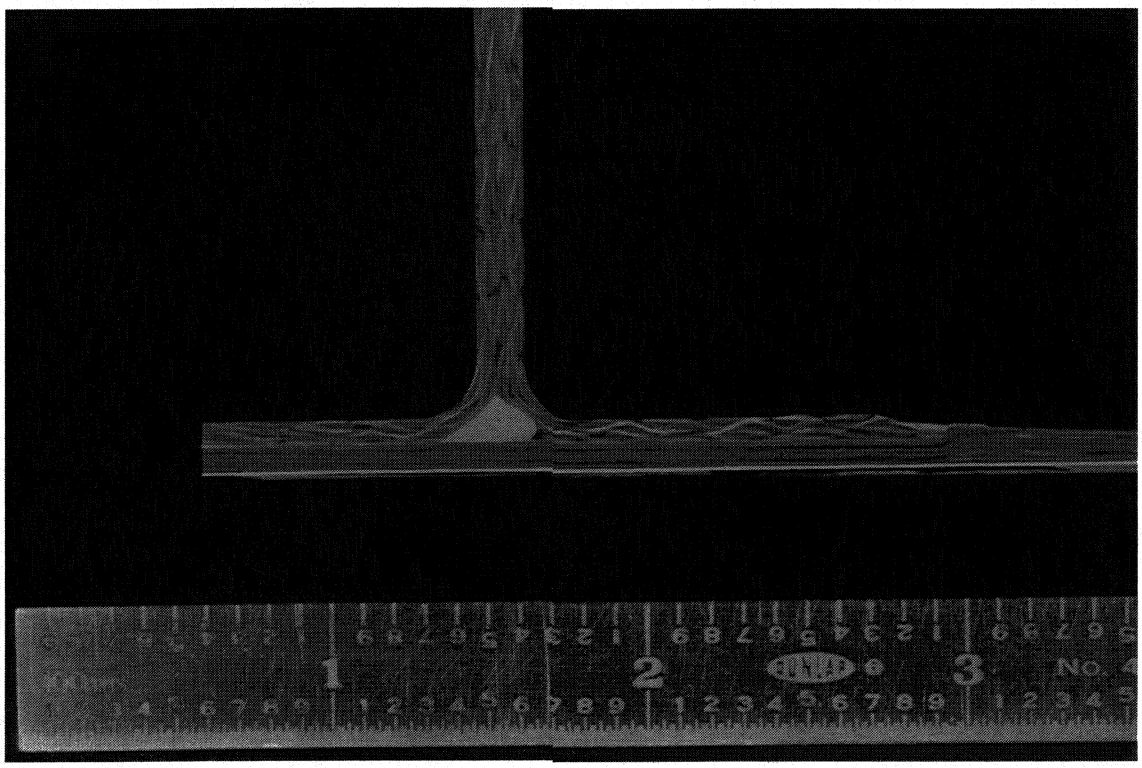

Figure 3-58. Bondline of Cobonded Frame

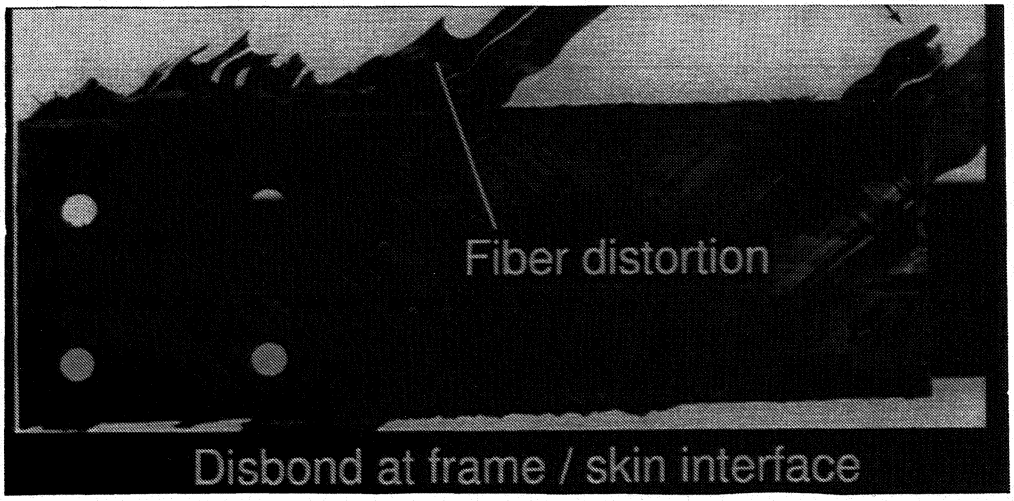

Figure 3-59. Fiber Distortion from Frame Sinkage

Inspection methods were not capable of inspecting the bond quality near the stringer flange radii or underneath the frame web as shown in Figure 3-60. Frame pull-off tests revealed bond failure between the frame's precured adhesive noodle and the frame-to-skin adhesive layer. This disbond was not detectable using normal TTU or pulse echo methods due to the presence of the frame web. Innovative NDI methods and equipment would be required to inspect the hat stringer interior and frame-web/skin bondline.

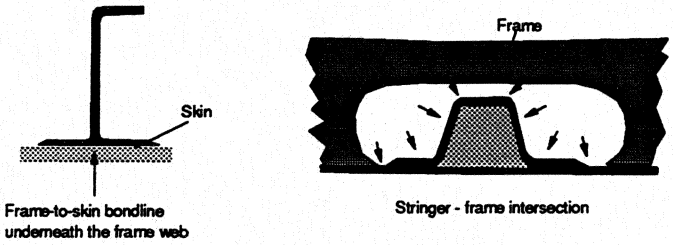

Figure 3-60. Limitations of Inspection Techniques

Panel contour was measured for the bonded- and bolted-frame configurations as shown in Figure 3-61. The bolted-frame panel had significantly more contour variation than the cobonded-frame configuration. The 7' x 10' panel size was sufficient to evaluate the amount of panel warpage due to edge effects, fiber distortion, resin distribution, and CTE mismatch between cobonded and

cocured elements. Evaluation of the contour data indicated that the edge effects induce warpage around the panel perimeter, extending up to two feet into the panel interior. Finite element (FE) models [21,22] show that only 5-10 lbs of force at each stringer end was needed to push the panel assembly into correct contour, eliminating the need for shimming.

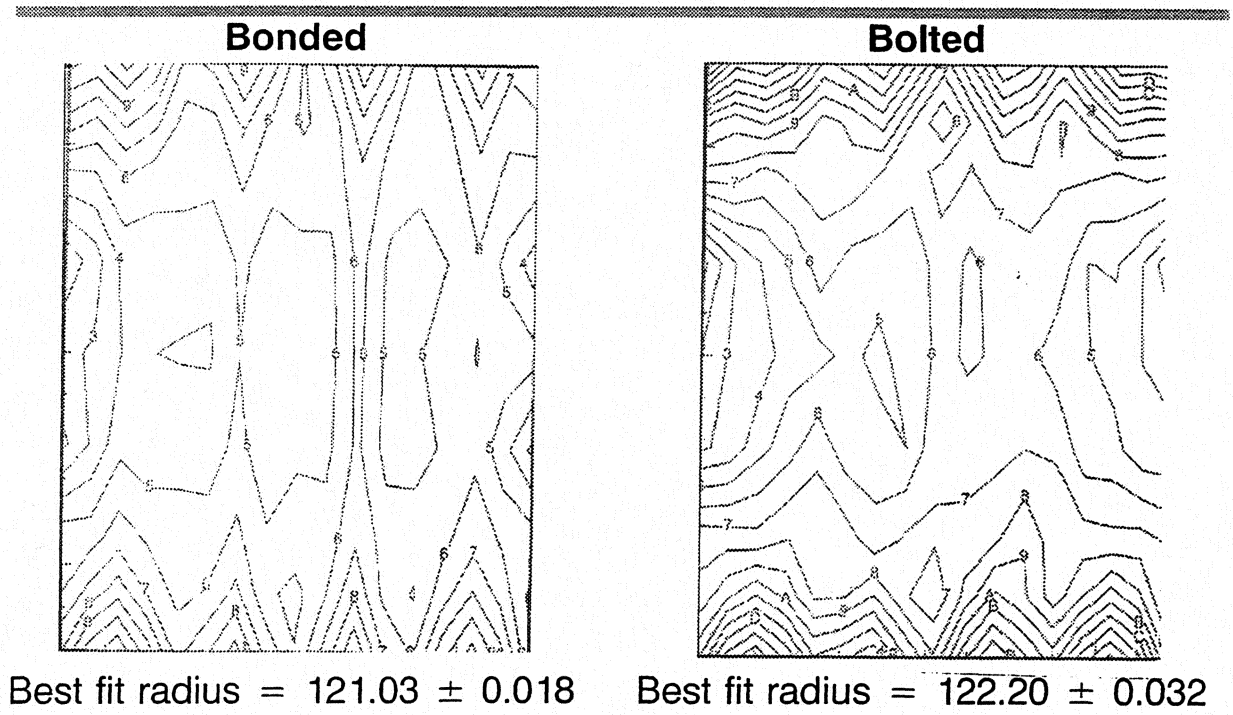

Figure 3-61. Surface Contour of Bolted and Co-bonded Frame Configurations

Warpage data indicated that kinks in the panel occurred at stringer and frame locations as shown in Figure 3-62. These kinks were a result of residual stresses in the stringer corners due to angle spring-in, resin pooling at the ends of the stringers, and high CTE mismatch between the stringer radius filler, stringer, and skin laminate [22]. Stringer flange taper and flexible IML tooling modifications eliminated the resin pooling on the outer stringer flanges. These modifications helped reduce transverse panel warpage to 0.035" between stringers, and longitudinal warpage to 0.015" between frames.

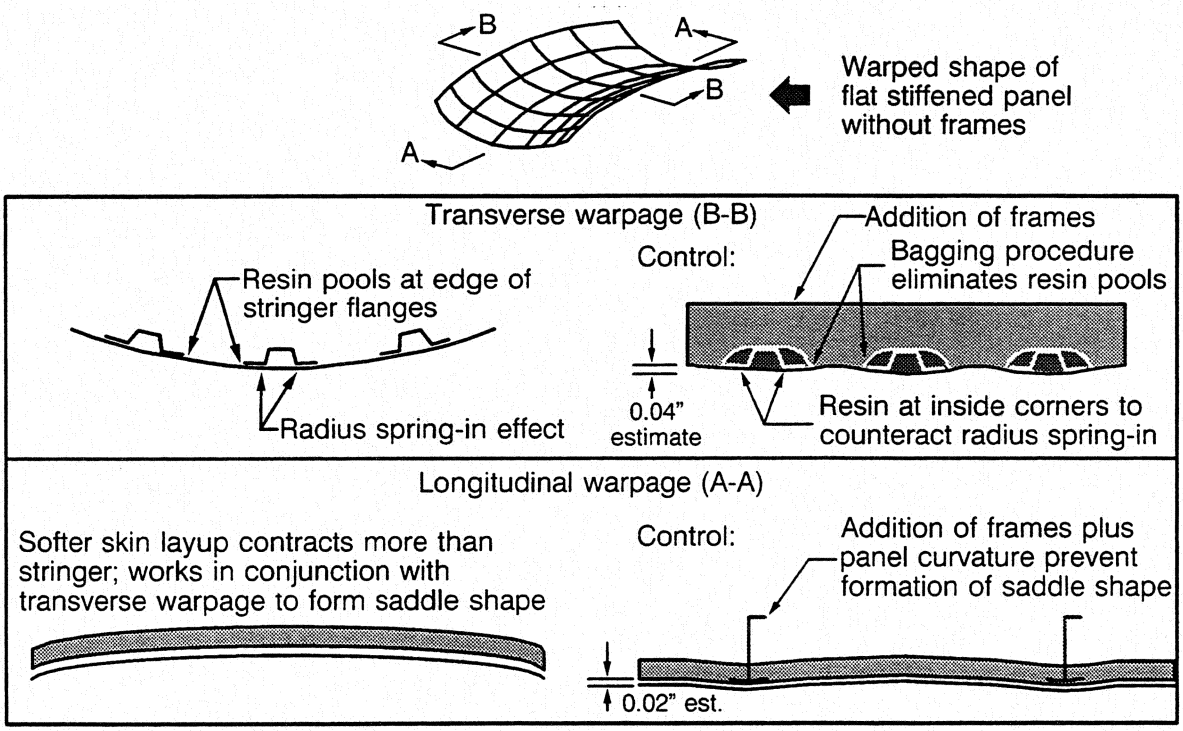

Figure 3-62. Panel Warpage of Crown Panels

Dimensional control of the frame and stringer spacing was evaluated as shown in Figure 3-63. The flexible IML tooling controlled stringer spacing to within ±.025" (standard deviation) of each location. Measurement of frame spacing indicated that the frames moved towards the panel center during cure at 0.003 in/in. Therefore, proper compensation would require the frame spacing to be assembled at 22.10" instead of 22.00". Frame location varied by ±0.050" (standard deviation), which is significant enough to require shimming in a barrel assembly. Additional constraints and methods to control frame spacing to ±0.008" were considered high risk since significant loads could be generated in the frame-skin bondline. Alternative compensation methods could include sacrificial machining.

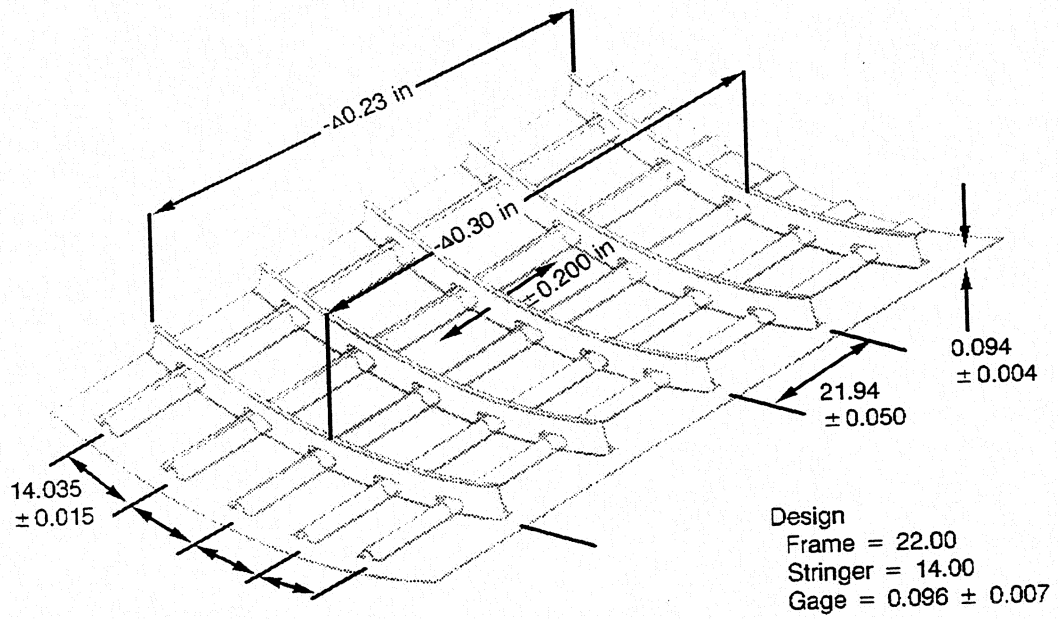

Figure 3-63. Dimensional Tolerance of Crown Panels with Bonded Frames

4.0 KEEL MANUFACTURING DEVELOPMENTS

4.1 Global Evaluation Trade Studies

As discussed in Section 2.0, DBTs were also formed to conduct trade studies of candidate quadrant designs and manufacturing approaches for the keel. Two keel panel designs were developed for each of two design families (C and D). The Family C concepts (Figure 4-1) were skin/stringer/frame configurations with both stringers and frames cobonded or cocured to the laminate skin. Family D concepts were sandwich structure with cobonded frames (Figure 4-2). For each design a fabrication and assembly plan was developed to provide sufficient detail for accurate cost estimates.

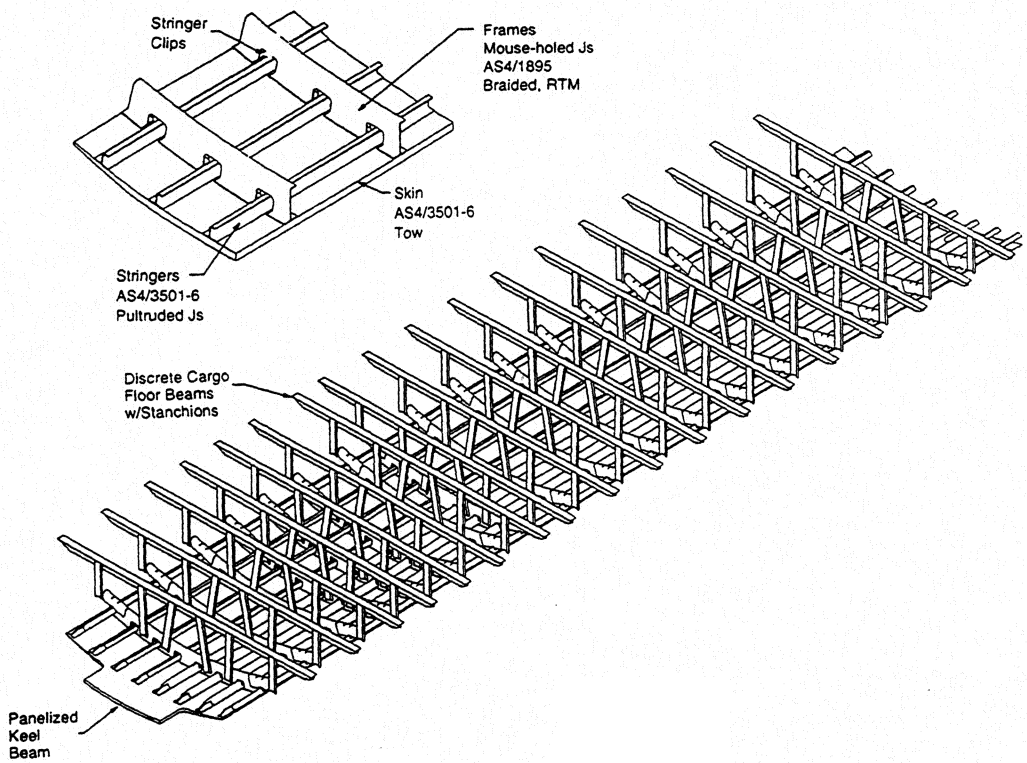

Figure 4-1. Keel Quadrant Panel-Typical Stiffened Skin Concept (Family C)

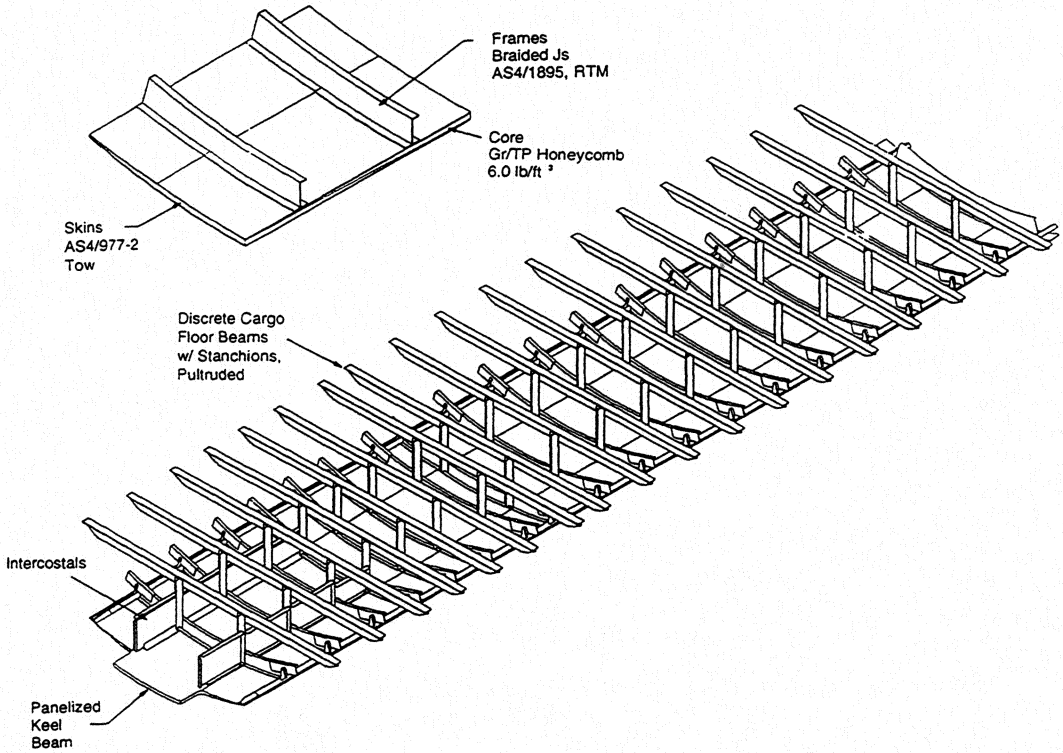

Figure 4-2. Keel Quadrant Panel-Typical Sandwich Concept (Family D)

Each keel concept was evaluated for cost, weight, and risk. The cost estimates were generated using the same methods and assumptions employed for the crown quadrant (Section 3.1). Again, to better understand the potential of each family, "new" designs, beyond those originally studied in detail, were created by modifying and/or combining attractive elements of the original four concepts. The costs and weights of these new designs were estimated based on detailed values obtained for the original designs. The results of the keel global evaluation are described in detail in [25]. Ultimately sandwich construction, thought to be more easily adapted to either an OML or an IML approach, and therefore lower risk, was selected over skin/stringer for the keel. Downselected materials and processes are summarized below:

- *Sandwich panel configuration.* Cost and weight differences for the two design families (sandwich and skin/stringer) were small. A sandwich concept, which could be more easily adapted to either an OML or IML approach, was thought to be lower risk.
- *Skins. Standard modulus fiber, moderately toughened resin (AS4/997-2).* The performance benefits offered by higher modulus fibers did not justify their greater expense.
- *Core: Rohacell foam.* The alternative carbon fiber reinforced honeycomb core was half the weight, but cost prohibitive. Subsequent core screening studies resulted in a change of the core material choice, as discussed in Section 4.2.
- *Panelized keel beam chords.* Lower raw material costs for discrete aluminum keel chords were outweighed by higher machining and assembly costs, and heavier associated panel design.

- *Braided RTM constant J-section circumferential frames.* These had roughly half the labor cost of multi-piece frames with shear ties and stringer clips.
- *Cargo floor structure with discrete floor beams and stanchions.* This concept was found to be less costly and lighter weight than a full-depth configuration with integral frames. The constant-section elements could be pultruded, taking advantage of the efficiency of large batch sizes and little touch labor.
- *Intercostals: Pressclaved fabric.* This method offered cost reductions compared to RTM'd stitched uni-tape and press-formed thermoplastic. The intercostals are precured and mechanically fastened to the attachment chords and cargo floor stanchions. The attachment chords are pultruded blades which are cobonded to the panel skin during cure.
- *OML cure tool.* A comparison of OML and IML cure tool approaches revealed a more-or-less even trade-off between tool costs (an OML tool is simpler and less expensive) and labor costs (an IML tool requires less labor to locate and bag stiffening elements). However, an OML tool provides greater flexibility to adapt to design changes, reduces concerns over panel shrinkage, and offers commonality with tools for other quadrant panels.
- *Tow placement on cure tool vs. separate winding mandrel.* Initial studies suggested the improved layup rate associated with using a separate winding mandrel did not justify the increased costs associated with tooling and handling costs. However, later studies revealed that the cost for having two cure tools (needed to make rates for AFP on the cure tool) substantially outweighed the costs of just having one cure tool and one winding mandrel.

4.2 Design Updates

The downselected keel design resulting from the global evaluation phase evolved to reflect material developments, updated loads, configuration changes, and updated criteria. Loads for the keel quadrant were updated to reflect the baseline composite fuselage using the pathfinder shell reference model [17]. The new loads led to resizing and configuration changes which in turn affected the manufacturing processes. Design criteria (e.g., allowables) were updated based on the testing of coupons which reflected the new configuration and material choices.

The facesheet prepreg downselected during keel global evaluation was AS4/977-2. The resin system was later changed to Hercules' 8552. Hercules' 8552 is a non-interlayered toughened epoxy which is competitively priced, processes well in the advanced tow placement environment, and processes well over honeycomb core [3]. The core material initially selected was also changed. Core screening studies identified Hexcel's fiberglass heat resistant phenolic core (HRP) as having the best combination of stiffness, impact damage resistance, cost, and weight. Two different densities of core were used: 8 pcf in the aft end; and 12 pcf in the more highly loaded forward end. All keel panel manufacturing trials and demonstrations were conducted with HRP core. Du Pont's Korex was later identified as a potential alternative which could provide reduced weight, improved impact damage resistance, and improved environmental durability at an acceptable cost penalty. Korex was used in much of the side panel development work described in Section 5.

The global keel design featured a constant core depth at the longitudinal centerline of the panel. This core depth tapered (at approximately 3°) toward the longitudinal edges where the loads were reduced. The facesheets ramped together at the longitudinal edges into a laminate, sealing the core against moisture ingression. This laminate also provided for splicing to the adjacent side panels. A 20° taper was provided at the end of the keel panel for the aft circumferential splice. The frames in this configuration were split and spliced together at the panel centerline. Spliced frames were originally selected due to the difficulty of matching three IML contours with one continuous frame. Later keel design iterations eliminated the ramps by incorporating full-depth longitudinal edges. The full-depth edges were partly a response to increased loads, but also allowed a more efficient joint to the side panel (which was also baselined as sandwich), and allowed the use of constant cross-section frames (Figure 4-3).

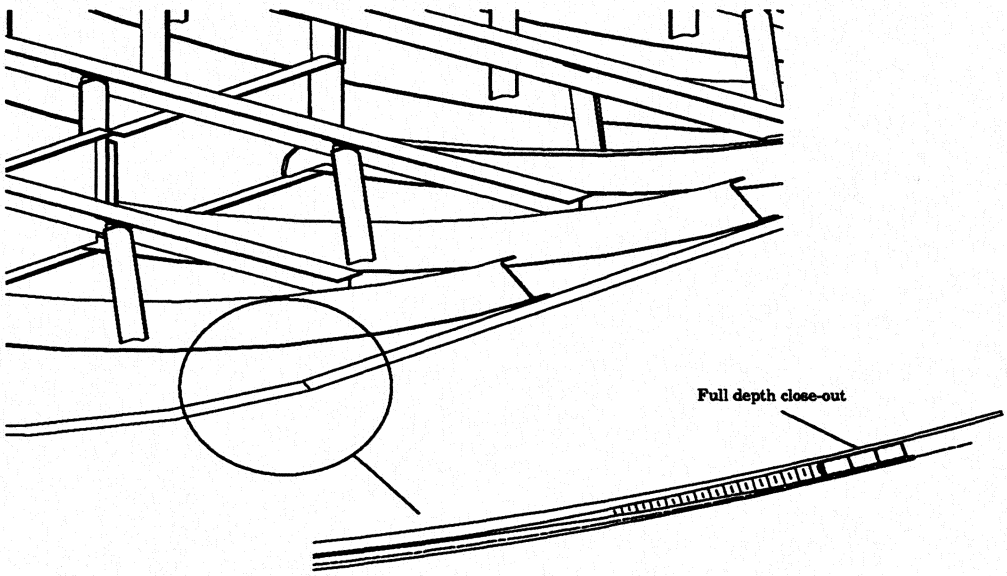

Figure 4-3. Revised Keel Panel Configuration

An investigation of space constraints in the main landing gear wheel well area also allowed a widening of the forward splice tab-out. In the previous tapered design, the width of the titanium splice plates was confined to the area of constant panel depth. Extending the splice plates into the tapered regions would have made for complex machining and difficult fit-up. In the full-depth panel design, the width of the splice plates was limited only by space constraints within the wheel well. The wider splice plates and tab-out provided for an easier joint and a better means of redistributing the concentrated loads near the wheel well cutouts. The constant panel thickness configuration also simplified the interface with the wheel well bulkhead.

4.3 Baseline Manufacturing Approach

A proposed factory lay-out, shown in Figure 4-4, depicts the major process flow for keel panel fabrication and fuselage assembly. This factory does not reflect the amount of rate tooling and equipment required to fabricate all quadrants. The manufacturing approach for the baseline keel design, summarized in Section 4.1, is as follows.

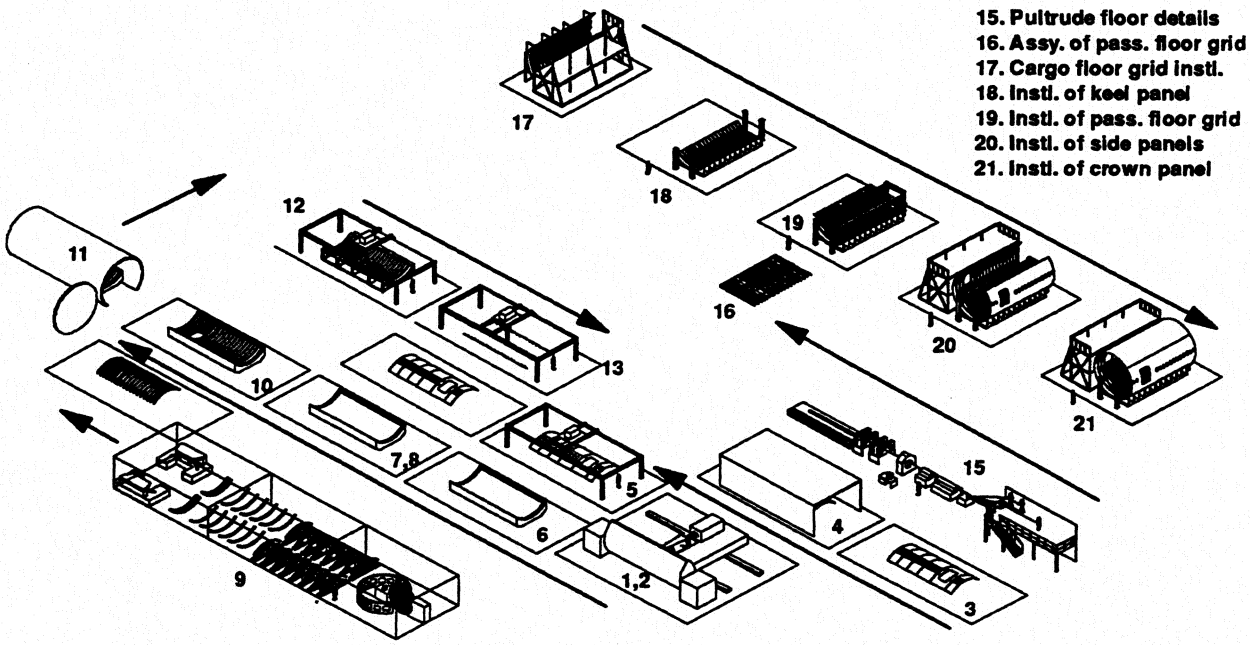

Figure 4-4. Manufacturing Sequence for Sandwich Panel Construction

4.3.1 Panel Skins

Keel panel facesheets are laminated with the AFP process on a convex mandrel in a manner similar to the crown panel skins. The keel, however, includes severe thickness variations, ranging from a solid laminate (1.1") to thin facesheets (0.09") with core. The BCA head was used for the initial keel development work. The TCA head has the capability to add and drop individual tows, as opposed to adding and dropping full band widths. A discussion of AFP process efficiencies is detailed in Section 6.1. The baseline material for the AFP skins is Hercules AS4/8552, with a resin content of 35% by weight. As in the crown, carbon or fiberglass fabric surface plies would likely be added to final designs to reduce fiber breakout when drilling holes and to prevent galvanic corrosion at interfaces with metallic structure.

4.3.2 Circumferential Frames

The keel panel circumferential frames are 2-D triaxial braided, RTM'd J-sections similar to those used in the crown quadrant. AS4/PR500 is the baseline frame material. The one-piece fuselage frames are designed to match the constant radius inner skin contour to ± 0.010" to minimize frame-to-skin interface gaps. A small cutout machined in the web of each frame at the panel centerline provides for drainage. The frames were precured and cobonded to the sandwich panel with CYTEC's Metalbond 1515-3M film adhesive. Fiber orientation variations of less than ±5° are required to meet laminate thickness requirements and mold closure. Keel preform architecture design is discussed in more detail in [32].

4.3.3 Intercostals and Attachment Chords

Intercostals are fabricated by press claving AS4/3501-6 prepreg fabric over a cure tool. The press and cure tool could be designed for batch mode operations to reduce tooling and recurring labor costs. The intercostals are assembled to the panel by fastening to precured, pultruded attachment cords which would be cobonded to the skin. Alternative low cost fabrication methods are RTM and drape forming processes, similar to the same process used for the crown hat stringer and frame panels (Section 3.3).

4.3.4 Cargo Floor Beams and Stanchions

Cargo floor structural elements were designed to be of constant cross-section, and therefore conducive to using pultrusion, a very cost-effective fabrication process. Cargo floor beams are J-sections; while stanchions are T-sections. Currently, pultrusion material systems for structural elements are being developed. These appear to be similar to AS4/3501-6, and could be considered for the cargo floor beams. The cargo floor beams are designed to utilize fabric while the stanchions use stitched unidirectional tape. Cargo floor elements are precured and mechanically fastened.

4.3.5 Core Blanket

The sandwich panel core blanket in the baseline approach is comprised of individual honeycomb core pieces which are first cut to rough thickness on a horizontal bandsaw. The core pieces are then heat formed to curvature at 450°F, a temperature sufficient for plastic deformation of the core [3,23,24]. HRP honeycomb (fiberglass reinforced phenolic) was selected as the baseline core material based on the results of screening tests; however, Korex is considered a potential alternative. Foaming adhesive is used to splice the core pieces and close-outs together (see Section 4.3.6) in a 350°F oven/vacuum bag operation. Caul plates are used over the core splices during this operation to control expansion and prevent the vacuum bag from pulling down into the splice joint.

Core stabilization for machining and detail location is required for accurate panel tolerance control. In the baseline approach, two layers of peel ply are applied to the OML surface of the core blanket to provide stabilization for final machining. One layer of dry polyester peel ply and one layer of preimpregnated peel ply are used, as shown in Figure 4-5. The dry peel ply is placed between the core and preimpregnated peel ply to reduce the amount of resin bond between the

core and peel plies. This significantly reduces the amount of effort required to remove the peel ply for subsequent panel assembly. This also lowers the risk of damaging the core. A 122" contoured mill fixture, with vacuum capability for securing the core blanket to the contoured tool, is used for final core machining.

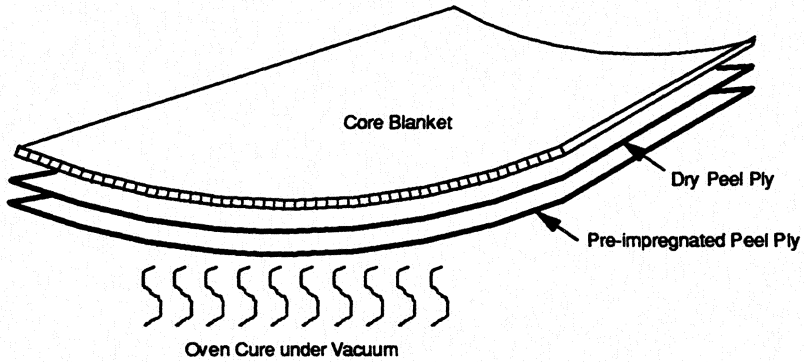

Figure 4-5. Application of Core Stabilization Material

Laminate tailoring of the IML and OML facesheets is accommodated for by machining contour into only one side of the core blanket, due to the gentle contour. Design changes can be easily accommondated by modifying the machined profile of the core to compensate for altered ply tailoring (Figure 4-6). This eliminates the need for modifying the IML or frame tooling.

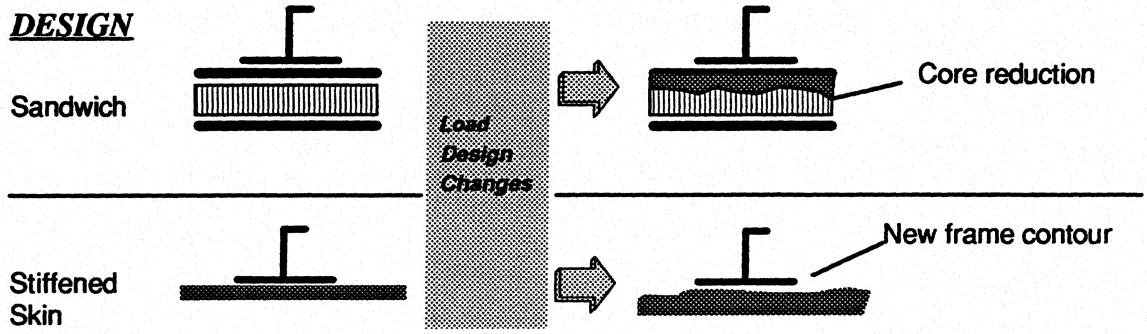

Figure 4-6. Required Design Modifications for Increased Load Requirements

4.3.6 Close-outs

The keel sandwich panel incorporates edge close-outs at the longitudinal and aft circumferential splices to protect the core from the environment and to react fastener clamp-up loads. The relative merits of the various concepts under consideration were discussed in [3],[25] and [26]. Two concepts have been identified as baselines for the longitudinal splices. One is a full-depth design, the other is ramped (Figure 4-7). Each is constructed of graphite/epoxy which is either braided onto a fly-away mandrel, or fabric overwrapped on a fly away mandrel. The mandrel could be made of dense foam, foam-filled honeycomb, or foam in combination with strips of solid laminate under the fastener rows.

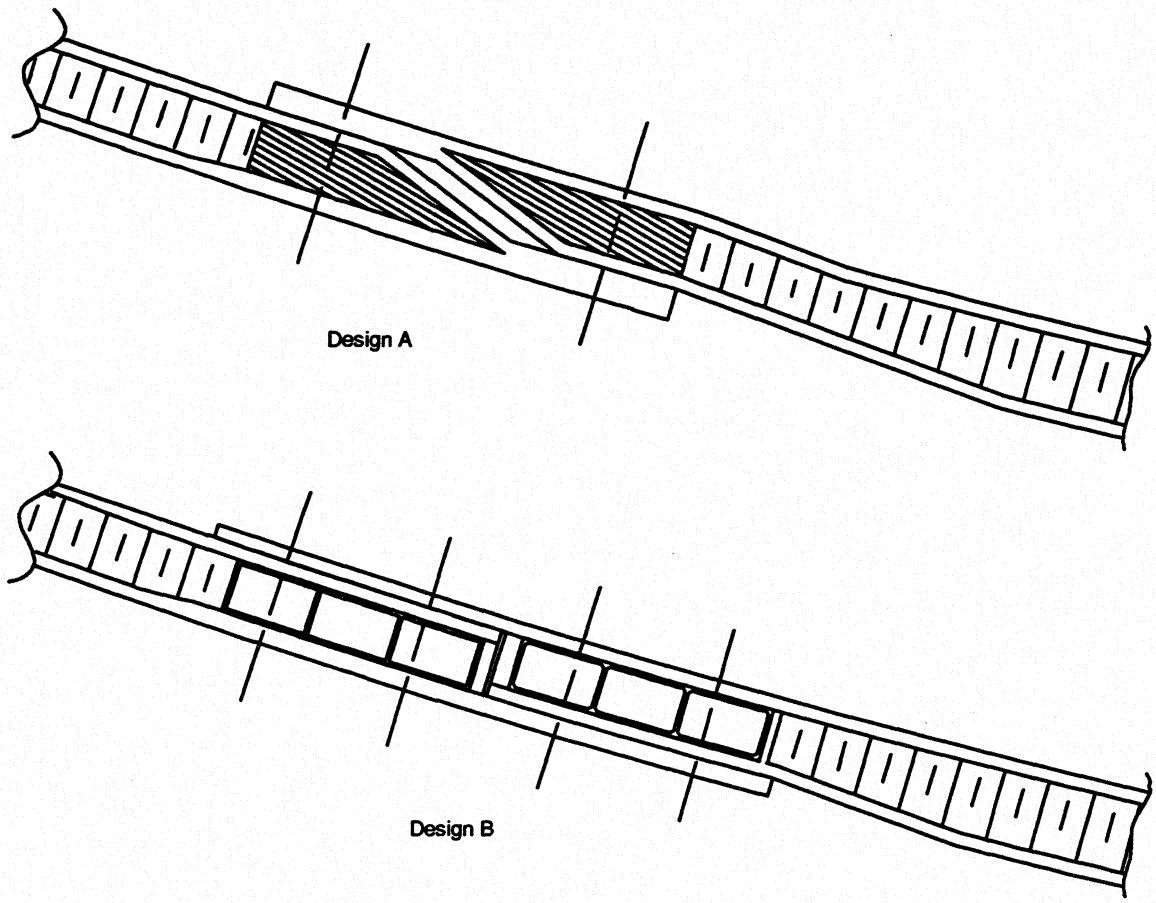

Figure 4-7. Longitudinal Close-outs

The baseline circumferential splice close-out design is illustrated in Figure 4-8. The honeycomb core is machined with partial ramps (top and bottom) to accommodate an external splice plate while maintaining through-thickness symmetry. The adjacent close-out plug could be solid laminate or an injection molded, chopped fiber composite. Panel close-outs are first bonded to the core blanket before it is bonded to the facesheets and frames.

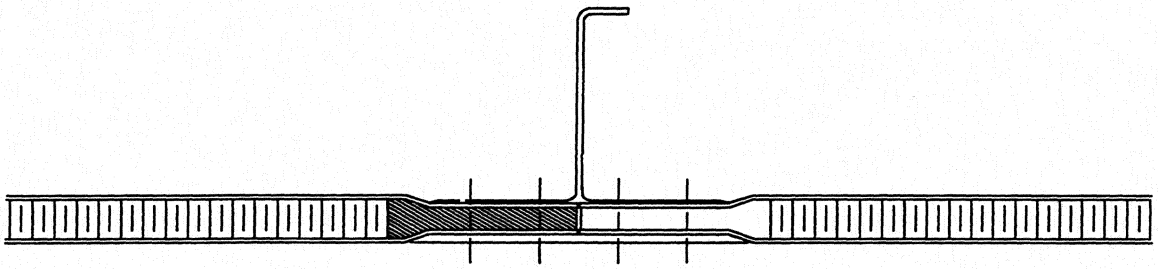

Figure 4-8. Circumferential Splice Close-out Design

Close-outs required for mid-bay penetrations and attachments to the sandwich structure for drain holes, fairings, and antennae would utilize materials and processes similar to those for the splices [26]. Glass-reinforced epoxy may be used for solid inserts to avoid creating a structural hard point in the skin panel. Structural tests (e.g., clamp-up) and detailed cost/weight trade studies are needed to verify performance and cost effective material options for the various close-out concepts.

4.3.7 Tooling

The baseline keel requires tooling similar to that of the crown panel (Section 3.3.7), including an Invar-36 OML cure tool and semi-rigid IML cauls made from four plies of graphite fabric and one ply of Viton TX-4402 rubber. Since the semi-rigid IML flexible cauls will have only a 121" radius contour, the cauls can be made with a low cost flat tool. The frames are located on the cure tool with position fixtures at the ends of the frames. A reusable cure bag is located over the panel assembly. The skins are laid up on a winding mandrel which can accommodate multiple skins at one time. The number of skins is dependent on AFP process efficiency and material out-time limitations. Typical material out-time limitations of 40 days would be sufficient for not more than two full skins since time must be allowed for panel assembly. The AFP winding mandrel must be designed for minimum moment of inertia to maximize acceleration and deceleration of the AFP machine for ply add/drops.

The alternative method (which was not selected) of fiber placing the skin directly on the cure tool would require the AFP machine to be designed as a gantry system similar to a CTLM machine. Additional cure tools would be required to accommodate production rates of five shipsets/month.

4.3.8 Panel Assembly and Cure

The baseline assembly process of the keel panel will be similar to that of the crown panel. The assembly of the skins, core blanket, precured frames, and close-out details will require accurate placement to ensure accumulated tolerances do not jeopardize frame-skin bond integrity. CYTEC's Metalbond 1515-3M film adhesive was selected for cocuring the facesheets to the core and core close-outs because of extensive Boeing experience with this material in similar applications. Since the skins and core contours will need to be accurately located relative to each other to maintain constant overall gage thickness, reference targets designed into the winding mandrel, transfer fixture and OML cure tools will be used during panel assembly. Properly located on assembly, the core blanket will require core stabilization to ensure that details for systems attachments remained in their proper location throughout cure.

Since the keel panel transitions from a thick laminate at the forward end to a sandwich at the aft end, the cure cycle must be developed so that the laminate is fully cured without exotherming. The cure cycle must also be designed for proper adhesive fillet formation at the core interfaces. The cure cycle developed for this thick laminate/sandwich panel is described in Section 4.5.3.

4.4 Manufacturing Issues

The fuselage keel design presents unique processing challenges because of the combination of thick laminate at the forward end and sandwich at the aft end. Sandwich structures are normally processed at autoclave pressures of 45 psi or less. If sandwich panels are processed at pressures greater than 45 psi, facesheet mark-off, core movement, and core crush may occur. If the design includes ramped core, concerns over core crush are even greater. Laminate structures on the other hand, are normally processed at 85-100 psi autoclave pressure. If thick laminates are processed at pressures less than 85-100 psi, poor ply consolidation may occur, leading to porosity between the plies. In frame-stiffened fuselage structure such as the keel, the autoclave pressure must also be high enough to assure a consistent and uniform bond between the frames and the IML facesheet. Table 4-1 lists additional manufacturing issues for production of full scale fuselage quadrant sandwich panels.

Table 4-1. Keel Sandwich Panel Manufacturing Issues

Technology	Issue /Risks
AUTOMATED FIBER PLACEMENT (Skins)	• Process efficiencies need to exceed 25 lbs/hr with less than 10% scrap rate • Need to determine effects of defects or out-of-tolerance control effects (i.e., lap/gap, fiber waviness, add/drop accuracy's). • Verification of AFP tooling for tailored skins, cutouts and panel edges. • Develop process for fiber placement on contoured cores with out core damage.
AFP TOW MATERIAL	• Tack and dimensional control of the tow material form is critical for process efficiencies. • Large panel fabrication may require significant material out-time life capabilities. Baseline Hercules 8552 system is limited to 20 days handling life.
CORE BLANKET	• Tolerance control of core thickness is critical. Core machining accuracy better than ±0.010" is required. • Develop and verify methods for one-sided core machining. • Demonstration of scale-up methods for splicing and stabilization of multiple core pieces and precured details to produce full-size core blankets. • Machining process for HRP and Korex cores must provide suitable bonding surfaces. • Heat forming process must be verified for Korex. • Improved fabrication process control of advanced honeycomb materials is required. Methods and tooling for fabricating full-size core blankets which include locational control of cutouts needs to be verified. • Handling tooling for location and placement of core blanket.
RESIN TRANSFER MOLDING (Frames, splices, close outs)	• Develop process for RTM with system similar to Shell 1895 resin system. • Process control/SPC methods are not currently used for part quality. • Reduce frame flange surface preparation work for subsequent cobonding with peel ply use in RTM process. • Process and tooling flexibility and cost for tailored frames has not been proven (i.e., design thickness variation) • Inspection standards and methods have not been established for precured textile elements. • Verification of tolerance control of frame flange contour. • Design for frame flange spring in/out and frame radius control (121.89" ±.010"). • Improved manufacturing methods to reduce cost are needed for window and door precured elements.
PULTRUSION (Cargo floor elements,)	• Resin system suitable for structural requirements and rapid cure processing requirements may require additional development. • Fiber preform architectures need to be defined and optimized for pultrusion process. • In-situ process monitoring of resin cure is required for part quality control.
PANEL BOND ASSEMBLY	• The methods to transfer and locate facesheets without induced anomalies (i.e., wrinkling, skin thickness variations). • Methods to control or compensate for tolerance stacking at critical locations (i.e., frame and stringer bond regions). Optimal panel assembly methods and supportive tooling required for details needs to be defined and verified. • Tolerance control methods for core blanket location to ensure accurate position of cutouts and panel edges is required to reduce shimming during barrel assembly. • Dimensional tolerance criteria for facesheets, core, and frames must be defined to optimize individual processes to reduce barrel assembly risks due to tolerance stacking problems. • Panel warpage data evaluation from increased panel size for compensation through process/tool concept developments. • Cure cycle process control needs to be developed to minimize warpage and provide uniform cure. • Reliable surface preparation for cobonded elements is required for structural performance.
TOOLING	• OML and IML tooling material selection to minimize panel shrinkage and control frame movement. • Develop tooling to hold +-.010" contour tolerance. • Develop AFP winding mandrel / rotisserie system for panel assembly. • Tool weight and cost. • Design for uniform heat transfer. • Tooling flexibility to compensate for load induced design changes will require verification through multiple panel demonstrations. • Production durability and cost benefit of the reusable cure bag system needs to be verified.

Figure 4-9 shows the potential for tolerance accumulation at the frame-to-skin interface. The tolerance requirements should be controlled to within ± 0.015" in the area underneath the frame web and ±0.030" in the remaining areas.

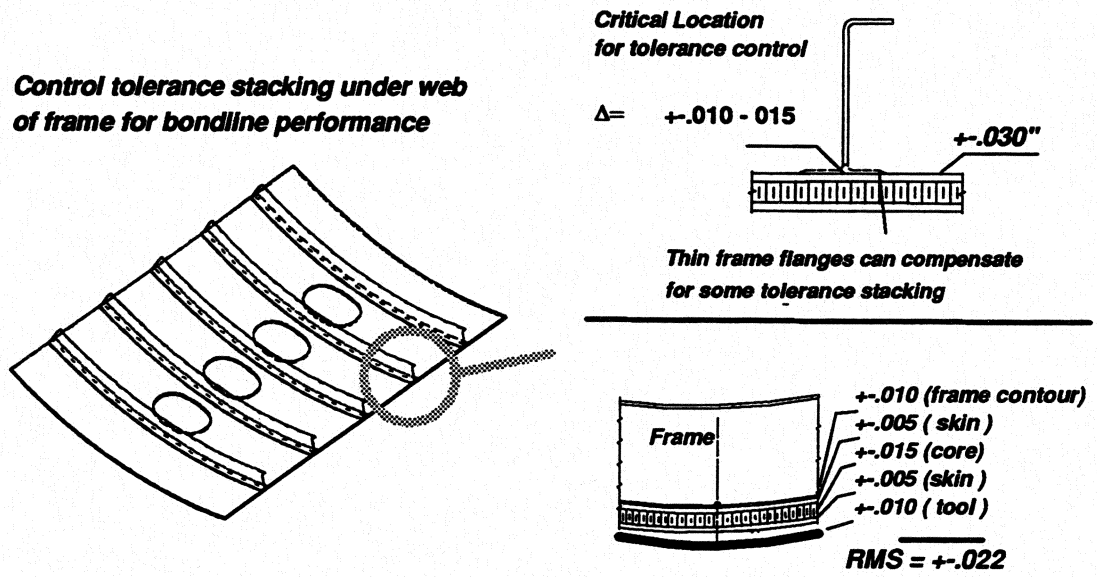

Figure 4-9. Sandwich Tolerance Stacking Issues for Cobonded Frames

4.5 Process/Tooling Developments

A number of small-scale process trials and development efforts were undertaken to resolve the significant manufacturing issues identified in the previous section. These issues included: AFP process efficiency, core blanket fabrication, panel assembly methods, and optimized cure cycle for thick laminate/sandwich panels. The majority of these trials utilized the baseline materials of AS4/8552 prepreg and HRP core; however, an alternative prepreg (T300/F584) and core material Hexcel Thermoplastic Core (TPC) were also included. Since the manufacturing development effort was concurrent with the design development, the early process trials reflect the original keel design (panel thickness tapered at edges, variable height frames) rather than the updated keel design (full-depth configuration, constant height frames). Demonstration hardware fabricated to develop keel designs is illustrated in Figure 4-10.

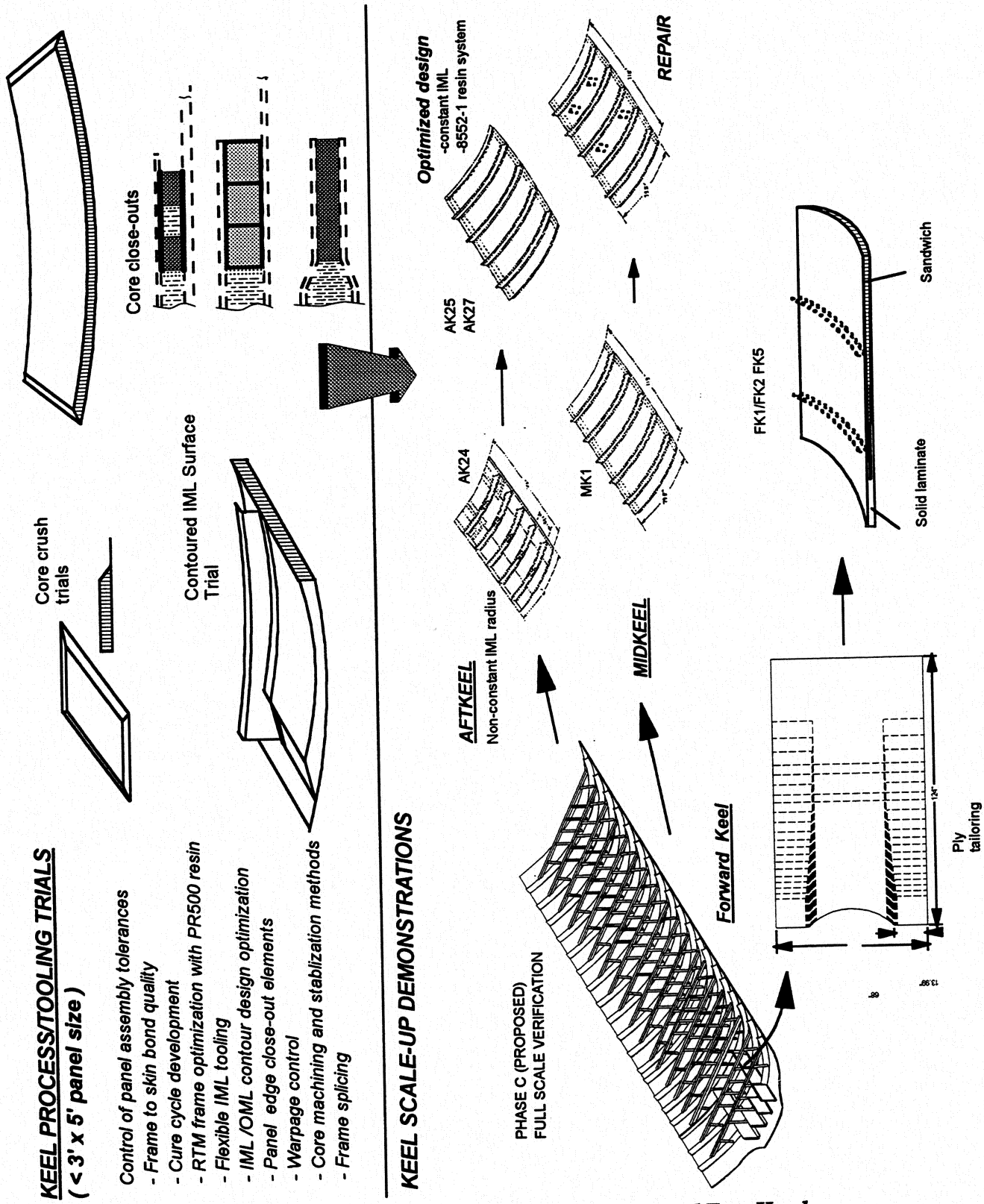

Figure 4-10. Keel Manufacturing Demonstrations and Test Hardware

4.5.1 Core Machining, Forming, and Splicing

Several issues regarding core machining, forming and splicing were resolved by building two 3' x 4' contoured sandwich panels representing the original keel design with tapered edges. Because a contoured, core machining tool was not available, a numerical control (NC) program was developed to machine the core on a flat machined bed. The honeycomb core (HRP-3/16-8.0) was machined so that when it was formed into the cure tool, the core contour matched the lower frame flange contour as shown in Figure 4-11 (exaggerated for clarity). The 20° and 3° tapers were machined without damage by using adhesive stabilization in the tapered core regions.

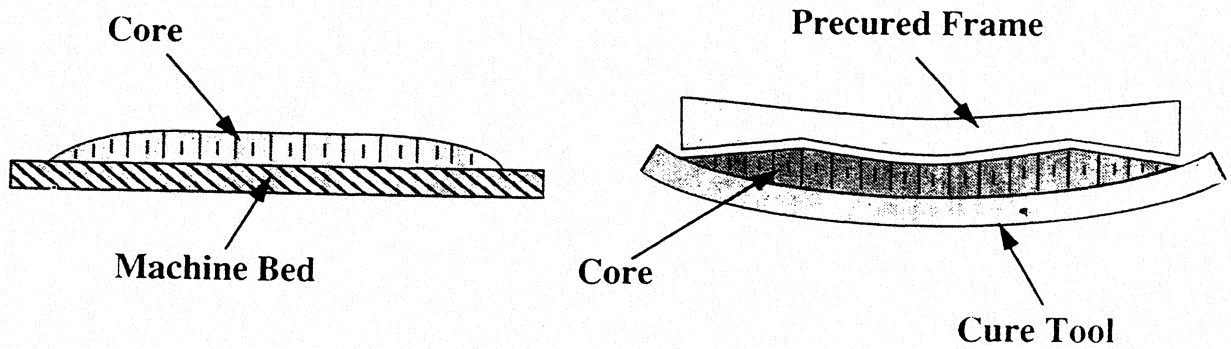

Figure 4-11. Core Machined Flat and Formed to Curvature

Core pieces were formed to a 122" radius contour and then spliced together with foaming adhesive into a full size core blanket. An extensive investigation of thermal forming [3] found that heat forming of HRP honeycomb may be conducted at 450°F with little effect on shear strength and impact damage resistance. A similar effort was initiated to determine a process envelope for Hexcel's TPC material. Results of this preliminary investigation established a heat forming process temperature range of 390-640°F. This temperature is above the Tg of the core (to achieve formability) but below the point where thermal degradation begins. A heat forming process window has not been determined for Du Pont's Korex material. However, thermal degradation is expected to occur in the same temperature region as it occurs for HRP because phenolic resin is used in the fabrication of both materials. An alternative method to eliminate core forming is the use of septimized core in which two thinner core sections are bonded together. Thinner core sections can form to contour without heat forming.

4.5.2 Core Crush Trials

Given the fact that abnormally high autoclave pressures might be required to consolidate the thick forward keel, core crush trials were performed concurrent with the core material screening exercise. The trials were conducted to evaluate the effect of high pressure on tapered sandwich panels with representative geometries (original keel design), candidate cores (Figure 4-12), and toughened epoxy facesheets. The specimens were cured using autoclave pressures of 60, 80, and 100 psi.

Candidate Cores

HRH-10-1/8" (aramid paper/phenolic)
HFT-1/8" (±45 glass/phenolic)
HFT-G-3/16" (±45 carbon/polyimide)
HRP-3/16" (0/90 glass/phenolic)
TPC-3/16" (±45 glass/polyamide-imide)

Foam Filled

HRP-3/16" with k-foam (cyanate-ester)
HRH-10-1/8" with k-foam

Autoclave Pressures
60 psi
85 psi
100 psi

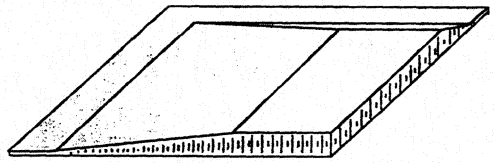

Figure 4-12. Core Crush Trial Candidates

Stabilization of the 3° and 20° chamfers was required to avoid core crush. Facesheet dimples due to core mark-off were reduced with lower cure pressures and reduced cell size. Although foam-filled core prevented core crush up to 85 psi, it had poor impact resistance, eliminating it from further consideration. As discussed previously, the updated keel design eliminated the 3° side tapers and modified the aft tapers to be partial ramps only. Also, a successful effort to reduce the required pressure for concurrent cure of keel thick laminate and sandwich structure (discussed in the following section) alleviated many of the core crush concerns.

4.5.3 Development of Core

A variety of honeycombs, foam-filled honeycombs, and foams were considered for sandwich core materials. Initial cost/weight trade studies identified Hexcel's HRP honeycomb as the best core material for keel quadrant applications as discussed in [24]. Du Pont's Korex honeycomb later emerged as a cost- and weight-efficient alternative. In addition to "off the shelf" products, insitu-foams were evaluated as a lower cost material form.

A process for fabricating fuselage keel sandwich panels by concurrent cure of a foam core and the sandwich facesheets was investigated [27]. This process was of interest for its potential for producing low cost sandwich structure. Low cost was expected to be achieved through elimination of manufacturing processes traditionally associated with machining, splicing, and forming other types of core material (e.g., honeycomb). The process was also expected to provide a strong, reliable bond between facesheet and core through cocure since the resin for the laminate is used, with foaming additives, to produce foam core. The process required a closed-mold operation in which the unreacted foaming material is sandwiched between the two uncured facesheets (Sundstrand's FEF-Foam Expansion Fabrication). Once the foaming material reached temperature, the pressure created during the foaming action was used to consolidate the laminates during final cure [28].

This process was well developed for thermoplastic material systems for core densities greater than 15 pcf. New development efforts focused on 6-12 pcf thermoset core materials. Small foam core sandwich test panels were fabricated using several types of fillers and resin systems including Hercules 8553-40 resin. Both unfilled and chopped carbon-fiber filled foam cores were manufactured. The mechanical properties and impact damage resistance of the foam core were

characterized. The development effort was discontinued due to the poor mechanical performance of the foam core materials relative to honeycomb. In addition, the cost and complexity of a rigid closed-mold tool for high internal pressure containment would not be suitable for quadrant size parts. Additional efforts included resin systems with foaming additives that are tailored to cure at room temperature conditions. Only preliminary studies were conducted to evaluate this material system/process for repair applications.

4.5.4 Sandwich Cure Cycle Development

A cure development task was initiated to establish a procedure for concurrently curing thick laminate and sandwich structures consisting of AS4/8552 facesheets and HRP honeycomb core. Three panels, a thick (1.1", 152 ply) solid laminate, a sandwich panel with 12 ply facesheets and 0.75" thick core, and a thin (12-ply) laminate panel were cured in the same cure cycle. The thin laminate panel was used as a control to observe any effects the core might have on the cure of the sandwich panel facesheets. The panels were instrumented with thermocouples, dielectric sensors, and pressure transducers and processed using a stepped cure cycle recommended by the prepreg material supplier (Figure 4-13). A dwell at 225°F was designed to remove volatiles early in the cure cycle. The dwell at 300°F bleeds off energy from the cure reaction and reduces exotherm of the thick laminate. Initial processing trials indicated that a 40 psi cure pressure is the maximum required for successful cure of sandwich and thick laminate skins.

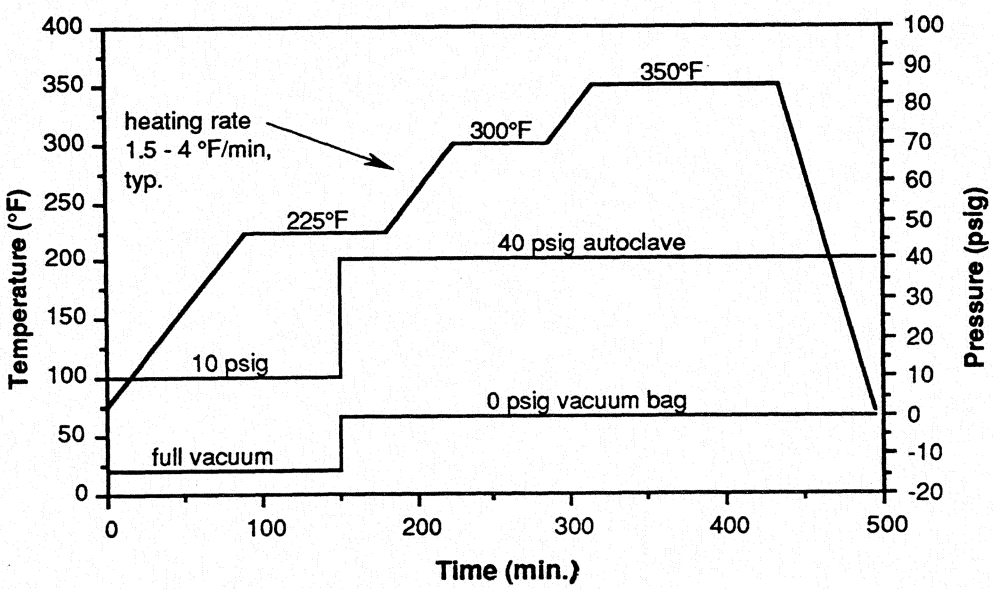

Figure 4-13. Initial AS4/8552 Prepreg Cure Cycle

Post-cure inspections indicated the panels were well consolidated with uniform ply thickness and very little porosity (<1%). Photomicrographs of the thick part and the sandwich structure are shown in Figure 4-14. As predicted by the simulation models, the temperature profile of the thick solid laminate indicated a 40°F excursion during the 300°F dwell. Simulation models also indicated that a slight modification of the cure cycle (a longer hold step at 225°F) would eliminate uncontrolled exotherming.

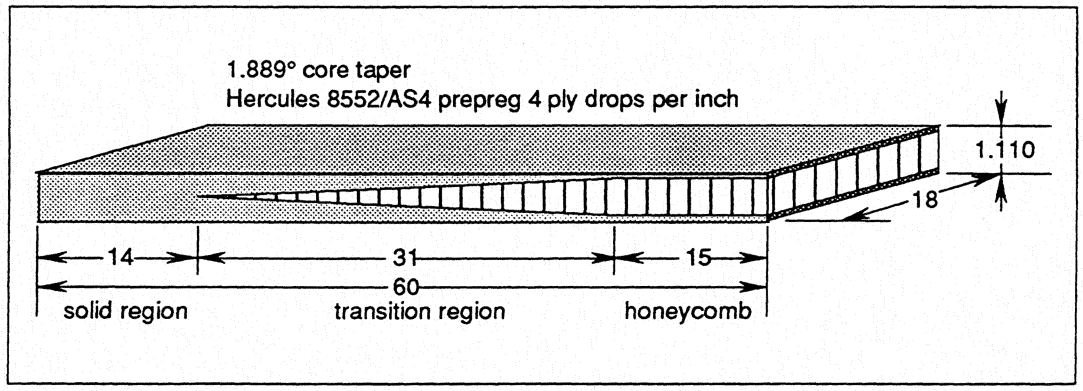

Figure 4-14. AS4/8552 Cured Laminate and Sandwich Structures

The cure was further optimized through modeling efforts conducted by the University of British Columbia (discussed in more detail in [3, 28]). Model predictions indicated the use of a thick OML cure tool could better control the rate of exotherming since the Invar 36 tool material acts as a heat sink. Predictive cure model results suggested autoclave heat transfer characteristics must be defined for each autoclave and autoclave loading configuration. Predictive results of the 2-D model revealed that the insulation characteristics of the core did not produce a significant difference in the cure rates between the IML and OML skins which would create residual stresses in the cured structure. Although the model was not fully calibrated, relative effects of tooling material, heat transfer rates, and variations in structural configurations could be evaluated. Figure 4-15 shows the effects of the CTE mismatch between the tool and skin. Although the tests were small-scale coupons, large-scale parts verify the fact that tooling material must have a CTE similar to the cured part to reduce warpage. One compensation method is to provide a slip plane between the skin and cure tool using FEP film or a comparable low friction release material.

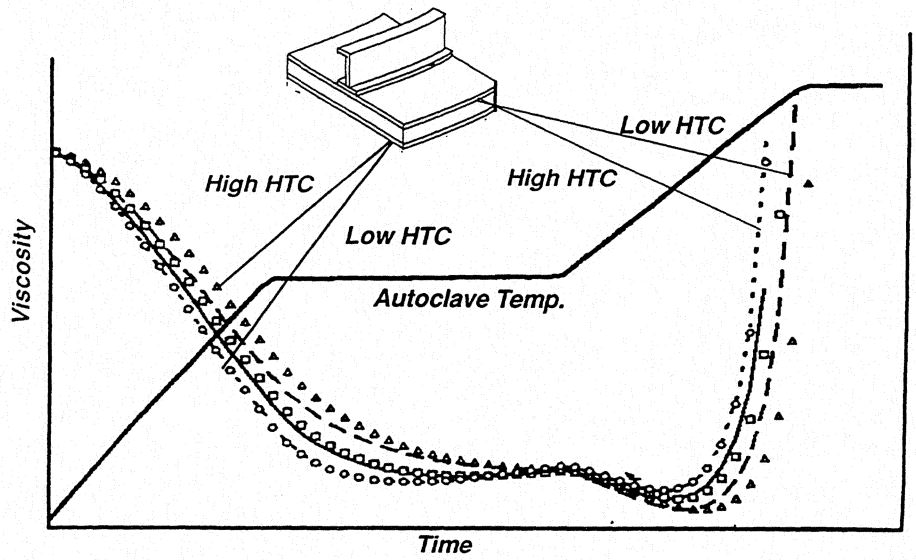

Figure 4-15. Effects of Tooling CTE on Cured Part Warpage

Concurrent consolidation of both thick laminate and sandwich facesheets must be accomplished while avoiding core crush or excess resin bleed from the part edges or into the core. Complete consolidation (i.e., no porosity) is desirable to achieve optimal mechanical performance and to provide a reliable barrier for moisture ingression into the core. Application of vacuum is typically used to draw air and volatiles from the system and compact the part. Autoclave pressure is then used to overcome the vapor pressure of remaining volatiles, and to force resin flow. The resin must exhibit a minimum viscosity which will allow flow for consolidation but inhibit excess resin bleed from the part. This balance of rheology is intensified when cocuring sandwich structure where the autoclave pressure is reacted over a small portion of the part surface area and the resin may be pushed through the fiber bed into the core. Appropriate resin rheology and cure cycle thermal profile are therefore critical to proper consolidation of the keel and side panels.

A processing trial was performed to verify heat transfer analysis and evaluate the quality of structure cured with a step cure process recommended by Hercules. Temperature data compiled during the process trial verified the prediction of an exotherm during the 300°F dwell. The results provided confidence in the ability to predict the thermal profile of a large part during autoclave cure. Subsequent modeling efforts and processing trials showed that the use of heavy Invar-36 tooling inhibits exotherm by acting as a heat sink. The baseline cure cycle has been simplified by elimination of the 300°F dwell originally intended to bleed energy from the system and avoid exotherm.

Sectioning and optical microscopy revealed good consolidation in both thick laminate and sandwich facesheet regions of the panel. Excess resin bleed was not observed from the part edges or into the core. Poor filleting of adhesive to honeycomb cell walls was the sole anomaly noted in the panel. The significance of poor adhesive fillets has not been determined.

4.5.5 Precured-Frame-to-Sandwich Bonding

As discussed previously, the frames for the original keel configuration were designed as segmented details to reduce the risks of matching the frame base to the three contours of a variable IML surface. Fit-up gap between the frame segments and machined core contour was measured at less than 0.010". The keel design was then modified to achieve a constant IML surface and allow a one piece frame design.

Lockheed designed and developed the keel and side circumferential frames with preforms fabricated by Fiber Innovations. The keel and side frames were fabricated with the same technology developed for the crown panel frames, but with a new resin system: 3M's PR500. The keel RTM frame tool was designed with an oil heating system which replaced the conventional oven and strip heaters. Therefore the temperature profile could be managed to ensure that processing conditions for the PR500 resin system were controlled. The PR500 system is a one component injected system where the catalyst is encapsulated with a film that dissolves at specified temperatures. Lockheed developed the RTM processing parameters with PR500 to ensure that the encapsulated catalyst was distributed evenly throughout the part for a uniform cure. Processing development for the braided preform and the PR500 system is discussed in more detail in [35].

4.5.6 Close-outs

A variety of sandwich core close-out design concepts were investigated for use at the longitudinal and circumferential panel splices. Techniques of bonding the close-out to the core blanket and tolerance control of the close-out thickness were evaluated to ensure that the manufacturing methods identified for these precured elements did not increase panel assembly risks.

Longitudinal Panel Splices. Full-depth and ramped core close-out concepts were pursued for longitudinal panel splices. Three types of full-depth close-outs were fabricated. The first concept (Figure 4-17) consisted of a series of braided and resin transfer molded (RTMd) carbon/epoxy tubes. A 2-D 64 carrier braider was used to construct a preform over individual aluminum mandrels. The braided architecture was ±45° with 0° fibers creating a triaxial braid. The individual mandrels were then braided together with two plies of similar architecture. PR500 resin was used to impregnate the preform. The mold was designed with chamfered corners to eliminate resin rich areas that could result in potential sites for microcrack initiation. A cross-section of the core close-out in an aft keel manufacturing demonstration article is presented in Figure 4-18.

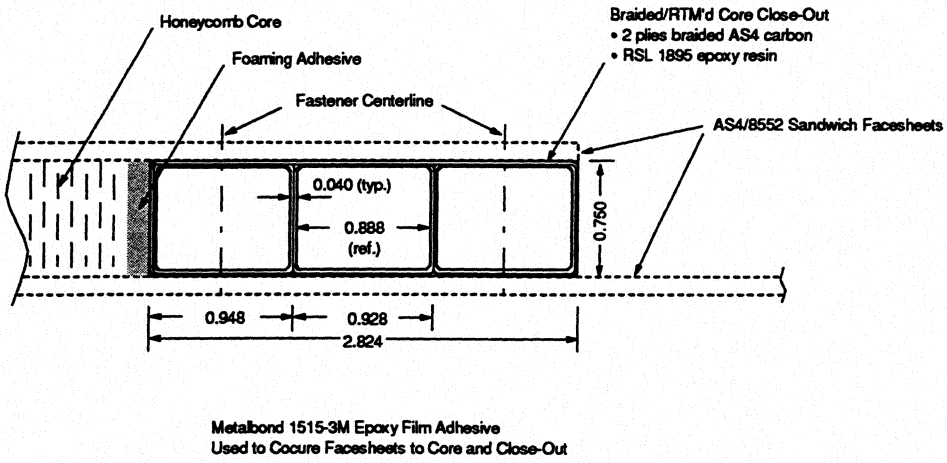

Figure 4-17. Longitudinal Panel Splice Core Close-out Constructed of Braided/RTM'd Carbon/Epoxy Tubes

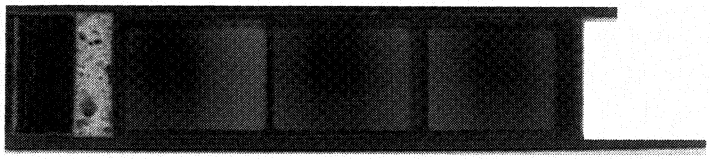

Figure 4-18. Longitudinal Panel Splice Core Close-out Manufacturing Demonstration (Braided/RTM'd Carbon/Epoxy Tubes)

Figure 4-19 shows an alternative design fabricated by braiding over a fly-away mandrel. The mandrel can be constructed with a variety of foams, foam-filled honeycomb, and solid laminates. The solid laminate strips are located along fastener rows to react clamp-up loads. A similar method was used to fabricate close-outs with unfilled honeycomb core as shown in Figure 4-20 and 4-21. Precured solid laminates strips were bonded to honeycomb core prior to braiding the overwrap.

The foam material was required to be compatible with RTM processing capabilities. Initial tests revealed that K foam proved inadequate to resist RTM mold pressures and became infiltrated with resin. An alternative method would be to use an adhesive layer between the core and the braided preform. Prior to resin transfer molding, the mold is heated and the adhesive gels, providing a barrier to prevent resin infiltration into the core.

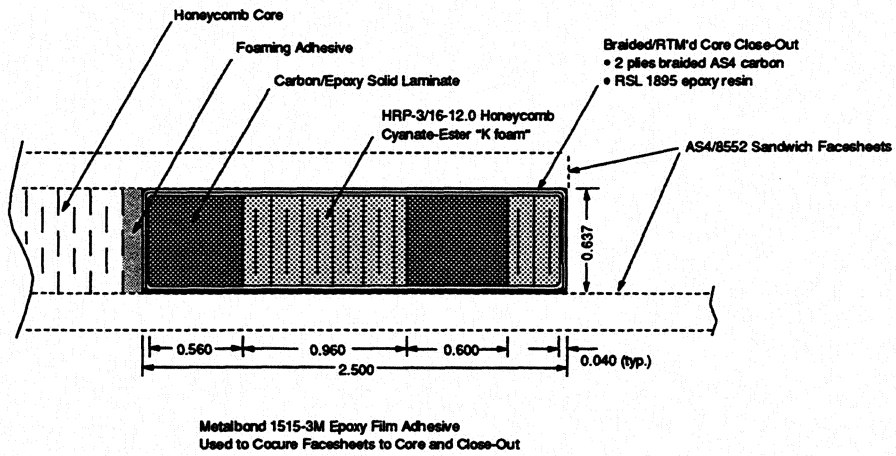

Figure 4-19. Longitudinal Panel Splice Core Close-out with a Braided/RTM'd Tube and Solid CFRP Laminate and Foam Filled Honeycomb Core

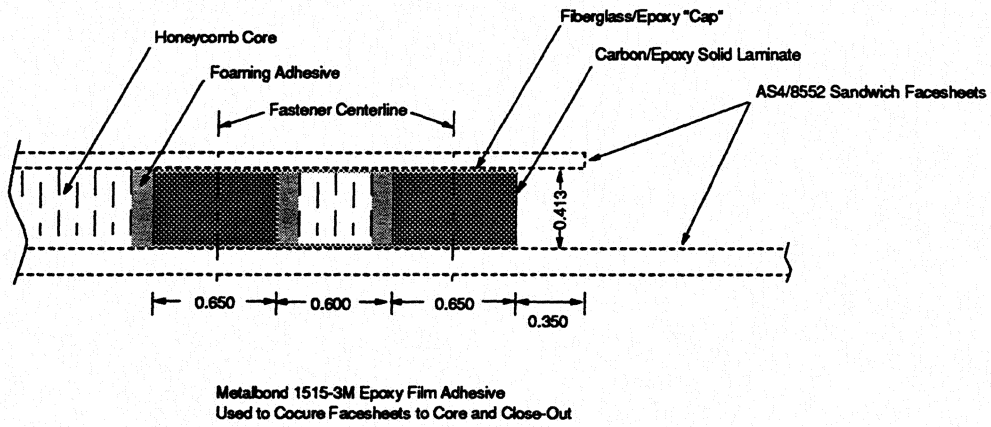

Figure 4-20. Longitudinal Panel Splice Core Close-out Constructed of Solid Carbon/Epoxy Laminate and Honeycomb with Fiberglass/Epoxy Caps.

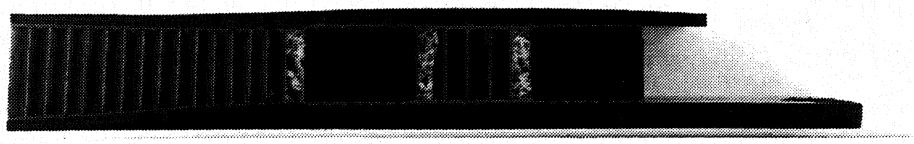

Figure 4-21. Longitudinal Panel Splice Core Close-out Manufacturing Demonstration (Solid Carbon/Epoxy Laminate and Honeycomb with Fiberglass/Epoxy Caps).

A ramped core close-out concept was demonstrated using syntactic-foam-filled honeycomb with a fiberglass overwrap as illustrated in Figure 4-22. The honeycomb was foam-filled to improve fastener clamp-up resistance; the fiberglass overwrap was included to improve resistance to moisture ingression. A cross-section of the core close-out in a longitudinal splice test panel is presented in Figure 4-23.

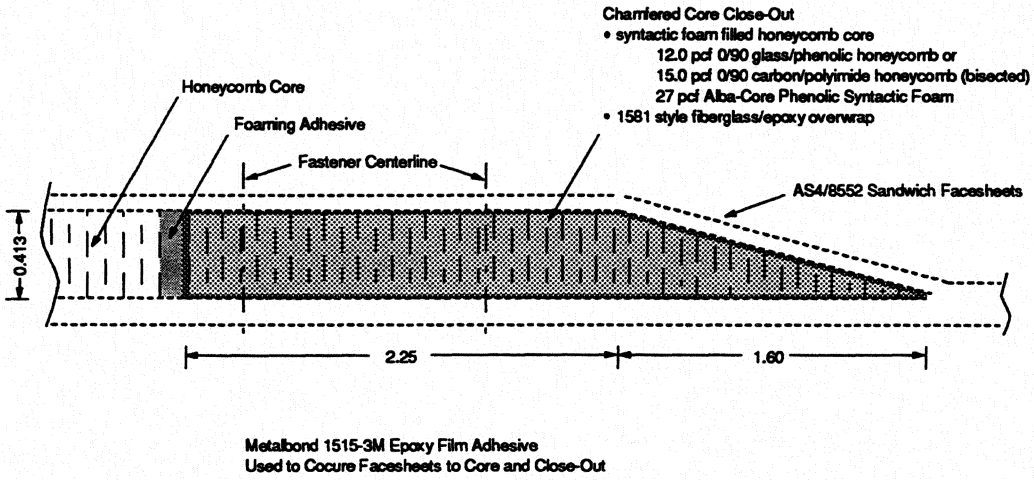

Figure 4-22. Longitudinal Panel Splice Core Close-out Constructed of Chamfered Foam Filled Honeycomb with Fiberglass/Epoxy Overwrap

Figure 4-23. Longitudinal Panel Splice Core Close-out Manufacturing Demonstration (Chamfered Foam Filled Honeycomb with Fiberglass/Epoxy Overwrap)

Circumferential Panel Splices. Two versions of a circumferential splice close-out for the aft keel were demonstrated. Both included partial ramps on each side (top and bottom) of the panel to accommodate splice plates as illustrated in Figures 4-24 and 4-25. The design configuration in Figure 4-24 included honeycomb core in the ramp regions; the design configuration in Figure 4-25 used a solid tapered laminate. The solid laminate design required labor intensive ply tailoring with accurately machined surfaces. The use of core in the ramped region increased the risk of out-of plane fiber distortion at the core to solid laminate transition.

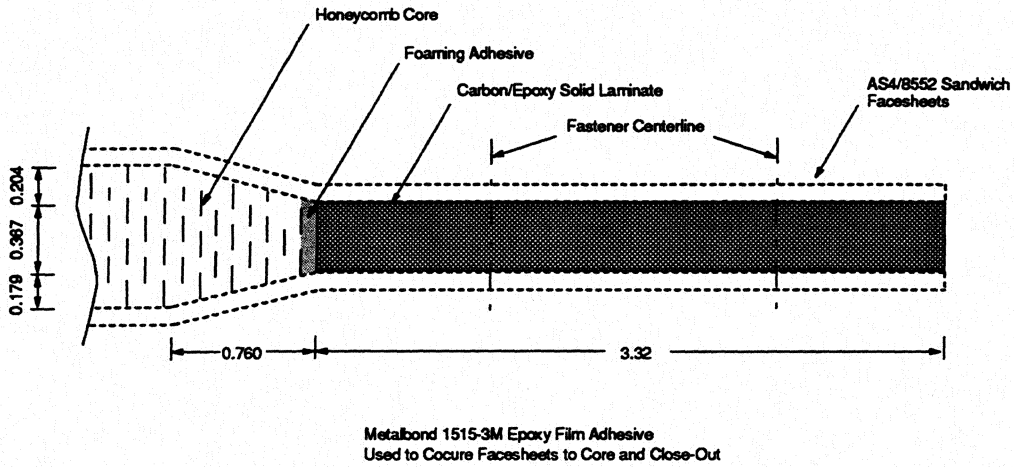

Figure 4-24. Circumferential Panel Splice Core Close-out

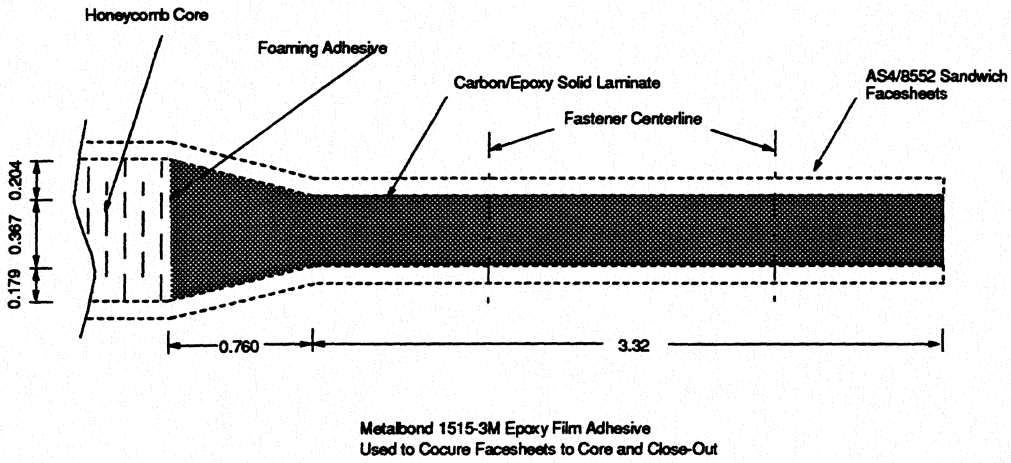

Figure 4-25. Modified Circumferential Panel Splice Core Close-out

4.6 Large Subcomponent Panel Demonstrations

Since the keel quadrant is subject to significant load variations along its length, multiple test panels were made representing the forward (FK1, FK2, FK5), mid (MK1), and aft (AK24, AK25) sections as previously shown in Figure 4-10, with more description in Table 4-2. These manufacturing demonstrations focused on verification of cure cycle parameters, AFP of highly tailored skins, cobonding of frames, core forming/machining/stabilizing, and warpage and dimensional control. Smaller flat and configured test panels were fabricated for longitudinal and circumferential splice coupons in an effort to develop the structural performance database for a variety of core close-out designs.

Figure 4-26 shows the high degree of ply tailoring and core contours for the forward keel section just behind the wheel wells. Material for the subcomponent included the current Boeing-qualified toughened system Hexcel T300/F584 and Hercules AS4/8552. The T300/F584 system was used for early manufacturing demonstrations (AK24 and tooling trials) due to lack of availability of the Hercules AS4/8552 system. The AS4/8552 system was used for subsequent demonstration panels for the forward, mid, and aft keel sections. Development efforts focused on the Hercules AS4/8552 system for AFP efficiency and cure processing for thick laminate, sandwich structure and cobonded frames [3,29].

Tooling trials for several longitudinal and circumferential core close-outs designs were fabricated for subsequent tests and used in the large-scale demonstration panels to evaluate core blanket and panel assembly, and dimensional accuracy. The risks associated with cobonding a precured frame onto a contoured IML surface were evaluated through the first large-scale demonstration panel (AK24). The designs of the remaining manufacturing demonstrations featured a constant radius IML. The additional manufacturing demonstrations were designed for subcomponent tests and to develop a manufacturing database for sandwich panel fabrication.

Table 4-2. Description of Manufacturing and Structural Panel Fabrication

Panel ID	*Laminate Material*	*Core*	*Cobonded Elements*	*Manufacturing Issues*	*Structural Issues*
FK1	• AS4/8552 36-50 plies/facesheet • Tow material form	• HRP (12 pcf)	• None	• Control of constant IML - OML gage thickness. • Cure cycle • Laminate quality	• Load redistribution
FK2	• AS4/8552 36-50 plies/facesheet • Tow material form	• HRP (12 pcf)	• None	• Control of constant IML - OML gage thickness. • Cure cycle • Laminate quality	• Load redistribution
FK5	• AS4/8552 • Tow, fabric material form 26-47 plies/facesheet	• HRP (12 pcf)	• None	• Control of constant IML - OML gage thickness. • Cure cycle • Laminate quality	• Load redistribution
MK1	• AS4/8552 • 30-plies/facesheet • Tow, fabric material form	• HRP (12 pcf)	• 5 precured J frames • Longitudinal close-outs • Full-depth close outs	• Control of constant IML - OML gage thickness. • Cure cycle • Laminate quality • Panel shrinkage • Panel assembly tolerance control • Repair process	• Load redistribution • Repair concept evaluation/ validation
AK24	• T300/F584 12 plies/facesheet • Add to 14 ply and 16 ply facesheets in the aft corners)	• HRP (8 pcf) • 3° taper at longitudinal splice	• 5 precured J frames	• Tooling trail - assess panel assembly and dimensional tolerance control. • Control of constant IML - OML gage thickness. • Cure cycle • Tow placement accuracy • Repair process trials • Laminate quality	• N/A
AK25	• AS4/8552 12 ply face sheets • Tow material form	• HRP (8 pcf)	• 5 precured J frame • Full depth longitudinal close-outs • Partial ramp circ, close-out	• Control of constant IML - OML gage thickness. • Assess new panel assembly approach • Cure cycle • Laminate quality • Incorporation of close-out details	• Compression damage tolerance • Compression after Impact

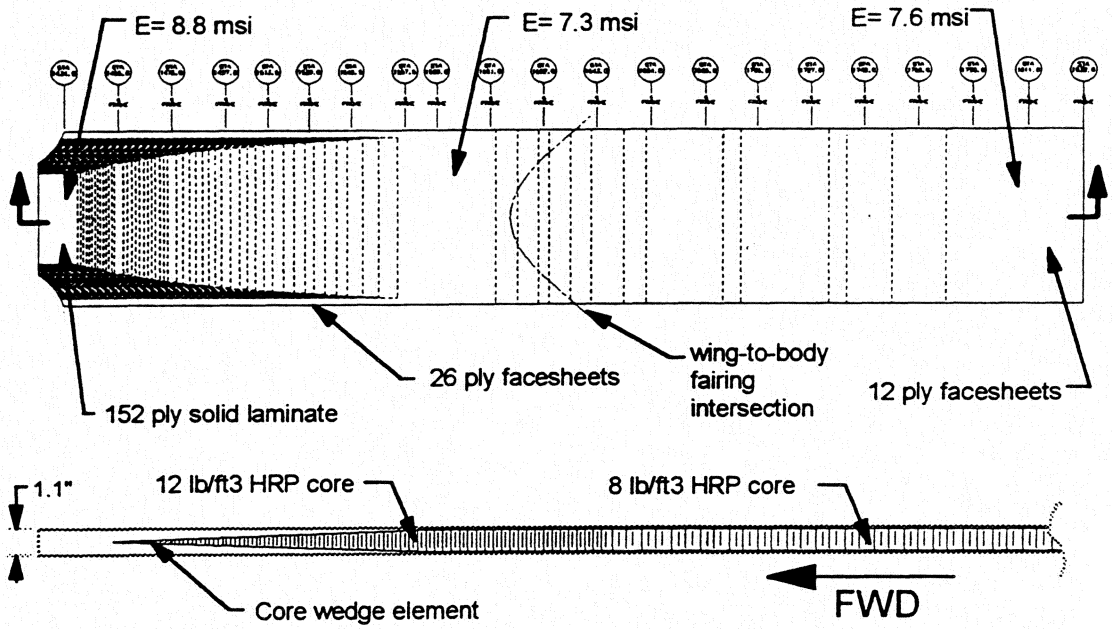

Figure 4-26. Keel Panel Configuration Modifications

4.6.1 AFP Process

The skins for the keel demonstration panels were fabricated with the BCA head with 24 tows. Lap and gap criteria were 0.00 and 0.030 respectively. Since the BCA head could only cut the bands at 90°, manual labor was required to cut the ply drop-off edges for all 45° plies. Modifications for implementing a variable angle band cut or TCA head would be required for acquiring sufficient pay-out rates if angle cuts are required. Measurements of gaps between bands and alignment of bands through the thickness were monitored. Process parameters such as head pressure, creel temperature, heating and cooling roller temperature were developed for the Hexcel T300/F584 and AS4/8552 material systems.

The skins were fabricated individually on the same AFP mandrel as was used for the crown. First the OML skin was fabricated and positioned on the OML cure tool, followed by the IML skin fabrication and placement. Ply drop locations and orientations were identified for panel assembly references. Measurement of skin shrinkage was monitored with targets on a few of the panel skin surfaces.

4.6.2 Core Blanket Fabrication

The core blanket was assembled from rough-cut pieces of 1" thick, 3/16" cell, HRP fiberglass/phenolic core (8 and 12 pcf). Individual pieces were formed at 450°F for 90 minutes on the Invar-36 cure tool. Some spring back or incomplete forming of the core was observed particularly on the 12 pcf pieces. This indicated that compensation for spring-back, built into the core forming tool to "overform" the core, will be required to produce nominally configured core. Individual core sections were spliced with BMS 5-90 (CYTEC's FM-490 foaming adhesive) at 350 °F with a stabilization layer as described in Section 4.3.5. The stabilization layer acted like a skin and was used to stiffen the core, permitting easier handling. The stabilization layer also provided a means of securing the core for machining (Figure 4-27). An optional manufacturing method of

method of splicing the core together during, rather than before, panel cure resulted in local laminate voids from insufficient foaming adhesive, or lack of core-to-skin bond due to excessive foaming.

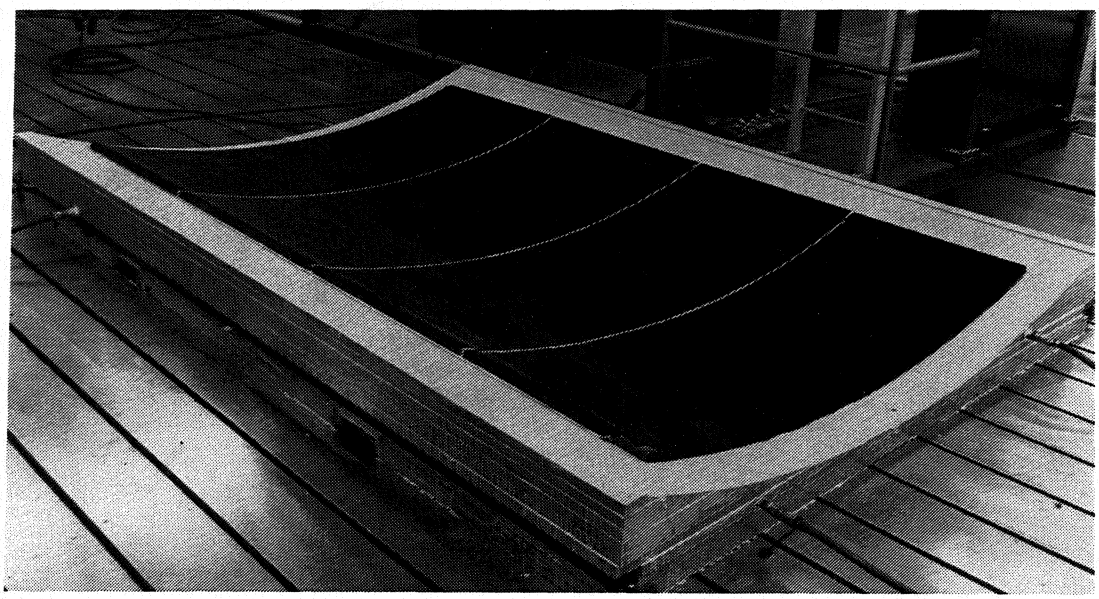

Figure 4-27. Core Blanket Machining, Mill Fixture

Significant core thickness variations resulted from machining accuracy of only ±0.020" and insufficient pressure to force the core blanket to the core machining fixture. Figure 4-28 shows the variation in core blanket thickness of one forward keel demonstration panel (FK5) which is typical of the other demonstrations panels. Accurate core machining to within ±0.005" can be achieved with technologies such as ultrasonic cutting as shown in Figure 4-29.

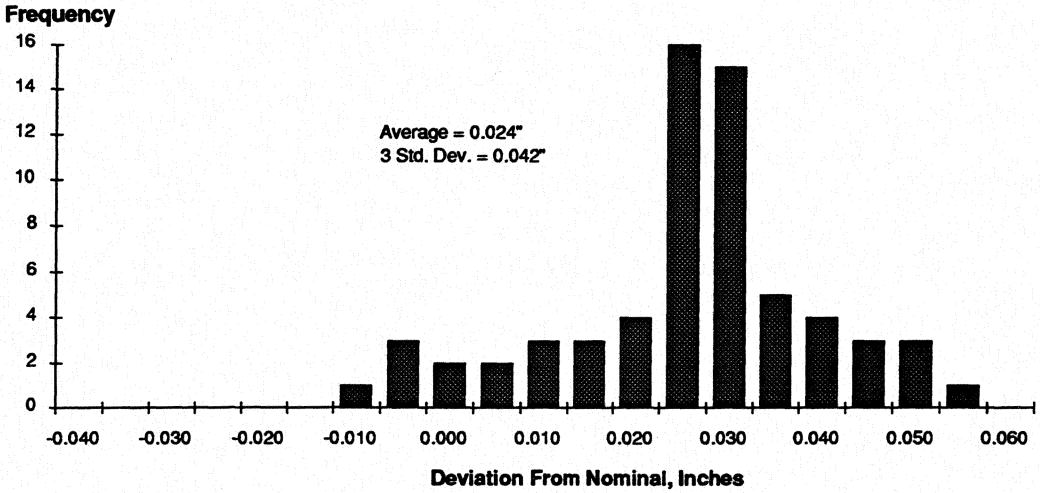

Figure 4-28. Core Thickness Variation Chart - Forward Keel Panel (FK5)

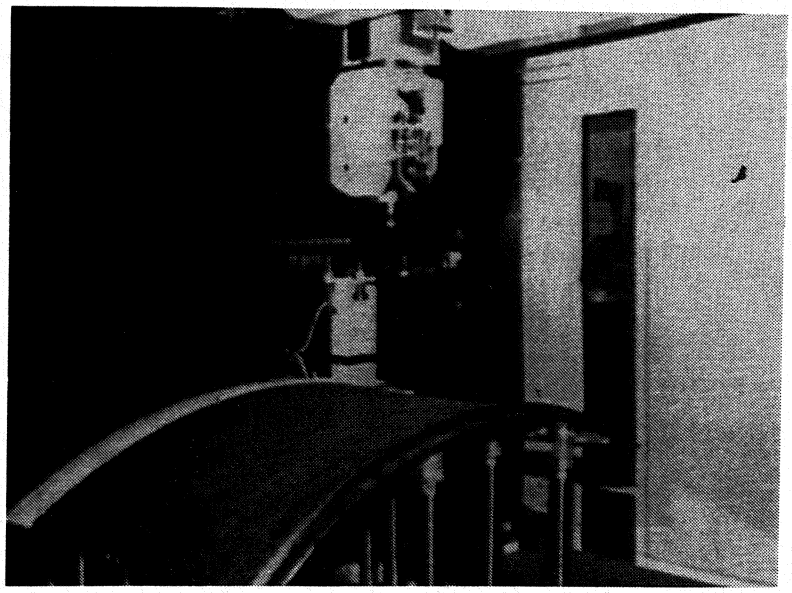

Figure 4-29. Ultrasonic Core Machining

4.6.3 Panel Assembly

All keel demonstration panels were fabricated with essentially the same manufacturing approach although some did not include cobonded frames. The assembly of the two uncured facesheets, the honeycomb core blanket, close-outs, and pre-cured circumferential J-frames, used the OML cure tool as the assembly tool. Synspand X9899 foaming adhesive was placed in the gap between the individual core pieces and between the core and close-outs. Adhesive film (0.009" thick) was placed between bonding surfaces of frames, core details, and skin. Surface preparation was required on all precured elements such as the base flange of the precured J-frame. Frames were located on the IML skin surface using fixtures at the ends of the frames. Mislocating these details results in mismatch between the honeycomb core tapers and the facesheet ply drop-offs. Gap measurements between the frame flanges and the IML facesheet revealed the frame and core contours matched within 0.006". Tooling aids were used between the split frames to maintain their alignment. Similar to the crown panel assembly, graphite-reinforced, fluoroelastomeric cauls were placed in each frame bay to aid in controlling resin flow. During panel assembly, frame, core and skin movement were monitored in an effort to determine the relationship between panel shrinkage and tolerance control of individual elements. The location of each detail was measured before and after cure to determine what modifications are required to compensate for panel shrinkage for accurate frame spacing. Design features such as the 3° side edge tapers on AK24 required a great deal of dimensional inspection of the core and frames, prior to panel assembly, to accurately locate the frames to the core contour.

4.6.4 Panel Cure

The cure cycle developed for the Hercules 8552 system [3,29] was used for the keel panel fabrication. The typical cure cycle has a temperature ramp straight to 350°F. Optimization of the cure cycle revealed that this process condition would cause exotherming conditions of up to 40°F in the forward keel area. Modifications to the cure cycle included a hold in temperature at 225°F, prevented exotherming. Figure 4-30 shows the cure cycle for one subcomponent panel. Low flow

resin systems such as Hercules 8552 typically require higher pressure (≥ 85 psi) for sufficient resin flow to ensure full skin compaction and the elimination of voids.

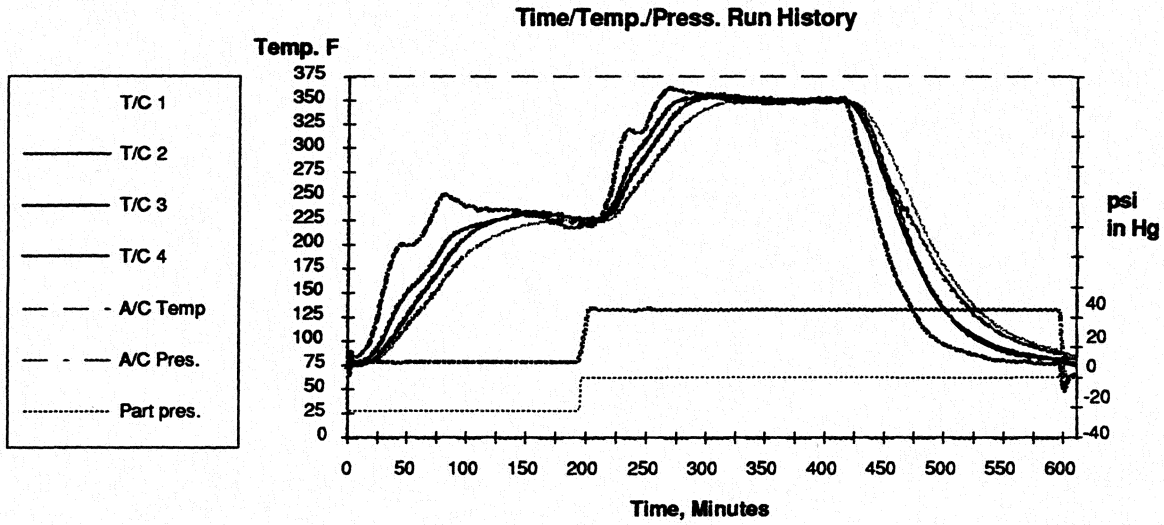

Figure 4-30. Autoclave Cure Chart - Panel FK5

4.6.5 Panel Evaluations

Inspection of the cured panels used many of the same technologies applied the crown panels including Pulse Echo, TTU, X-ray, and cross-section photomicrographs. The first aft keel demonstration panel (AK24) inspection results showed core crush toward the center of the panel which dragged the facesheets and frames, and induced out-of-plane fiber distortion. Facesheet wrinkles were evident in the IML surface near the frames (Figure 4-31) indicating either core or frame movement [23]. In addition, the frames bowed toward the center of the panel. The amount of panel shrinkage indicated by frame movement was significantly more than the skin theoretical chemical and thermal shrinkage.

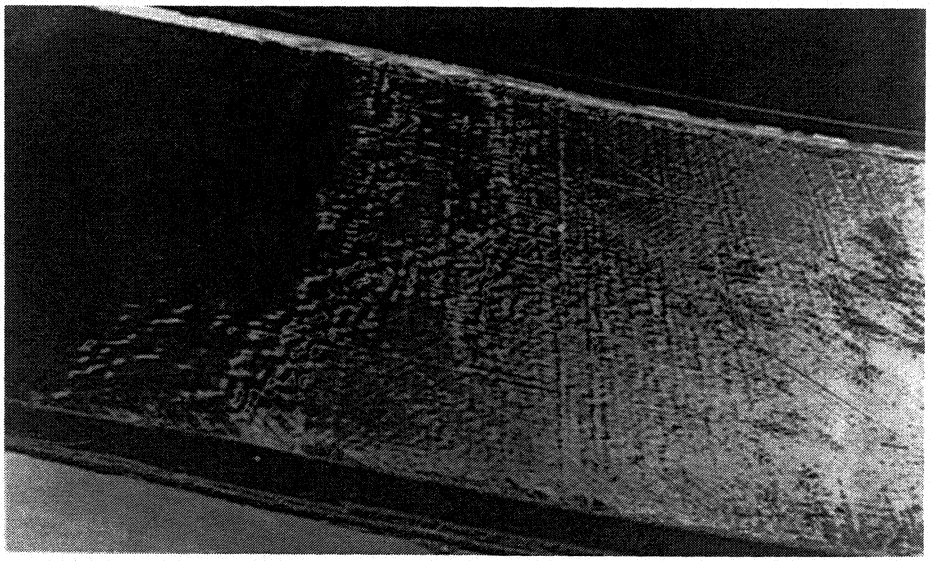

Figure 4-31. Facesheet Wrinkles

Sections of the cured panel removed for microscopic inspection revealed the facesheets were free of porosity. The frames bonded well to the IML facesheet indicating the movement probably occurred after the frame adhesive gelled. An x-ray inspection showed core deformation throughout the panel (Figure 4-32). Figure 4-33 illustrates the severity of the core crush in the 3° tapered edge regions.

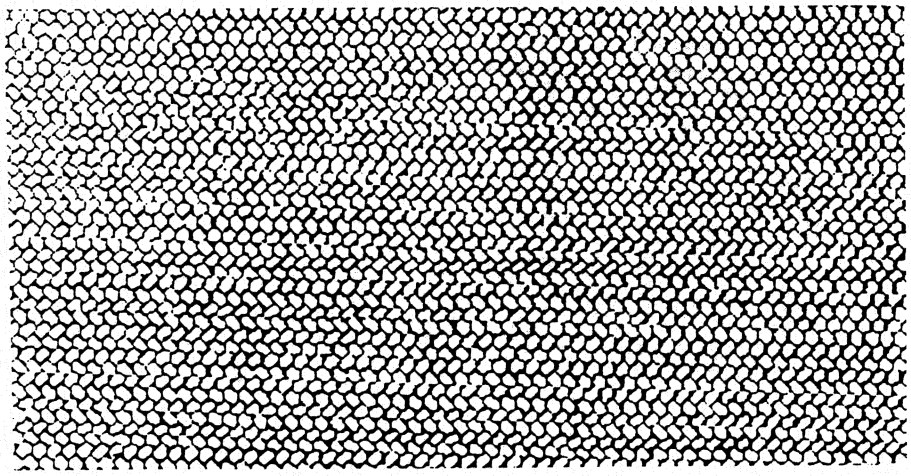

Figure 4-32. Honeycomb Core Crush

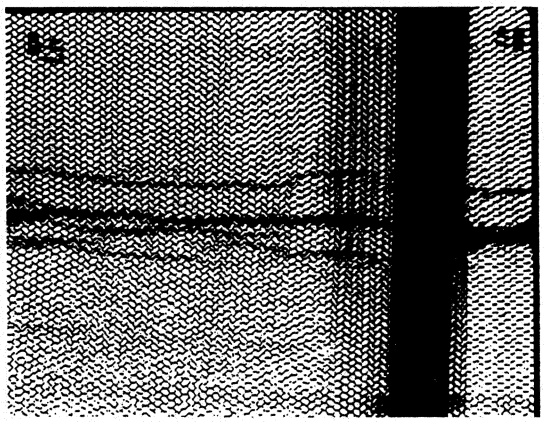

Figure 4-33. Honeycomb Core Crush in the 3° Edge Tapers

A fiber-optic device, calibrated to detect and measure vacuum in sandwich panels, was employed to further analyze the panel. Full vacuum was measured in the center of the panel, while reduced vacuum was found towards the panel edges as shown in Figure 4-34.

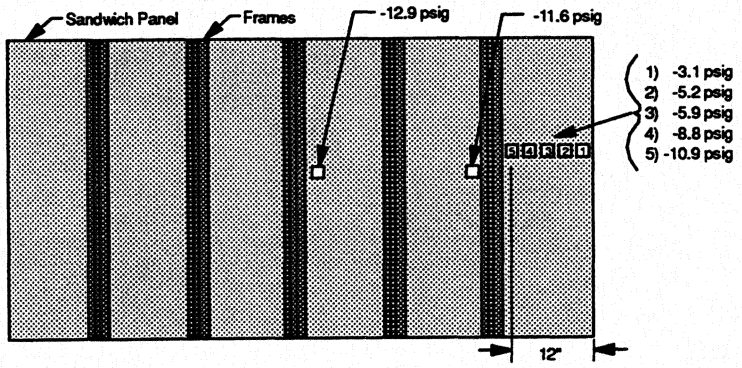

Figure 4-34. Cured Panel Vacuum Analysis

Elimination of entrapped vacuum was verified with additional keel manufacturing demonstrations with reduced vacuum (10 in/Hg) during panel assembly instead of 29 in/Hg.

Forward Keel Demonstration Inspection

The forward keel demonstration panels were all inspected with TTU performed at 1 MHz with no rejectable indications of non uniformity in the panel. Since there were no TTU standards available for AS4/8552 sandwich panels, uniformity in conjunction with destructive evaluation were used to assess internal panel quality.

The OML surface quality was marginal compared to the IML where the FEP coated tooling was used. The FEP leaves a smooth gloss finish without pitting. Conversely the OML skin on the Frekoted Invar tool had a large amount of resin starved pockets (pits), the majority of which are located at the intersection between warp and fill tows in the fabric ply. This type of behavior was also observed in side panel fabrication (Section 5.5.1).

The ability to control panel thickness was measured on some of the keel manufacturing trials. Figure 4-35 is a plot of the measured after-cure thickness of FK5. Variation of the thickness gets wider towards the end of the panel where significant facesheet and core tailoring were occurring. This would indicate that improper indexing during panel assembly had occurred between the ply drops and the core. Also contributing to the variation would be the core thickness variation shown previously in Figure 4-29.

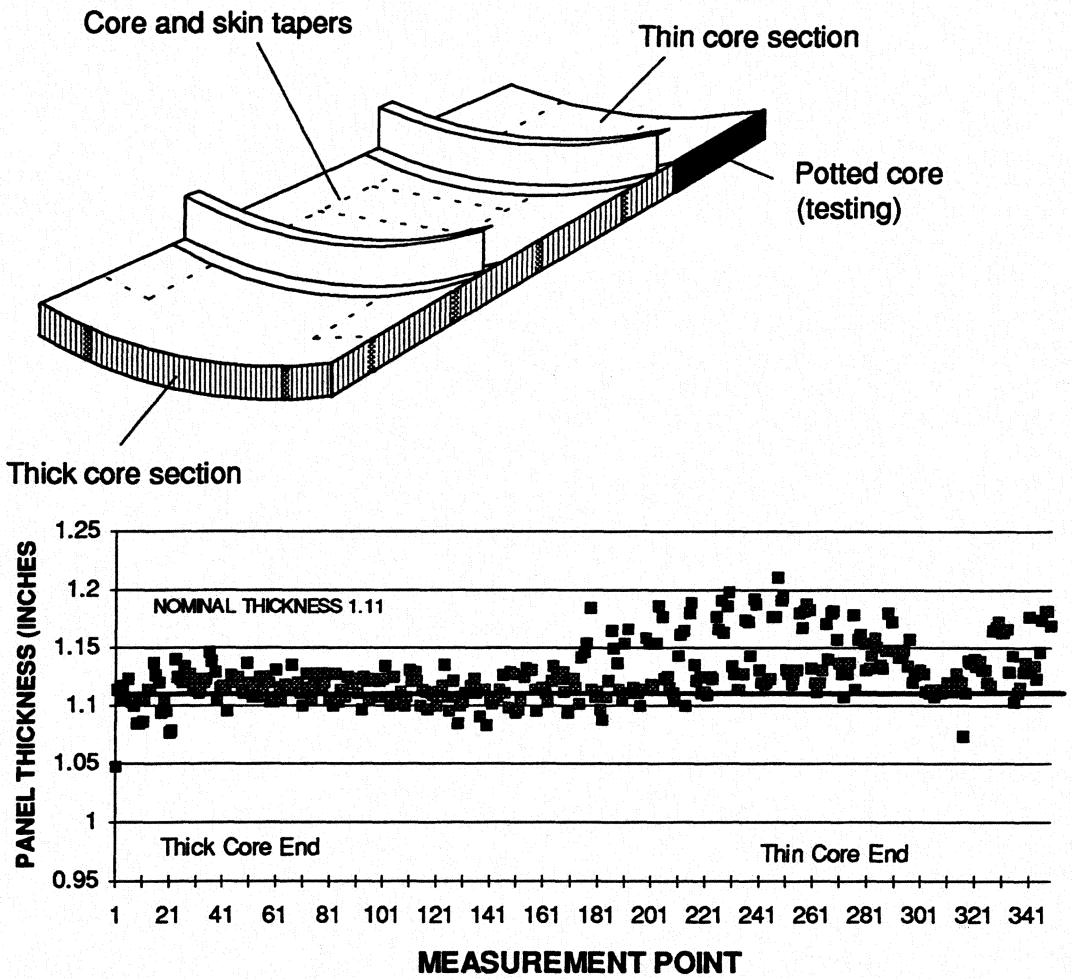

Figure 4-35. FK5 Post Cure Panel Thickness Chart

Core movement during cure was tracked by placing targets in selected core cells during panel assembly, and then X-raying the locations after cure. Figure 4-36 shows the core growth (typical for fiberglass core) over the full 128" length of the panel.

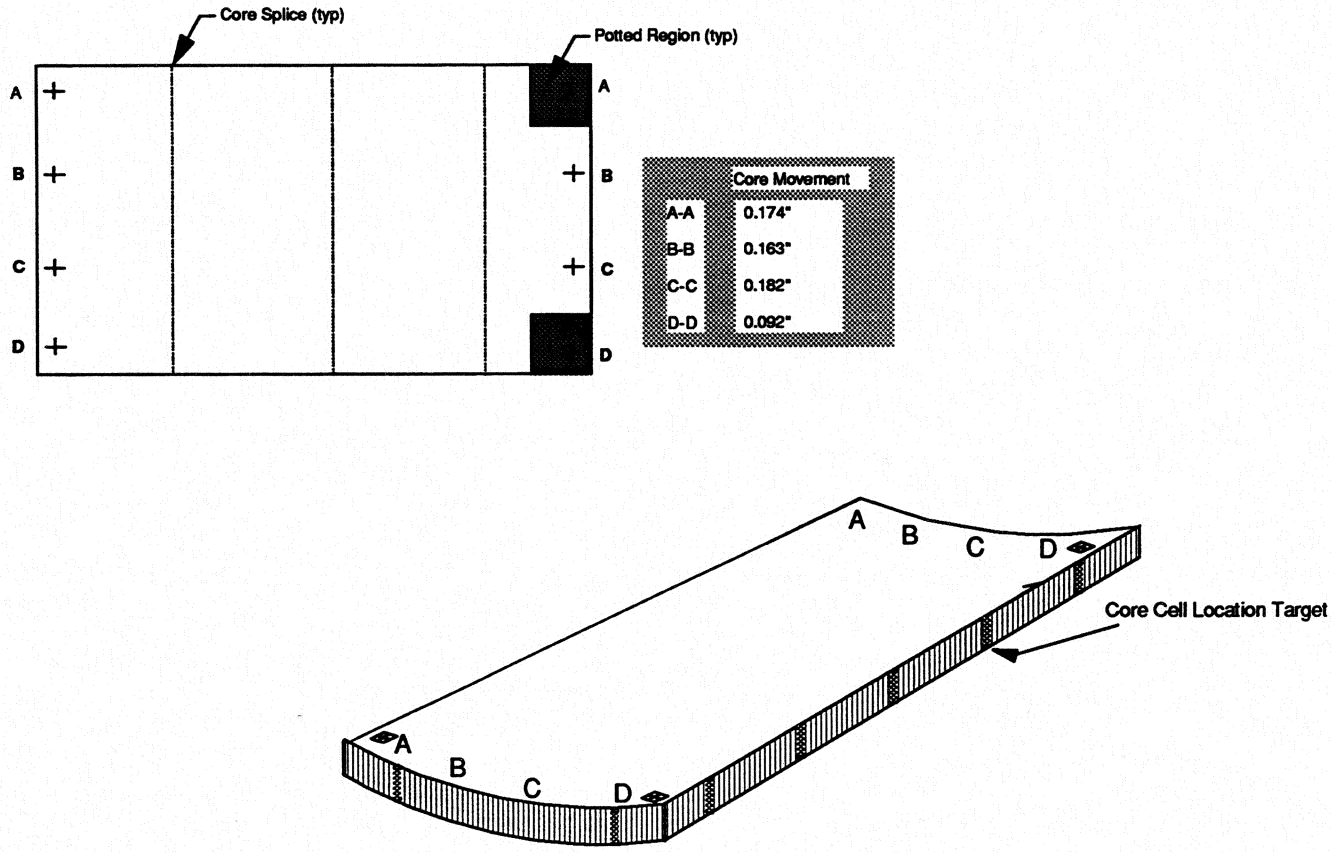

Figure 4-36. FK5 Core Movement Chart

Panel shrinkage was also measured on FK5 by placing optical targets on the surface of the panel and digitizing the locations of those targets before and after cure. The difference between the before and after measurements are shown in Figure 4-37.

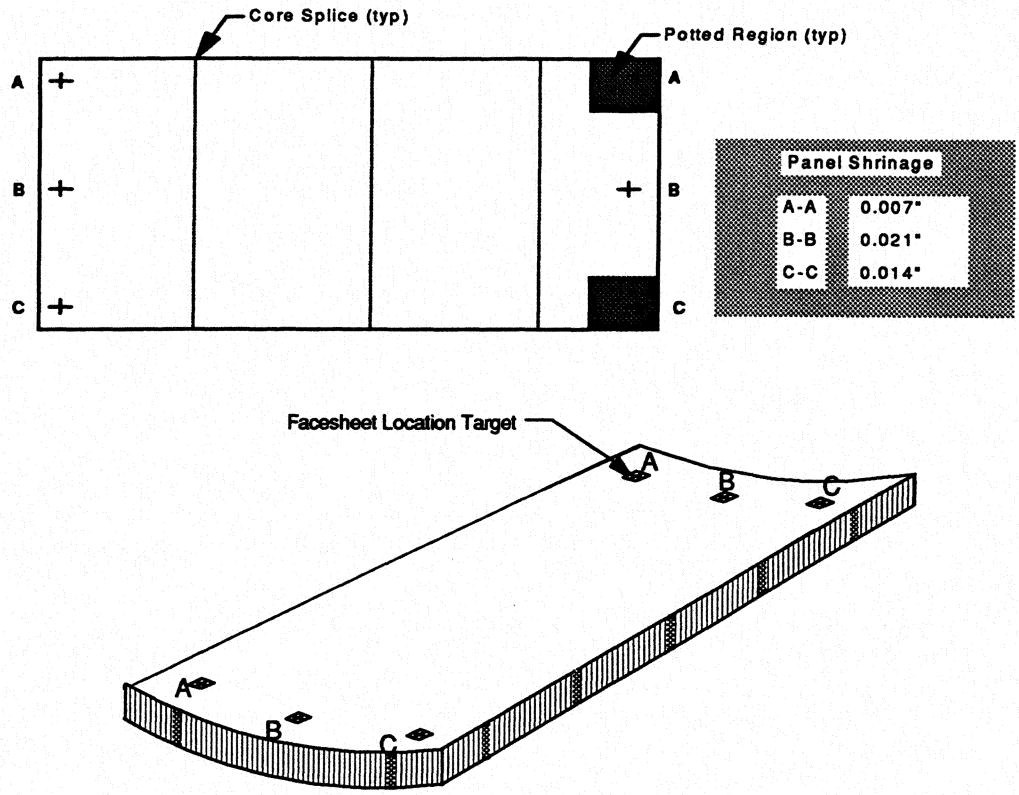

Figure 4-37. FK5 Panel Shrinkage Chart

5.0 SIDE MANUFACTURING DEVELOPMENTS

The left fuselage side panel containing a passenger door was selected for trade study by the DBT. The manufacturing and structural database generated for the crown and keel quadrants was used to develop and evaluate two competing design concepts, illustrated in Figures 5-1 and 5-2. The more complex design details of the side panel relative to the other quadrants (e.g., window and door details) required more evaluation in the trade studies.

The cost and weight estimates for the two side quadrant designs were derived from evaluation of many variables. These included material systems, fabrication processes, structural configurations, and subassembly details. The trade studies included risk assessments associated with the design and manufacturing assumptions used for each configuration. Once technologies were identified, and associated risks assessed, fabrication demonstrations were used to develop tooling concepts and fabrication processes, evaluate structural performance, and validate the risk assessment.

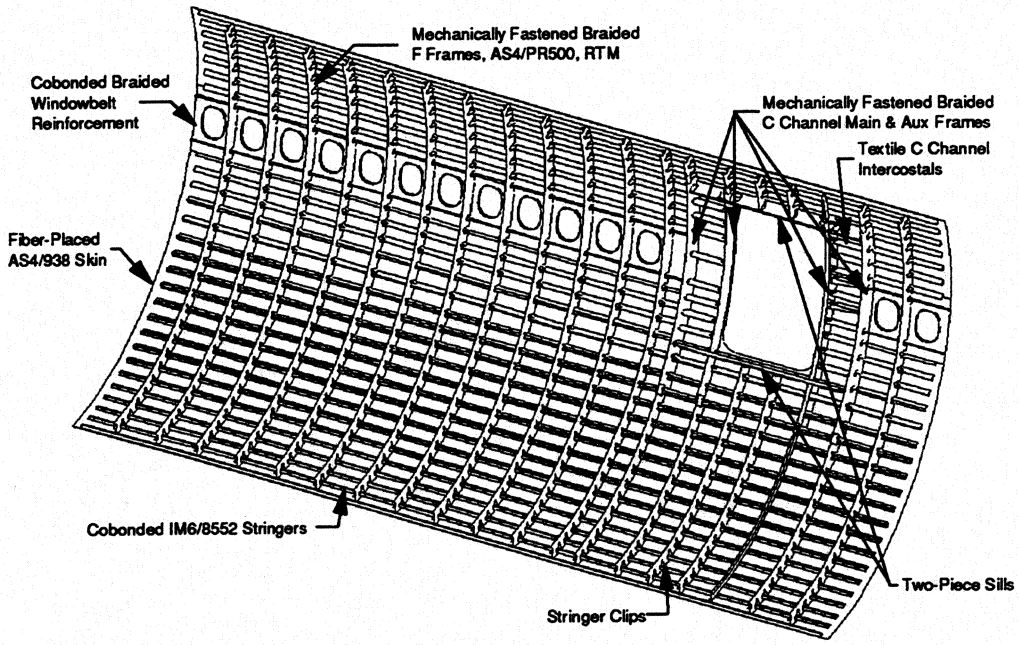

Figure 5-1. Skin-Stringer-Frame Side Design Concept

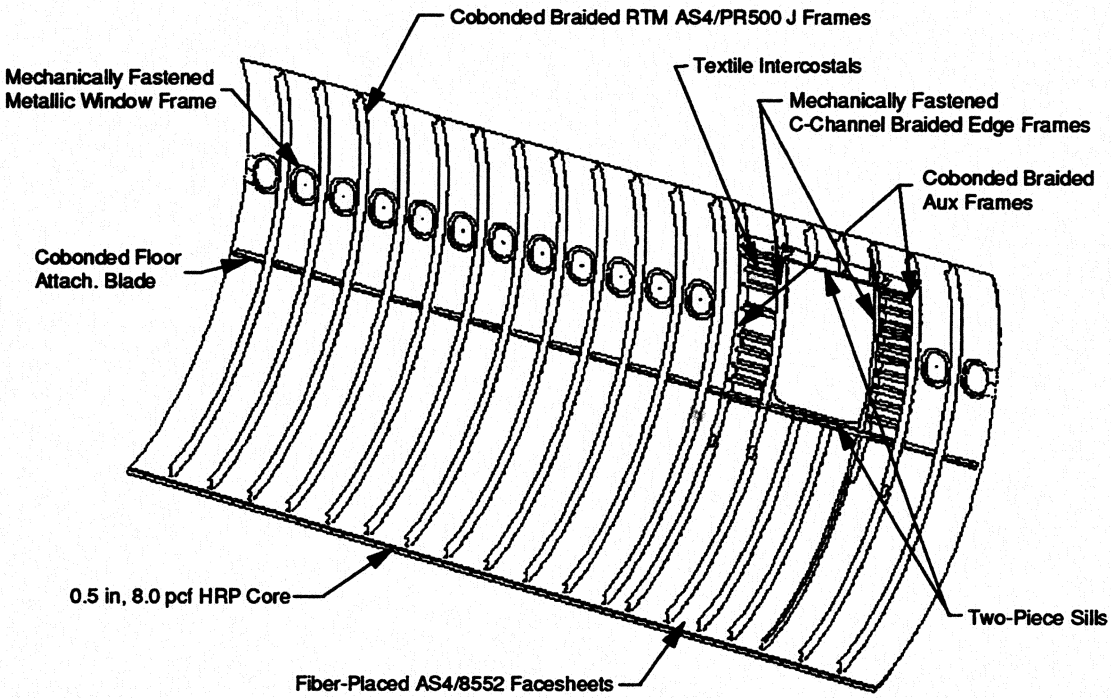

Figure 5-2. Sandwich-Frame Side Design Concept

5.1 Global Evaluation Trade Studies

The trade studies were conducted for two side design configurations: skins with cocured stringers and cobonded frames (Family C), and sandwich with cobonded frames (Family D). Processes, materials, and design variations were combined to determine the configurations offering the greatest cost and weight benefits with a high confidence level for success. Figure 5-3 shows the initial cost and weight values for the two design configurations in comparison to the aluminum baseline.

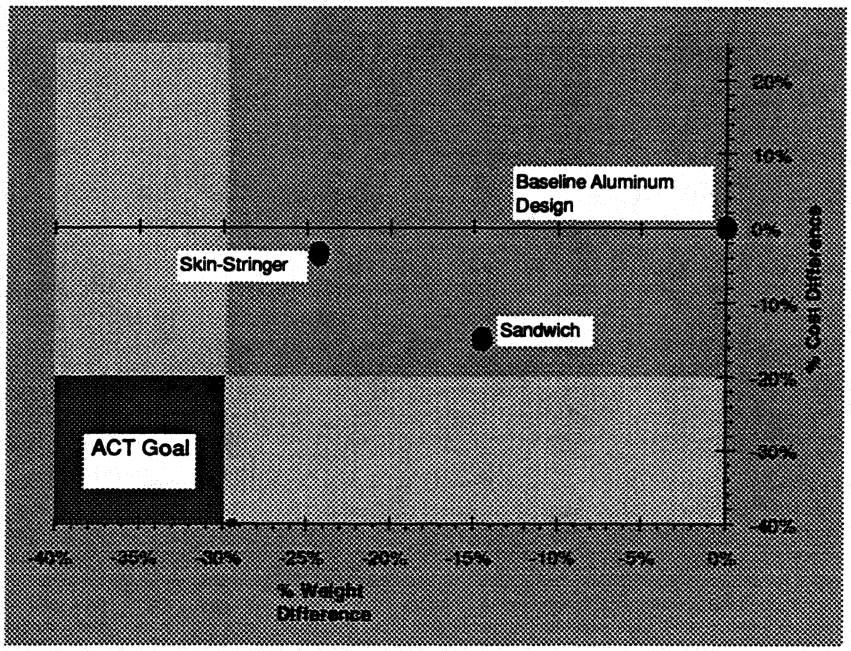

Figure 5-3. Cost/Weight of Composite Sandwich and Skin-Stringer Configurations

To properly assess potential savings of one design over another, two risk assessments were completed. The first addressed potential cost and weight increases if the assumptions for design details, structural performance, and manufacturing producibility could not be met. The second evaluated additional weight and cost savings due to further advancement in the technologies. These risk assessments helped identify which technologies, manufacturing methods, materials, and design details should be pursued for the most cost and weight benefit.

Risk Assessment for Potential Cost and Weight Increases

Risk assessments of the two side configurations are shown in Figures 5-4, Table 5-1, and Figure 5-5. The composite designs are compared to an aluminum design which assumes highly automated manufacturing methods with accurate (non-shimmed) barrel assembly. Figure 5-4 shows the most significant cost and weight impacts if trade study assumptions for manufacturing and design of the composite panels could not be realized. Cost of the two designs could increase 25% if material costs, AFP, and factory variances are not minimized. Another significant cost increase would be the use of titanium fittings if the isolation barriers used with aluminum fittings provided inadequate protection against corrosion. Further analysis shows that both designs would be sensitive to the same cost assumptions, and would therefore yield similar cost increases if those assumptions proved incorrect. Since both potential cost increases were similar, risk assessment for potential cost reductions would better determine the side design configuration to be selected.

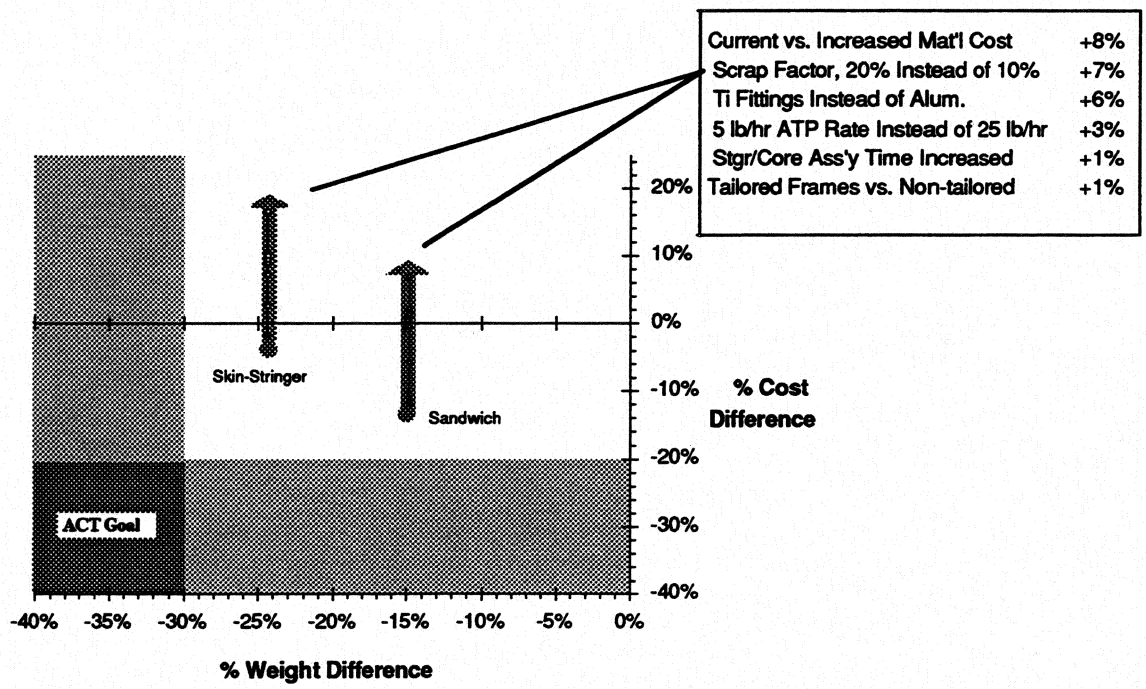

Figure 5-4. Cost and Weight Impact Based on Conservative Assumptions

Risk Assessment for Potential Cost and Weight Reductions

A risk assessment was conducted to understand the potential cost and weight benefits of additional manufacturing technologies, materials, and structural design changes. These changes were rated with probability of success for both manufacturing and structural performance. A probability ranking of 100% indicates that the change would meet the manufacturing and structural performance criteria. The combination of structural and manufacturing probability are shown in Table 5-1. Probabilities were rated based on the available level of design detail analysis and predictions of tolerance control for manufactured details. The impact of these new assumptions was applied to the baseline cost and weight for each design.

Table 5-1. Probabilities of Success for Side Panel Design Improvements

	Design Enhancement	Probability of Success		
		Manufacturing Feasibility	Structural Performance	Combined
Skin-Stringer	Braided RTM window frame	90%	90%	81%
	Pultruded stringers	60%	90%	54%
	Increased stringer spacing	100%	95%	95%
	Pocketed skin	100%	70%	70%
	Improved assembly			
	Liquid shims only	80%	100%	80%
	No gap gaging or shimming	30%	100%	30%
	Hat stringers	80%	100%	80%
Sandwich	Braided RTM window frame	90%	90%	81%
	Korex honeycomb core	100%	80%	80%
	Improved core close-outs	60%	70%	42%
	Enhanced panel bond process	50%	90%	45%
	Improved assembly			
	Liquid shims only	70%	100%	70%
	No gap gaging or shimming	30%	100%	30%
	Two-row longitudinal splice	90%	70%	63%
	Reduced minimum gage	100%	60%	60%
	Increased frame spacing	100%	90%	90%
	Eliminate door-stop intercostals	100%	30%	30%

The skin-stringer-frame design could realize an additional 10% cost reduction by stringer design changes, reducing shimming, and reducing skin pad-ups. A 3% cost savings could be gained by using a hat stringer design with minimal weight penalties. If panel tolerance control was maintained through optimal fabrication methods and tooling, elimination of cost associated with custom shims would reduce total cost by 5.6%. If panel tolerance was controlled within the gap allowance such that gap compensation would be accomplished through acceptable assembly preloads, *all* shimming would be eliminated, reducing the total cost by another 5.6% (total reduction of 11.2%). The elimination of shimming would require that fastened interface gap conditions would be less than 0.008". Typically, assembly gaps less than 0.008" can utilize designed pull-up forces for part installation. If pull-up forces were not required, the cost of barrel assembly equipment would be significantly reduced.

The sandwich design had a potential cost savings of 30% with a weight saving of 18%. The majority of these benefits were achieved by increasing the frame spacing from 21" to 42", eliminating shimming, using higher performance core, and reducing laminate plies in the IML or OML skin [33]. If only assumptions that had a probability rating of 70% or greater were achieved, an additional 20% cost and 10% weight savings could still be realized. Based on its greater potential to meet the weight and cost goals of the ACT program (see Figure 5-5), the sandwich side panel configuration was selected for further development.

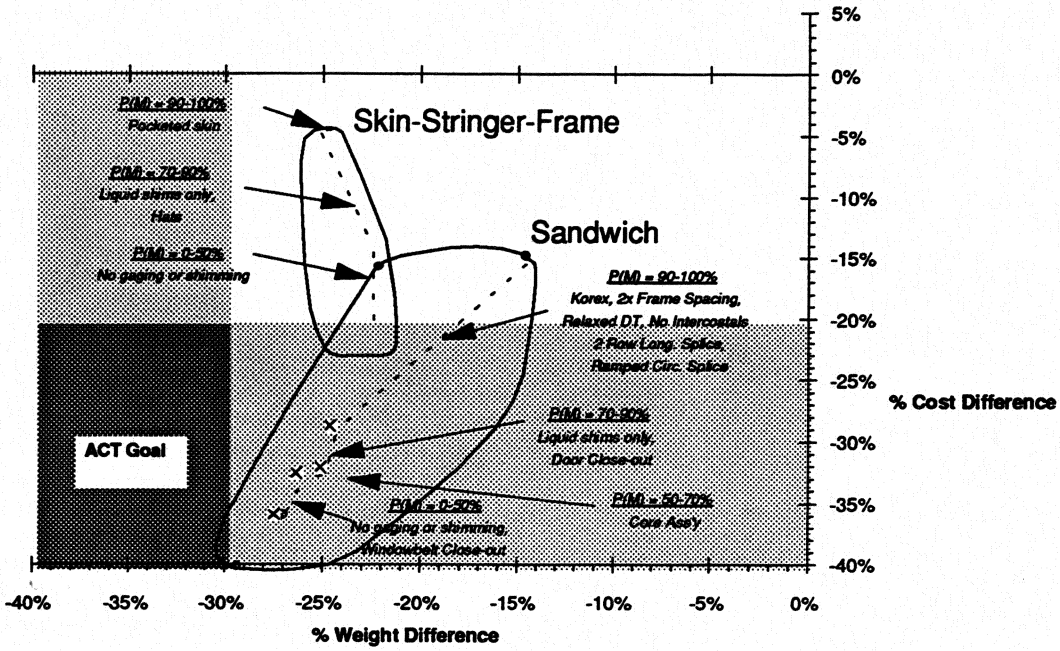

Figure 5-5. Range of Potential Cost and Weight Savings

5.2 Design Updates

The downselected sandwich side panel design was updated where manufacturing costs and structural efficiencies could be improved. Design-constraining structural requirements for the sandwich configuration include stability and damage tolerance under combined loads, ultimate strength of panel splice joints, and ultimate strength of high stress concentration areas around windows and door cutouts [17,30]. The anticipated service environment for fuselage side panels was similar to that described for the crown [3]. Designing the sandwich to a constant gage configuration provides a uniform inner mold line which reduces the number of unique circumferential frames required. Other updates include full-depth panel edge core close-outs similar to those described for the keel panel. A full-depth core close-out at window cutouts also relieves the requirement for a window frame with high out-of-plane bending stiffness, and has the potential for eliminating the frame altogether. The sandwich structure transitioned into a solid laminate at the passenger door which allows mechanical fastening of the door cutout reinforcing structure rather than cobonding. The door cutout area is reinforced with a complicated system of edge frames, auxiliary frames, door sill chords, and intercostals that would impact tooling and panel bond assembly costs.

5.3 Baseline Manufacturing Approach

A factory lay-out, shown in Figure 5-6 represents the major process flow for side panel fabrication and fuselage assembly. This factory does not reflect the amount of rate tooling and equipment required to fabricate all quadrants. A detailed discussion related to process/cost relationships is presented in [31].

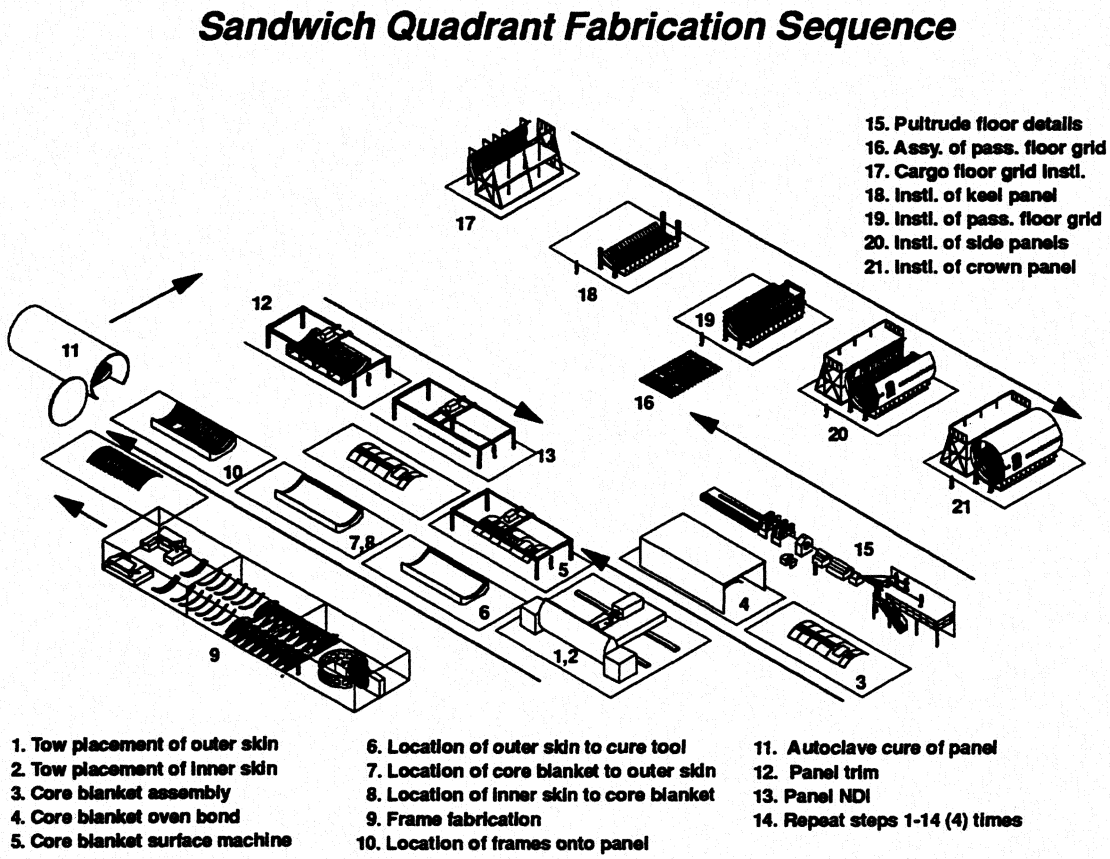

Figure 5-6. Manufacturing Sequence for Sandwich Panel Construction

The textile/RTM circumferential and auxiliary frames are cobonded to the sandwich skins during panel cure. CYTEC's Metalbond 1515-3M (grade 05) film adhesive was selected for cobonding frames and cocuring the facesheets to the core and core close-outs. Fiberglass fabric plies would be locally placed on the outer facesheet in the window belt and at the overwing longeron areas to isolate aluminum elements from the graphite facesheets. Textile intercostals, main door frames, and sills reinforce the passenger door. These elements would be mechanically fastened to the panel bond assembly and spliced to the cobonded fuselage frames (Figure 5-7). Aluminum window frames and overwing longeron extensions would be mechanically fastened to the panel.

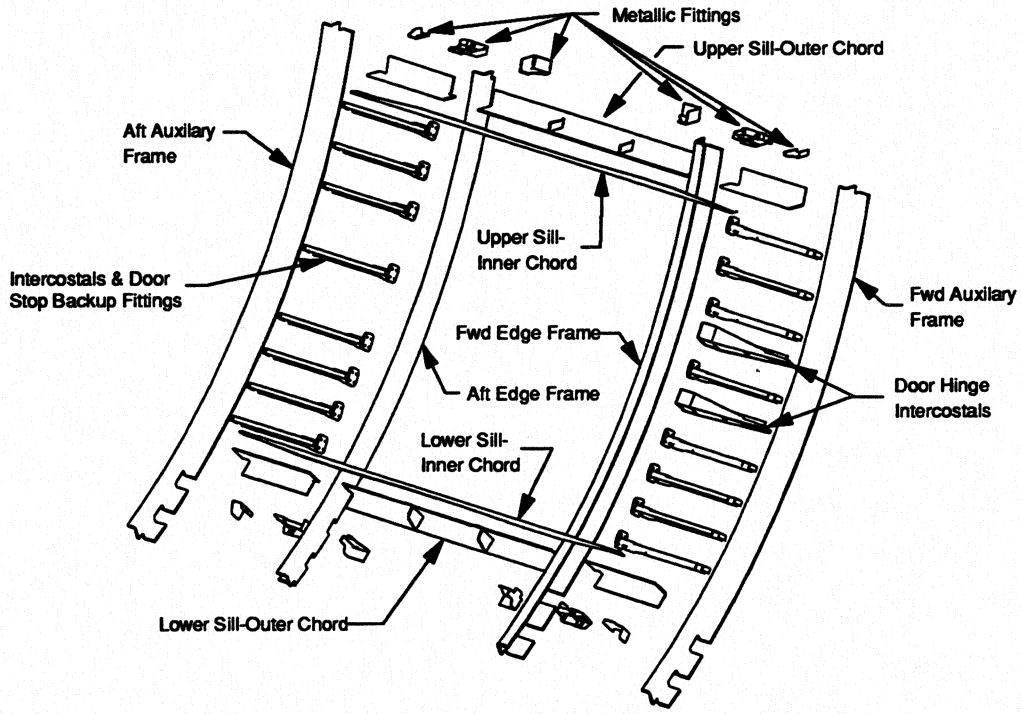

Figure 5-7. Details of Side Quadrant Door Cutout

5.3.1 Skin fabrication

The TCA head, which had the ability to individually control up to 32 tows, was used to add and drop plies accurately for cutout regions. One potential window design configuration required contour placement of the plies where the core ramps down. To minimize rate tooling requirements and material out-time use, the skin was laminated directly on the cure tool as shown in Figure 5-8. This eliminated the cost of winding mandrels, transfer tools, and associated transfer labor. This type of contour required an AFP tow head which has the capability to add and drop individual tows. The outer facesheet is fabricated directly on the OML cure tool, followed by location of the core blanket. The IML skin was laminated directly onto the core blanket followed by a fabric ply on the outer surface to reduce fiber breakout during fastener hole preparation. The baseline tow prepreg material for the AFP skins was Hercules AS4/8552, with a resin content of 35% by weight. Various AFP tow types may be used to improve damage tolerance as discussed in [3]. AFP efficiencies were less than the crown due to cutouts and increased ply tailoring. Discussions on AFP process efficiencies are detailed in Section 6.

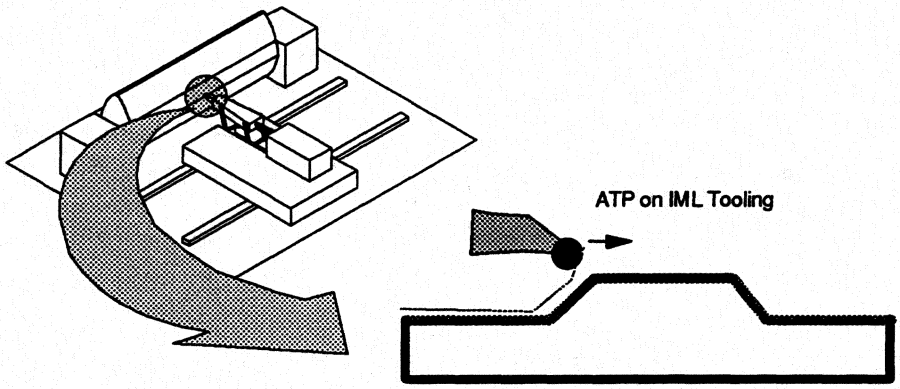

Figure 5-8. Automated Fiber Placement Over IML Tooling Ramps

5.3.2 Circumferential Frames

The side panel incorporates 2-D triaxial braided, resin transfer molded RTM J frames similar to those used in the crown and keel (Sections 3.3.3, 4.3.3). The one-piece fuselage frames are braided/rtm to match the inner skin contour to within ± 0.010" and minimize frame-to-skin interface gaps. AS4/PR500 is the baseline frame material, and was used in all keel and side frame demonstrations. The constant IML radius eliminates the need to control frame movement in the circumferential direction, thus reducing the risk of gaps in the frame to skin interface. The frames are precured and cobonded to the sandwich panel with CYTEK's Metalbond 1515-3M film adhesive with methods similar to those used for the keel. Lockheed designed and developed the side circumferential frames. Two frame design variations including a constant radius frame flange and a contoured flange to follow the window rampdown areas (Figure 5-11). In order to compensate for the increased frame web height, the braid architecture bias angle was changed to ensure full ply coverage. Fiber orientation variations of less than 5° would be required for proper ply thickness. Side fiber-preform architecture design is discussed in more detail in [18,32].

5.3.3 Core Blanket Fabrication

The sandwich core blanket fabrication and stabilization processes used for the side were the same as those described for the keel in Section 4.3. Peel ply was used to stabilize the core blanket for handling and machining. One layer of dry peel ply was placed against the core to reduce the amount of resin bond between the core and peel plies with one layer of wet (preimpregnated) peel ply over the dry to provide a vacuum barrier. As previously stated, the dry layer significantly reduced the amount of effort required to remove the peel ply for subsequent panel assembly. This also lowered the risk of damaging the core. The laminate tailoring of the IML and OML facesheets was compensated for by machining both contours into one side of the core blanket, thus reducing machining set-up and run time while maintaining a constant overall panel thickness.

5.3.4 Panel Edge and Window Close-outs

The side sandwich panel incorporates edge close-outs at the longitudinal and aft circumferential splices with the same general structural requirements as the keel panel. Close-out concepts similar to those pursued for the keel (Section 4.4) were also evaluated for window cut-outs. These help protect the core from the environment and react fastener clamp-up loads. Full-depth core concepts have been identified as baselines for the window cutouts (Figure 5-9). These include braided preforms over a fly-away mandrel made of either dense foam, foam-filled honeycomb, or either material in combination with solid laminate strips at the fastener lines. An optional fabrication approach would use a contoured laminate constructed from fiberglass/epoxy. Such solid close-outs are 1.51 lbs heavier but offer simplicity of construction and greater resistance to bolt clamp-up and moisture ingression. Chamfered core close-outs were investigated and developed by Lockheed under their ACT contracts shown in Figure 5-10. Grade 05 film adhesive was used for bonding all close-outs to the sandwich skins, and foaming adhesive was used for the core/close-out interface.

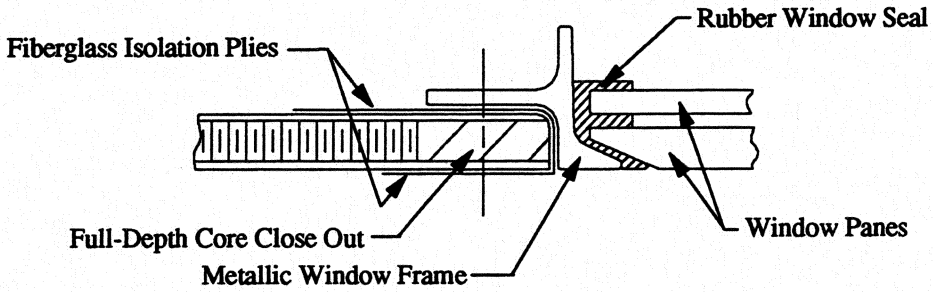

Figure 5-9. Full depth Close-out and Window Frame Design

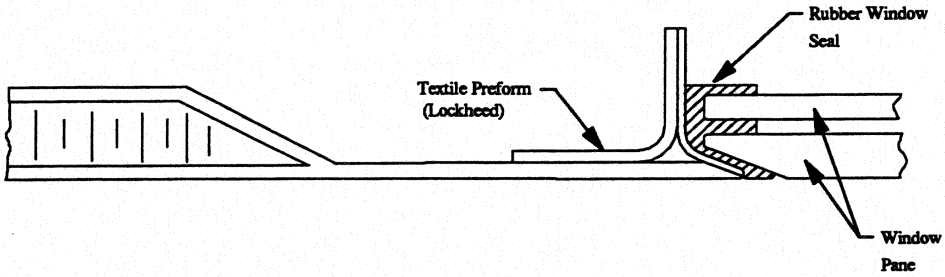

Figure 5-10. Ramped Close-out and Window Frame Design (Lockheed)

Sandwich core close-outs at the lower longitudinal and circumferential splices are similar to those described for the keel panel. The upper longitudinal splice core close-out would also be of the same configuration if a sandwich design concept were adopted for the crown. A chamfered core and laminate edge band would be desired to splice to the current stiffened-skin crown design concept.

5.3.5 Panel Cure Tooling

Two tooling concepts were pursued to determine optimal fabrication methods for minimizing cost and risk: an OML and an IML approach. The current tooling method is an OML tooling approach, similar to that of the keel, which uses a hard OML cure tool with flexible IML caul sheets. This approach is suited for parts which must maintain aero-smoothness requirements and have constant radii frames.

An alternative approach is to use a hard IML tool with a semi-flexible OML caul. This method requires frame location pockets in the hard IML cure tool, which are designed with tapers at the edge to match the taper in the edge of the frame flange. One advantage of the IML approach is the reduction of tolerance stacking at the frame-skin interface. Instead, variations in all the elements are forced to the OML surface during cure, and the facesheets and core blanket are forced to fit to the frame contour (Figure 5-11). Rigidity of the OML caul sheet can be adjusted to suit internal and external quality requirements; however, the OML variation needs further evaluation to determine the aerodynamic impacts. Although the IML approach has more complexity (i.e., cost) in the tool, it eliminates the need for a prepleated cure bag and frame locational jig, and reducing recurring labor by simplify the process of panel bond assembly.

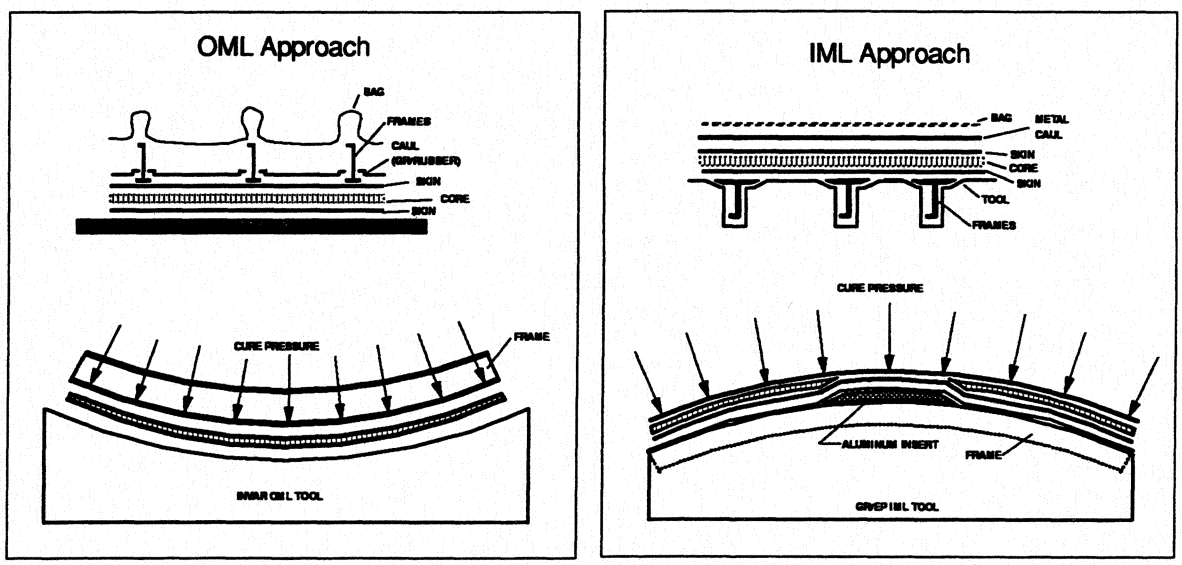

Figure 5-11. Tolerance Build-up of IML and OML Tooling

The contour of both OML and IML cure tools require contour tolerance control of ±0.010". Although the tools can be machined to these tight tolerances, maintenance of the tool contour during the various manufacturing methods requires proper substructure stiffness and special handling equipment. An initial tool design showed that the IML tool height would be approximately five feet high compared to nine feet for an OML tool. The reduced height of an IML cure tool can accommodate access for touch labor required for panel assembly. Additional tooling with added labor risks would be required for the OML approach.

5.3.6 Panel Assembly and Cure

Panel assembly and associated preparation methods used for the keel panel apply directly to the side panel assembly. Assembly of the skins, core blanket, precured frames, and close-out details require accurate placement to ensure tolerance requirements are not exceeded. This helps to maintain frame-skin bond integrity as discussed in Section 4.1.1. The skin and core contours must be accurately located relative to each other to maintain constant gage thickness. Therefore, an indexing system with reference optical targets needs to be designed into the winding, transfer, and OML cure tools.

The cure cycle shown in Figure 5-12 was designed for the Hercules AS4/8552 thermoset towpreg system. Cure processing parameters developed for keel were used for both the OML and IML tooling approaches evaluated in side panel fabrication demonstrations.

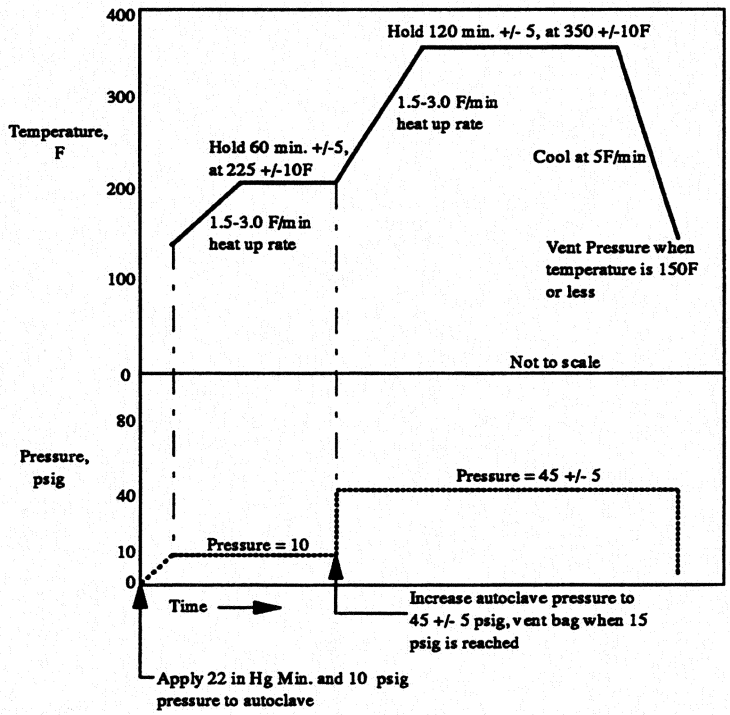

Figure 5-12. Standard Autoclave Cure Cycle for Hercules AS4/8552

After cure, the window and door cutouts are trimmed before attaching door and window reinforcements.

5.3.7 Window Belt Assembly

A mechanically fastened aluminum forging was selected for the baseline sandwich (design Family D) window frame (this frame design was not optimized for use on a composite sandwich panel). Fiberglass isolation barriers were cocured to the skin to provide corrosion protection. A solid full-depth core close-out design was used to resist fastener clamp-up loads and add local stiffness (Figure 5-9). The window frame configuration for the local core rampdown designs was previously shown in Figure 5-10.

5.3.8 Door Reinforcement Elements

The door sill chords, intercostals, and edge frames would be precured details that are fastened to the cobonded auxiliary frames, chords, and skin panels (Figure 5-7). The edge frame design and fabrication processes were developed by Northrop-Grumman Corporation under subcontract to Boeing using PR500 and 977-2 resin systems. Preforms were developed with pockets in the web and flange joggles concurrent with gage reduction [37] (Appendix C). Braiding and RTM processing techniques similar to those previously discussed for circumferential frames would be used for auxiliary frame fabrication. The passenger door sills would be fabricated from drape-formed IM6/8552 tape and plain weave fabric. Since the intercostals were of constant cross-section, a pultrusion process is considered the most cost effective. Door stop fittings would use machined "T" sections. These sections would be pultruded from tape and fabric preforms with material system properties similar to AS4/3501-6.

5.3.9 Fabrication of Floor Beams and Stanchions

Passenger floor beams and stanchions would be pultruded with AS4/epoxy with fabric plies on the outer surface to prevent fiber breakout during machining operations. Alternative processes such as drape forming were considered but did not offer comparable cost benefits. Detail part tolerances of ±0.010" would be required to provide for barrel assembly without shims. The installation of passenger floor beams and stanchions is detailed in the discussion of barrel assembly in Section 6.

5.4 Manufacturing Issues

Manufacturing issues for sandwich side panels are similar to those for the crown and keel panels, and are outlined in Table 5-2. Additional issues, due to window and door cutout reinforcement elements, were identified. Issues that were significantly different from the keel include AFP over ramped core and cutouts, window and door cutouts and reinforcements, and use of Korex core.

Table 5-2. Honeycomb Sandwich Side Panel Manufacturing Issues

Technology	Issue
AUTOMATED FIBER PLACEMENT (Skins)	• Process efficiencies-need to exceed 25 lbs/hr with less than 10% scrap rate. • Need to determine effects of defects or out-of-tolerance control effects (i.e., lap/gap, fiber waviness, add/drop accuracy). • AFP tooling for tailored skins, cutouts and panel edges needs verification. • Develop process for fiber placement on contoured cores without core damage risks.
AFP TOW MATERIAL	• Tack and dimensional control of the tow material form is critical for process efficiencies • Large panel fabrication may require significant material out-time life capabilities. Baseline Hercules 8552 system is limited to 20 days handling life.
CORE BLANKET FABRICATION	• Tolerance control of core thickness is critical for cobonding frames to sandwich. Core machining accuracy to within .010" is required. • Develop and verify methods for one-sided core machining. • Scale-up methods for splicing and stabilization of multiple core pieces and precured details to produce full-size core blankets needs to be demonstrated. • Core machining process for HRP and KOREX must provide suitable bonding surfaces and prevent moisture migration. • Improved fabrication process control of advanced honeycomb materials is required. Methods and tooling for fabricating full-size core blankets which includes locational control of cutouts needs to be verified. • Handling tooling for location and placement of core blanket.
RESIN TRANSFER MOLDING (Frames, Splices, Close outs)	• Develop process for RTM with system similar to Shell 1895 resin system. • Process control / SPC methods are not currently used for part quality. • Reduce frame flange surface preparation work for subsequent cobonding with peel ply use in RTM process. • Process and tooling flexibility for tailored frames has not been proven (i.e., design thickness variation) • Inspection standards and methods have not been established for precured textile primary structure. • Verification of tolerance control of frame flange contour. • Design for frame flange spring in/out and frame radius control (121.3" ±0.010"). • Improved manufacturing methods to reduce cost are needed for window and door precured elements.
PULTRUSION (Passenger Door Elements)	• Resin system suitable for structural requirements and rapid cure processing requirements may require additional development. • Fiber preform architecture's need to be defined and optimized for the pultrusion process. • Process monitoring of resin cure is required for part quality control.

PANEL BOND ASSEMBLY	• The methods to transfer and locate large facesheets without induced anomalies (i.e., wrinkling, skin thickness variations due to AFP lay-up patterns). • Methods to control or compensate for tolerance stacking at critical locations (i.e., frame and bond regions) Optimal panel assembly methods and supportive tooling required for side details needs to be defined and verified. • Tolerance control methods for core blanket location to ensure accurate position of cutouts and panel edges is required to reduce shimming during barrel assembly. • Dimensional tolerance criteria for facesheets, core, and frames must be defined to optimize individual processes to reduce barrel assembly risks due to tolerance stacking problems. • Panel warpage from increased panel size from Phase A/B needs to be evaluated for compensation through process / tool concept developments. • Cure cycle process control needs to be developed to minimize warpage and provide uniform cure. • Reliable surface preparation for cobonded elements is required for structural performance.
TOOLING	• OML and IML tooling material selection to minimize panel shrinkage and control frame movement. • Develop tooling to hold ±0.010" contour tolerance. • Develop AFP winding mandrel / rotisserie system for panel assembly. • Tool weight and cost. • Design for uniform heat transfer. • Tooling flexibility to compensate for design changes will require verification through multiple panel demonstrations. • Production durability and cost benefit of the reusable cure bag system needs to be verified.

5.5 Side Process / Tooling Developments

As mentioned previously, a sandwich side panel design was selected over a skin/stringer configuration due to its greater potential for cost/weight reductions. These reductions were pursued through process development and production of manufacturing demonstration hardware. Although the OML cure tooling approach was considered the baseline configuration, the IML tooling approach offers potential benefits for reduced tooling and improved frame-to-skin bondline integrity. IML tooling development activities and results are discussed in more detail in the [32]. Tooling trials and subscale demonstration panels (7' x 10') were used to verify the risks and costs for OML and IML tooling approaches. These panels addressed the following issues: (1) core blanket material and processing, (2) efficiency of the AFP process with contoured core, and (3) panel tolerance control by cure cycle and tooling optimization and process control. Hardware demonstrations fabricated during side panel development are illustrated in Figure 5-13. Boeing was responsible for developing OML tooling methods for full-depth and locally ramped window-belt design configurations. The continuous rampdown design and a local rampdown design were pursued by Lockheed with the IML tooling approach.

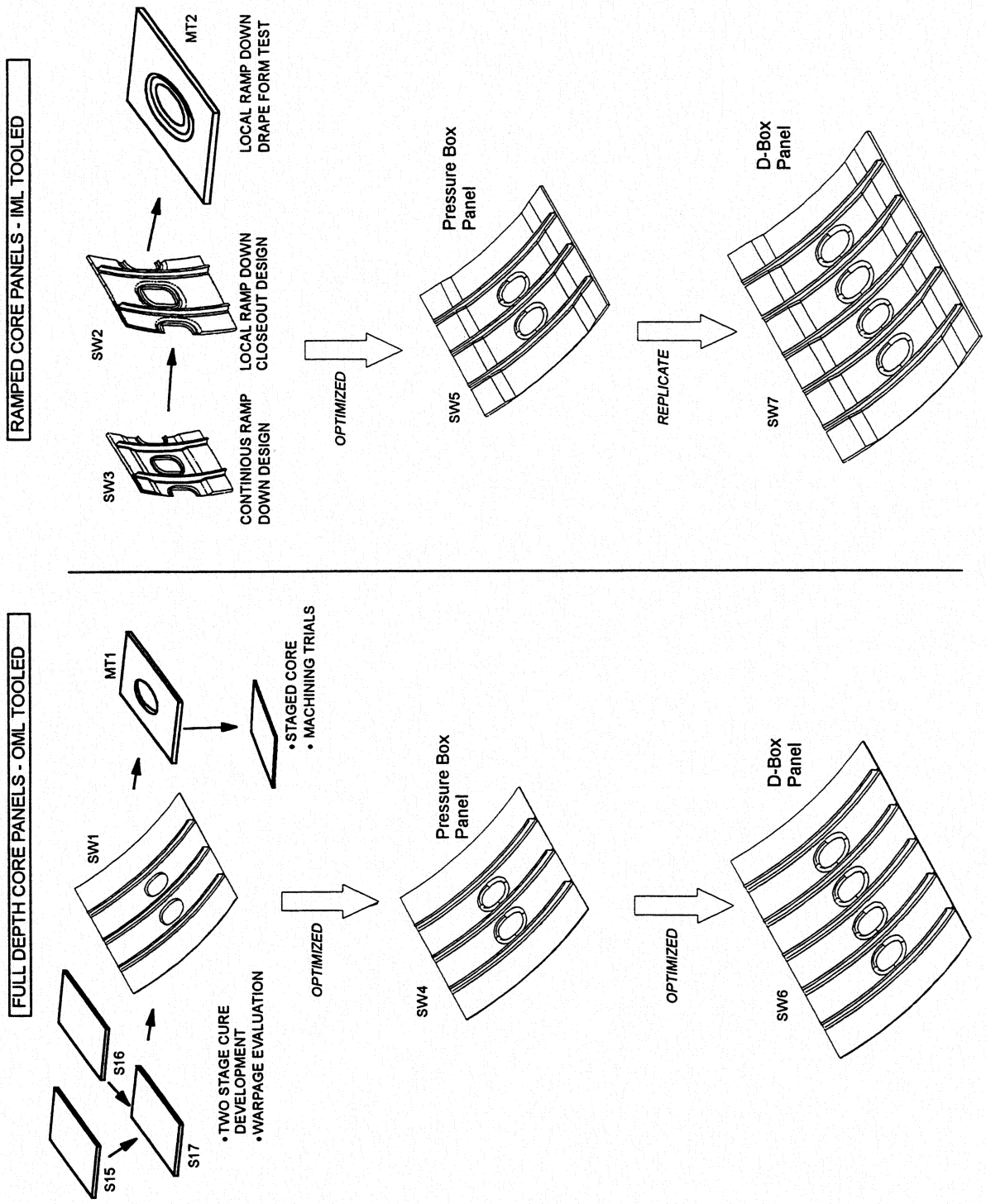

Figure 5-13. Side Panel Hardware Demonstrations

5.5.1 IML and OML Tooling Concepts

Manufacturing evaluations of the various side panel configurations indicated the feasibility for producing the continuous rampdown design required an IML tooling approach. This was because an OML tooling approach would generate pressure on the core blanket, forcing the tapered core regions away from the frame contour as shown in Figure 5-11. The IML tool allows any mismatch at this area to be consolidated under autoclave pressure. The IML tool also eliminates the possibility of core crush since the chamfered edge of the core is no longer directly exposed to autoclave pressure.

The panel assembly and associated tooling for the IML and OML approaches are outlined below. Significant variations between the two approaches include reduced tooling and labor for the IML approach, with a higher level of confidence of frame-to-skin bond quality. The OML approach is not dependent on frame spacing or sandwich thickness and therefore is more flexible to accommodate design changes. Also, OML surface variation is reduced, depending only on tool contour. Evaluation of cost and risk benefits of the two tooling approaches are evident when comparing the number and cost of the procedure steps shown below in Figure 5-14. Differences in procedures and tooling for the two approaches are highlighted.

Major OML Panel Assembly Procedure

1) AFP of facesheets into winding mandrel
2) **Transfer of OML skin onto cure tool**
3) Location of adhesive ply
4) Location of core blanket
5) AFP IML skin onto winding mandrel
6) **Transfer of IML facesheets to cure tool**
7) Location of close-outs and frames
8) Location of **individual** IML flexible tools
9) Application of cure bag

Major IML Panel Assembly Procedure

1) Location of frames into IML tool
2) AFP of facesheets onto IML tool
3) Location of adhesive onto IML
4) Location of core onto IML facesheets
5) AFP of OML facesheets onto core
6) Location of one piece OML flexible caul
7) Application of cure bag

OML Approach: Major Tooling

1) AFP winding mandrel
2) **Transfer tool**
3) **OML cure Tool**
4) **Individual IML flexible tooling**
5) **Contoured cure bag**

IML Approach : Major Tooling

1) IML / winding tool
2) One piece flexible OML caul
3) Simple cure bag

Figure 5-14. Panel Assembly and Tooling for OML and IML Approaches

5.5.2 Ramped Core Sandwich Design Manufacturing Development

In addition to the baseline full-depth window close-out design described in Section 5.4, two ramped-core window close-out configurations were developed to evaluate appropriate tooling requirements. These designs were (1) a continuous core chamfer for the full length of the panel and (2) a locally chamfered core around each individual window as previously shown in Figure 5-13. The local ramp down design requires the IML laminate to follow a compound contour. This would limit the AFP band width to no more than 2". A width reduction from 5" to 2" would significantly reduce process efficiency. In addition, the risk of porosity in concave areas of the contour increases due to limitations of the AFP roller radius. To minimize this risk, software programs must be constructed to ensure that the AFP head is normal to the part surface as illustrated in Figure 5-15 [18]. Maintaining a normal condition slows the machine since additional axis rotations are required. An alternative method to contour the laminate without loss of AFP efficiency could be accomplished by constructing the IML skin without contour, followed by a draping process to force the laminate into contour, adding an associated risk of wrinkling or bridging the fibers.

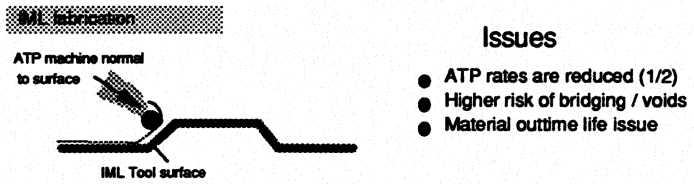

Figure 5-15. AFP Over Ramped Core with Head Normal to the Surface

An alternative lay-up process for AFP over ramped core was demonstrated using AFP and the add/drop capability of the head as shown in Figure 5-16. The facesheet would be laid up without the ramp contour, but including cut tows in preferred areas. A secondary process of draping the skin into the recessed ramped core areas was accomplished by ply slippage during application of heat and vacuum. The cut tows allow the plies to slip relative to one another during the draping process, eliminating wrinkles that would normally occur with continuous plies. Cut location and frequency was evaluated in an effort to minimize structural degradation. This method would improve panel lamination time by using higher AFP rates for non-contoured laminates. The increase of AFP efficiency would also minimize the risk of extending beyond the material outtime limitations. Although this process was demonstrated for an OML tooling approach, application to an IML tooling approach should be straightforward.

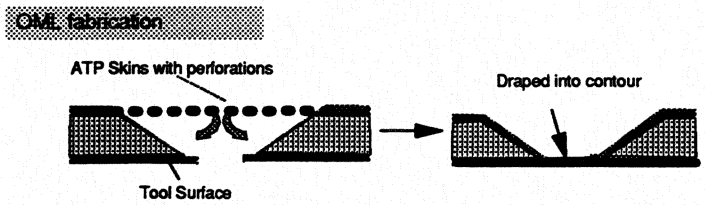

Figure 5-16. OML Tooling Approach for Local Rampdown Design

Figure 5-17 shows the locally ramped concept fabricated using an OML tooling approach. Several arrangements of tow cuts were evaluated in an effort to reduce laminate fiber distortion. Typical ply wrinkles, which occurred at 45 degrees at the window corners were eliminated by selective ply cuts to all orientation plies in the window cutout region (Figure 5-19). Laminates similar to the side panel configuration were draped over 4.5 pcf Korex core and cured. X-ray and TTU inspection across the panel revealed no bridging or porosity. The panel was sectioned and photomicrographed, as shown in Figure 5-18. Fabric and adhesive wrinkles could only be eliminated with manual manipulation which also increased the labor costs.

The continuous rampdown design (selected by Lockheed for development) does not have compound contour in the ramp region, eliminating the risks of laminate wrinkles and the need for manual application of adhesive and fabric plies. This process of cutting and drape forming would be better suited to the continuos ramp design over the local ramp design, but may not increase efficiency enough to justify its use.

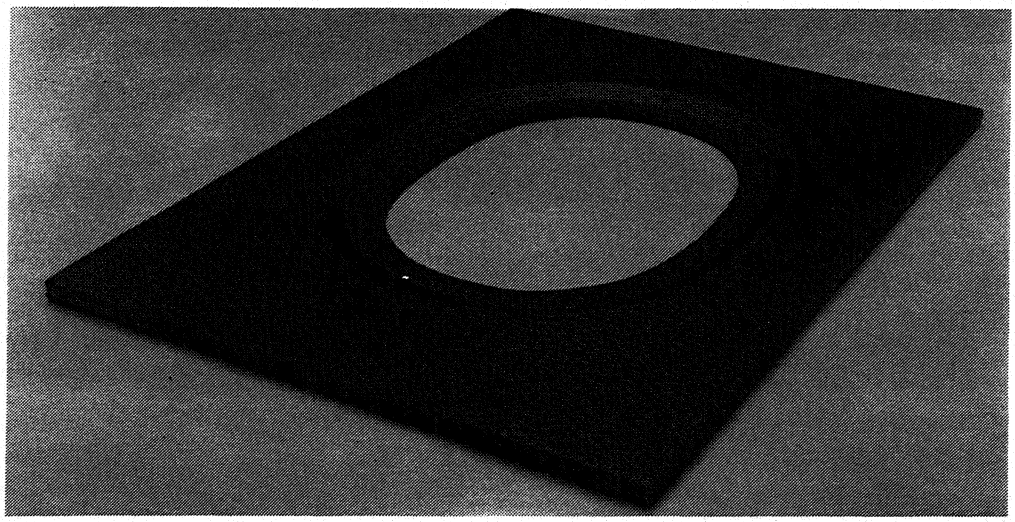

Figure 5-17. Photograph of Locally Ramped Window-belt Drape Test

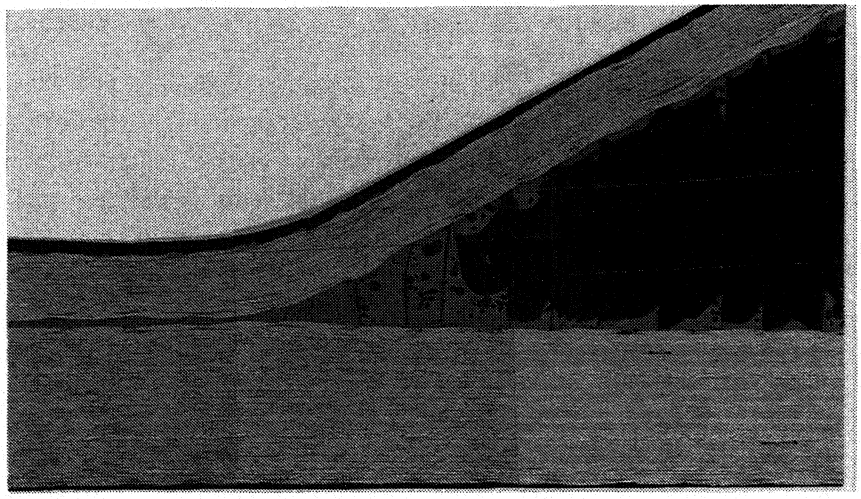

Figure 5-18. Photomicrograph of Locally Ramped Window-belt Drape Test

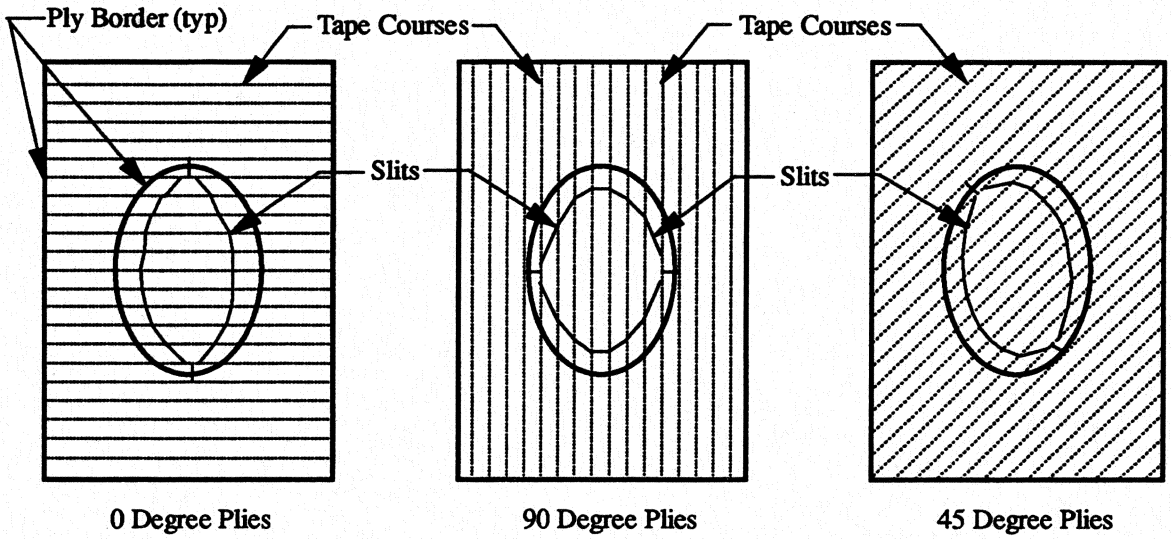

Figure 5-19. Ply Cutting Diagram for Drape Process

5.5.3 Panel Assembly

The use of a full-size core blanket required stabilization methods for core machining, handling, and control of local core details during and after cure. Several methods were pursued to meet these criteria. One of the methods pursued, a two-stage cure cycle, was such that one of the skins was bonded to the core blanket followed by core contour machining. The other laminate skin was then located, with a subsequent final cure. This bonding process would require a low pressure and temperature to prevent full cure of the laminate. This technique was pursued to evaluate the potential benefits by indirectly increasing the out-time life of the skin material by staging the resin to a point at which further resin advancement at room temperature is prevented. Another advantage of this process is its ability to better compensate for skin thickness variations since the core gage machining operation is done with the attached skin. One of the major risks of this process is the potential of induced panel warpage since chemical shrinkage of the IML and OML skin will occur at different times during cure. This will result in a varying internal stress distribution.

Subscale demonstrations were used to evaluate process parameters and manufacturing risks for two-stage cure cycles. Three 46"x 48" flat test parts were fabricated to demonstrate the effects of the double autoclave cure cycle on sandwich panels with Hercules AS4/8552 facesheets. Variations in lay-up orientations and process temperatures were used to characterize the degree of cure required without inducing panel warpage. Tests results as shown in Table 5-3 indicate warpage was present in each of the three panels. TTU results showed no areas of unacceptable porosity. The most significant effect on the warpage was the initial staging temperature. The amount of warpage induced by either the 250°F or 350°F stage cure was considered unsuitable, so a 200°F stage cure process was evaluated. Outtime studies were performed to determine if further resin advancement would occur under these low temperature staging conditions and is discussed in Section 5.5.4. The panels were also machined to ensure that the lower temperature stage process provided a suitable core to skin bond.

Table 5-3. Two-Stage Cure Test Panel Fabrication and Results

Panel	Lay-up	Cure Cycles	Panel Flatness (after cure)
S15	Non-symmetric face sheets OML: [0-90/-45/+45/0/90/+45/-45/0-90] IML: [0-90/+45/-45/0/90/-45/+45/0-90]	1) 250°F 45 psi *(OML facesheet to core bond* 2) 350° F, 45 psi *(IML to core bond)*	contour varied by ± 0.09" over the part surface
S16	Symmetric face sheets OML: [0-90/-45/+45/0/90/+45/-45/0-90] IML: [0-90/-45/+45/0/90/+45/-45/0-90]	1) 350° F, 45 psi 2) 350° F, 45 psi	contour varied by ± 0.27" over the part surface
S17	Symmetric face sheets OML: [0-90/+45/0/-45/90/-45/0/+45/0-90] IML: [0-90/-45/+45/0/90/+45/-45/0-90]	1) 250° F, 45 psi 2) 350° F, 45 psi	contour varied by ± 0.11" over the part surface
Tool	-	-	contour varied by ± 0.03" over the lay-up surface

Korex honeycomb structure is composed of aramid fiber reinforced with phenolic material in which the phenolic resin is impregnated through the thickness. This is unlike Nomex material where the para-aramid paper is coated with phenolic resin. This difference in fiber impacts machining efficiency and cut-surface quality for subsequent bonding to skin. Issues regarding Korex machining parameters and debris, vacuum integrity of a staged skin, and core surface preparation for suitable bonds were addressed. Manufacturing demonstrations used Korex honeycomb core staged to Hercules AS4/8552 facesheets at 200°F for 60 minutes. High speed routing with a variety of feeds, speeds, and cutter designs indicated that a valve stem cutter at 10,000 RPM provided the best surface quality. The core remained fixed to the facesheet during the machining process and no disbonds were observed.

The quality of the core surface bonded to the laminate skin may influence the resistance to moisture ingression through the core-to-skin interface. The surface quality varies with preparation methods ranging from machining to hand sanding. Hand sanding is required for discontinuities at spliced details or damage repair. The various types of surface preparation were evaluated to determine the degree of impact on moisture ingression resistance. Figure 5-20 shows photomicrographs of 4.5 pcf Korex core, machined with three different types of cutters. The figure also shows one Nomex core piece for comparison.

In order to evaluate the varying types of surfaces to be bonded, a test matrix was developed with different blocks of core and different machining methods, all using CYTEC's Metlbond 1515-3M adhesive. The 6" x 6" panels were tested for permeability at ambient conditions using air pressurized to 8 psi as the fluid media. A flow meter with the capability to detect 1 ml/minute was used to measure the air flow. No air flow could be detected through the core in any of the test panels. The impact of core surface quality on structural properties needs further evaluation.

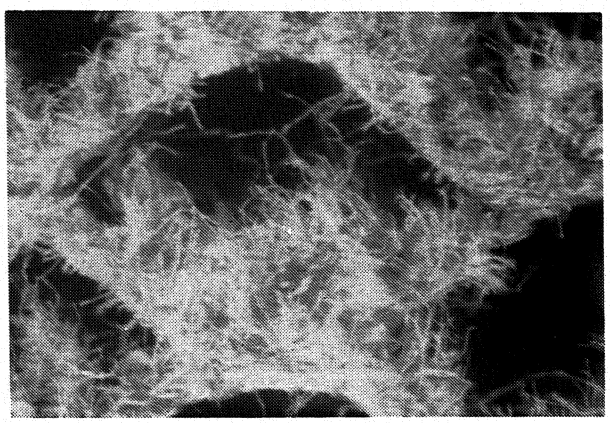

Abrasive Wheel, Korex

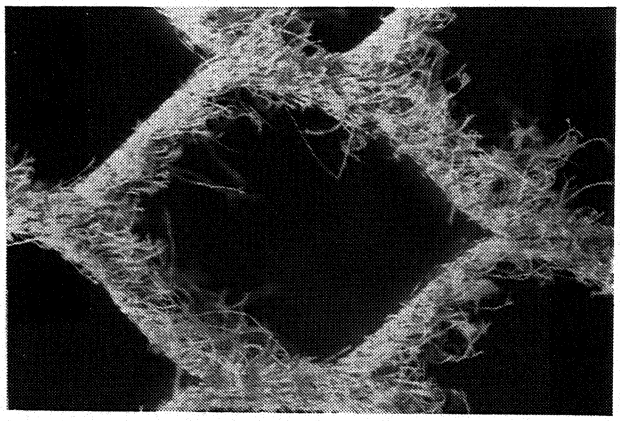

Band saw, Korex

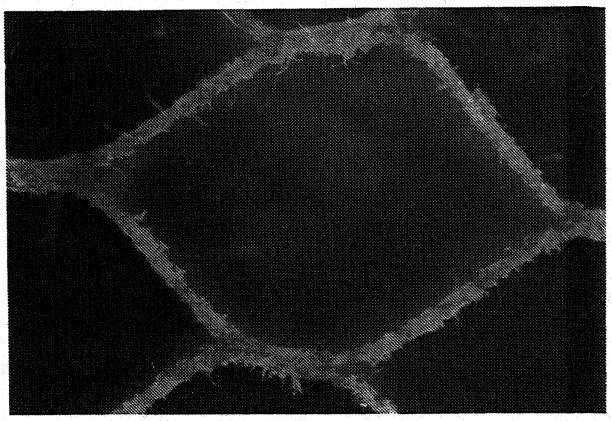

Mill, Korex

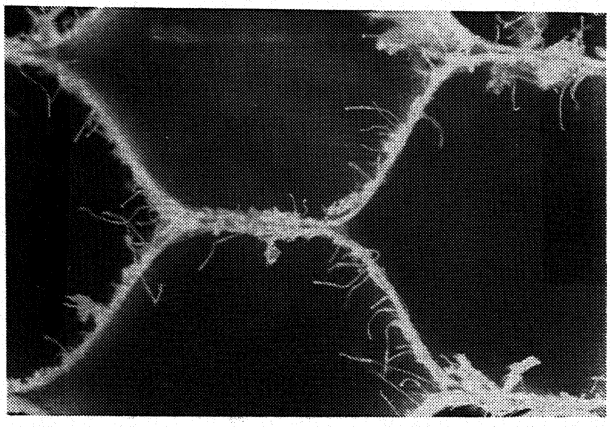

Band saw, Nomex

Figure 5-20. Korex Core Surface Finish Comparisons

5.5.4 Cure Cycle Process

Based on cured panel warpage measurements and permeability tests, following core machining, the two-stage cure process which started with an initial stage at 200°F was selected for further study. The two-stage process was further evaluated to ensure that the quality of the facesheets was not jeopardized. Additional demonstrations were conducted to verify that the facesheets were completely consolidated during staging. Tests using Hercules ATL grade AS4/8552 material were staged with either 10 psi pressure with full (25" Hg) vacuum, or full vacuum only. After the initial 200°F stage cure, out-time was accumulated at room temperature for up to 28 days, followed by the second full cure cycle. Photomicrographs shown in Figure 5-22 (following pages) show a significant increase in void content after 21 days, indicating resin advancement is still progressing after the 200°F stage operation. Typical prepreg outtime capability of more than 30 days is required for factory flow conditions to ensure adequate part quality.

The process of staging the skin to the core must be developed such that the skin is fully consolidated (the condition where the uncured laminate thickness is the same as cured laminate thickness) before final cure at 45 psi. The skin must be fully consolidated to prevent thickness reduction after core gage machining. Laminate thicknesses resulting from different pressure levels during the initial 200°F staging are shown in Figure 5-21. Just applying vacuum during staging debulked the skin to the same thickness as achieved with positive pressure staging and autoclave cure.

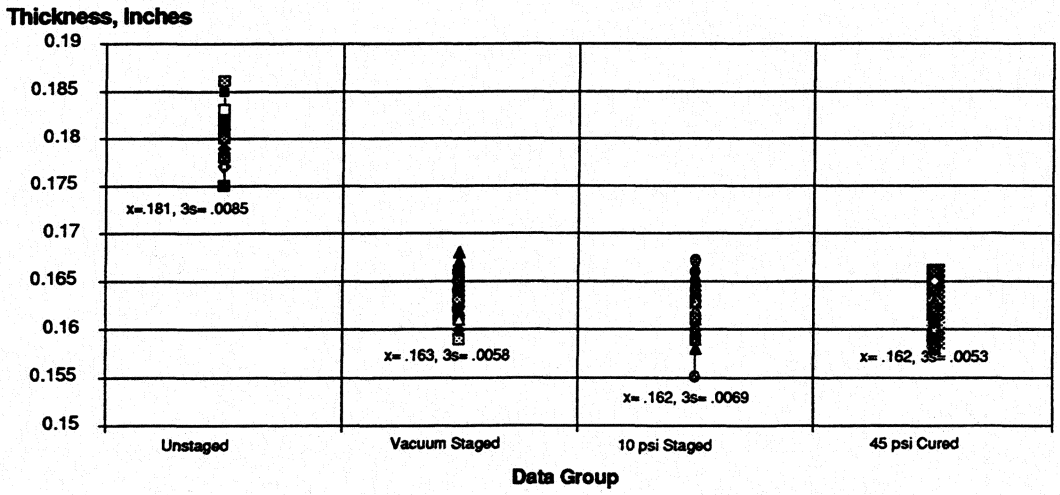

Figure 5-21. Laminate Thickness Results From Staged AS4/8552

Development of the two-stage cure cycle proved to be suitable for stabilizing the core for machining, handling, and cure. However, results of the demonstrations showed that the reduced outtime and added processing costs were more significant than the core stabilization benefits. Therefore, a normal one-stage cure cycle was pursued for the remaining OML subscale hardware demonstrations. The two-stage process was required for the continuous ramp design with the IML tooling approach to compact the skin and core to the contoured tool surface [18].

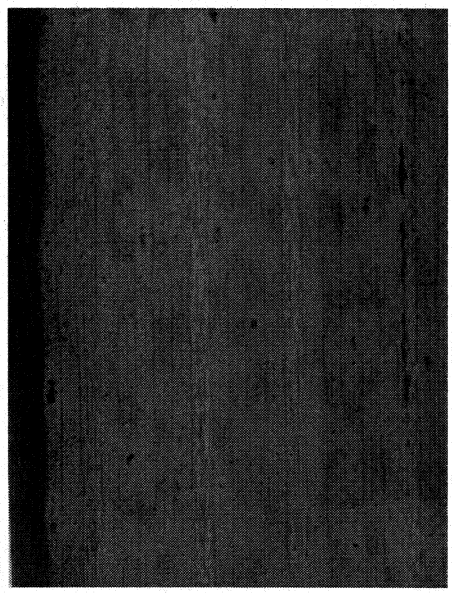

No Staging - 14 days

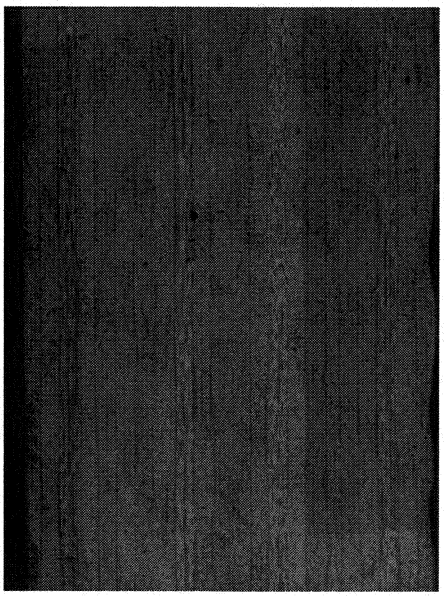

200 F Staged - 7 days

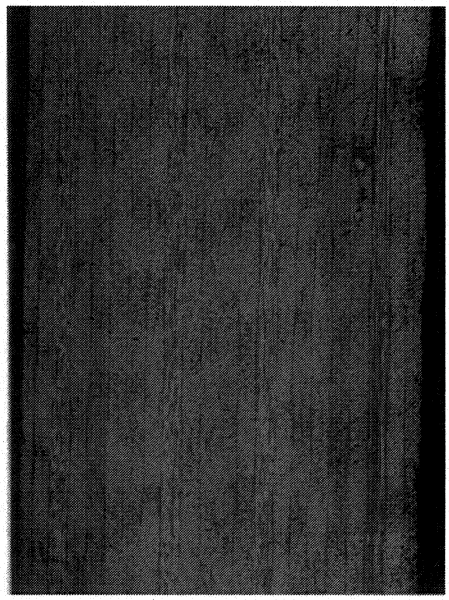

No Staging - 0 days

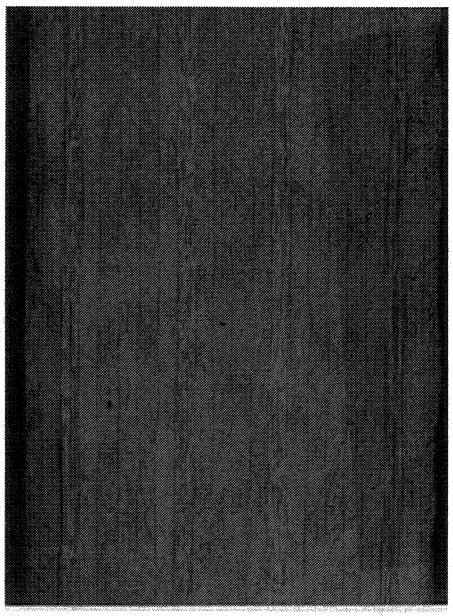

200 F Staged - 0 days

Figure 5-22. Porosity vs. Out-Time of Staged Laminates

200 F Staged with Honeycomb core - 14 days

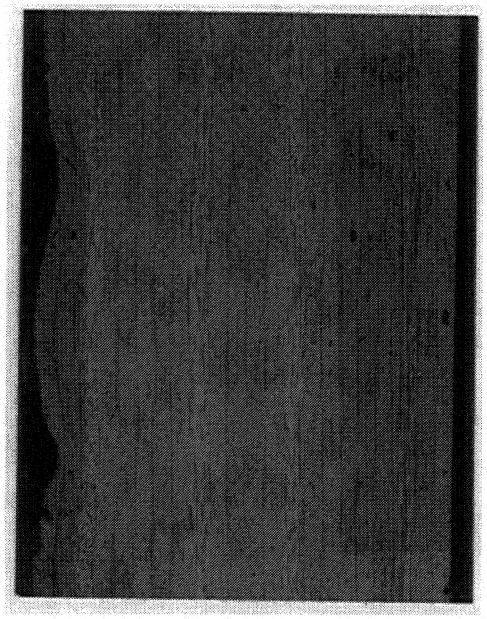

200 F Staged - 28 days

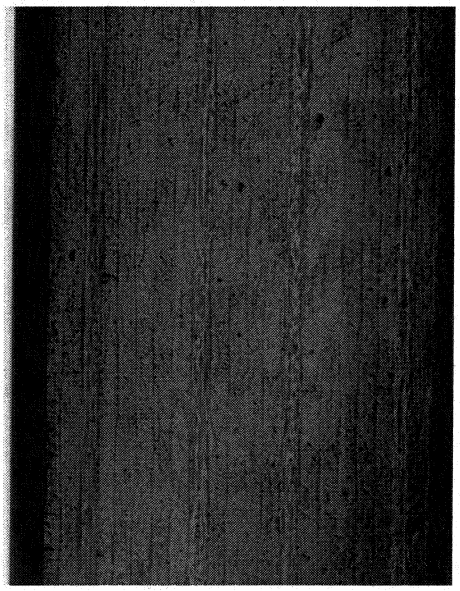

200 F Staged - 14 days

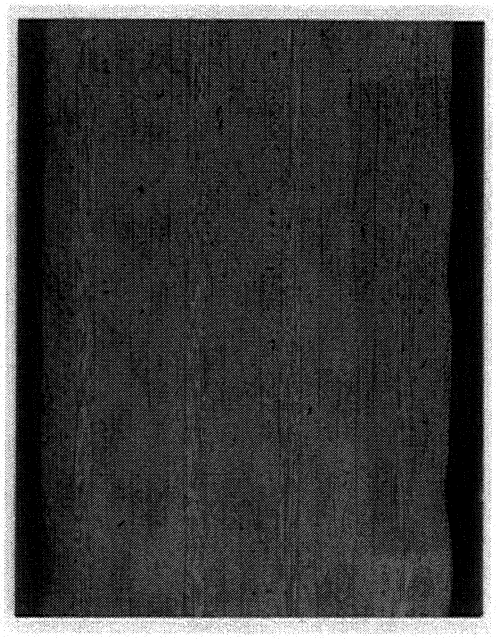

200 F Staged - 21 days

Figure 5-22. Porosity vs. Out-Time of Staged Laminates (continued)

5.6 Large Subcomponent Panel Demonstrations

Window-belt panel fabrication demonstrations were conducted by Boeing and Lockheed. Demonstrations included fabrication of panels up to 7' x 10' in size. These panels were used to determine cost and risk of the two types of window close-outs: continuously ramped, and constant gage. The panels were also used to determine cost and risks associated with the differing IML and OML tooling approaches. Two Boeing 7' x 10' manufacturing demonstration panels (SW4 and SW6) were built to evaluate the OML tooling approach with constant gage window close-outs. The design of the second fabricated panel was optimized, resulting in fewer doubler plies in the facesheets [33]. In addition, two Lockheed panels of similar size (SW5 and SW7) were fabricated with the IML tooling approach, and included a continuous rampdown design for the window-belt. During manufacturing trials, variation in panel contour, frame location, and core detail locations (including window and panel edge close-outs, etc.) was assessed. This was accomplished by taking measurements both during panel assembly and after cure. A comparison of this data was made to optimize tooling and processing conditions.

The 7' x 10' subscale side panels used manufacturing processes similar to those used to fabricate the crown and keel panels. The panels shown previously in Figure 5-13 represent the manufacturing hardware demonstrations pursued by Boeing and Lockheed.

5.6.1 Skin Fabrication

Development efforts for AFP skins permitted evaluation of AFP laminate quality and fiber placement efficiency. The AFP process for the OML tooling approach had been demonstrated previously in the crown and keel development efforts using an aluminum lay-up mandrel with a subsequent transfer to a cure tool. Additional AFP processing development efforts were required for the IML tooling approach and ramped window-belt design. The IML approach required a lightweight AFP mandrel (composite) that also served as a panel assembly and cure tool. These efforts were planned to address the risks of fiber placement on core and on severely contoured surfaces. The crown and keel panels used the AFP band-cut-and-add (BCA) head but, due to ply tailoring for the window cutouts (Figure 5-23), the AFP tow-cut-and-add (TCA) head was used for the side panel. Processing parameters that were expected to impact cured panel dimensional stability and structural performance included: lap and gap conditions between tows and bands, ply orientation, ply edge location, and variation in laminate thickness. For example, crown panel test data suggested that stacking bands increased tension fracture properties [3]. Band lap and gap requirements were the same as the crown criteria of ±0.030" with tow lap and gap criteria of ±0.010 (Figure 5-24). Ply drop-off locations are critical in areas of severe core tapering such as in the window-belt region. Mismatch between the core taper and the dropped plies of more than 0.30" will affect tolerance build-up between the frame and the skin [30,32].

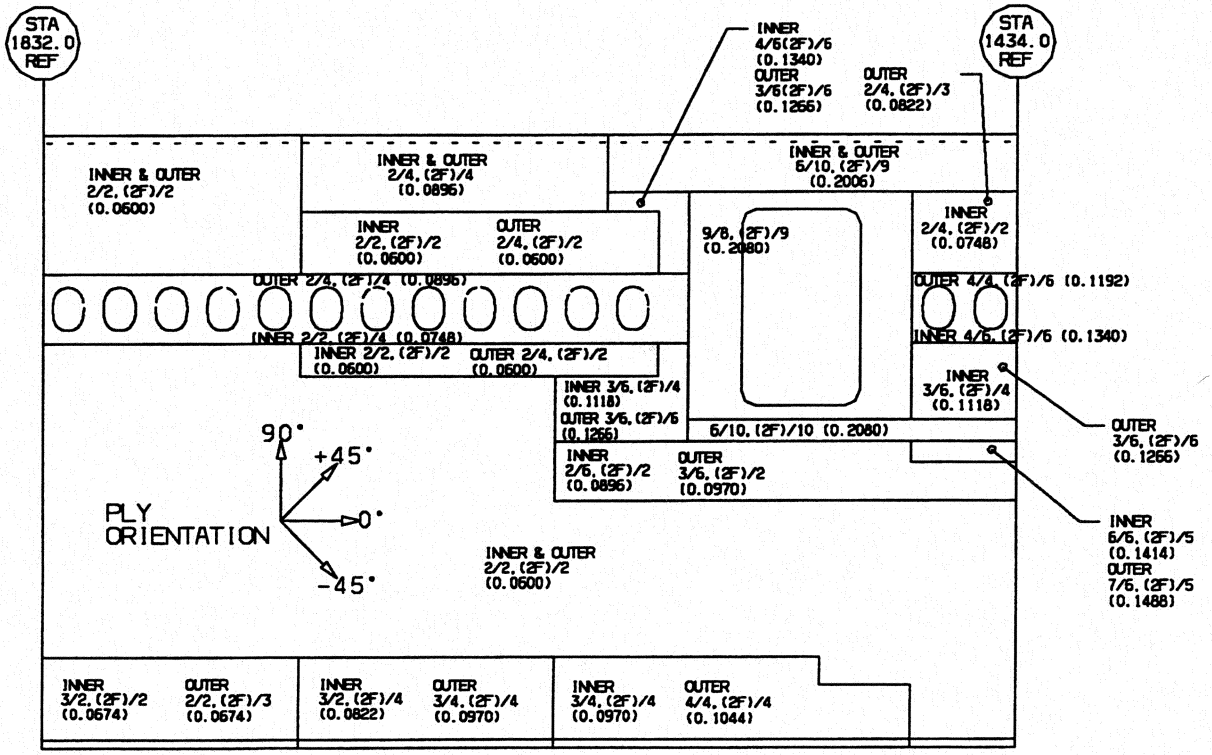

Figure 5-23. Ply Tailoring of Side Panel

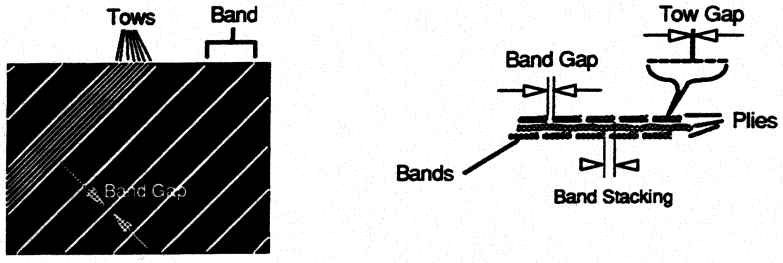

Figure 5-24. Band Stacking, Tow Gap, and Band Gap Measurements

The requirement for location of the band edge is similar to the requirement used for fabricating tape laminates. Typical laminate construction requirements ensure that band or tape edges are offset to prevent gaps or voids in the laminate. The crown panel bands were inadvertently stacked resulting in structural performance improvements. Data from the AFP laminates were collected in an effort to evaluate location variations. Figure 5-25 shows data from one side demonstration panel (SW4) indicating that the average band offset was 0.004" with a standard deviation of 0.049". The structural impact due to this variation has not been characterized.

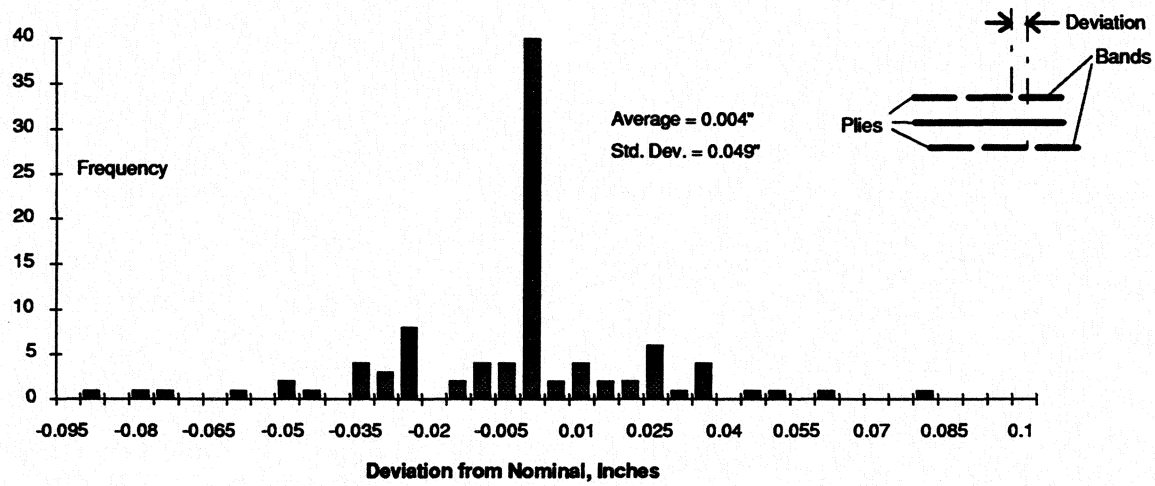

Figure 5-25. Fiber Placement Band Stacking Measurements (Panel SW4)

The gap conditions between tows in the crown panels did not create voids since the high flow resin system (Fiberite 938) flowed to create a resin rich area. The amount of lap and gap between tows is dependent on the AFP processing conditions such as head temperature and head pressure. In addition, the condition of the tow material, including resin advancement and tow width variation, can have more impact than AFP processing conditions. The AFP processing parameters should be optimized for various resin/towpreg systems. Although gap conditions of 0.004" existed in the side panel SW4, cure pressure was adequate to force the low-flow Hercules 8552 resin to fill tow-to-tow and band-to-band gaps. Figure 5-26 shows the tow lap and gap conditions prior to cure. Even with only a 10 psi cure, inspection of the laminate quality produced no void indications.

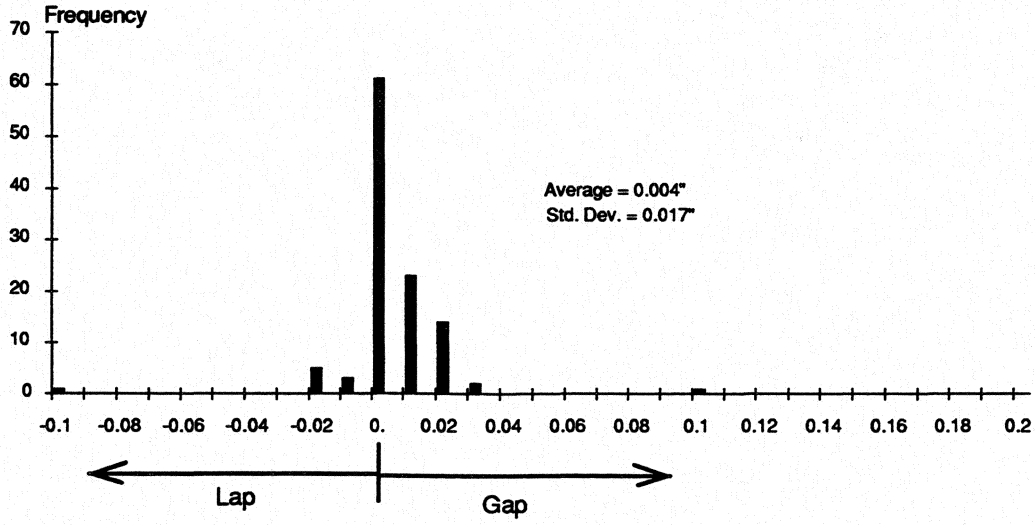

Figure 5-26. Fiber Placement Tow-to-Tow Lap/Gap Measurements

The lap and gap conditions between bands was dependent on the tolerance control of the AFP six axes. Large lap and gap variations were most common near the ends of the bands and in severe contour areas. The roller design at the end of the head did not allow for contour less than the roller radius. In early process trials, when a band was cut, the material ran unguided for four to eight inches over the roller. An improved AFP head design reduced the amount of unguided material to less than four inches for each cut. The resulting amount of band lap and gap, as shown in Figure 5-27, more than met the previously mentioned requirements of ±0.030". The outlying variation shown in the chart might have been due to the material variation before it was processed through the AFP machine. Material width variations in excess of ±0.005" were common in this development phase. All other side demonstration panels showed similar trends except for conditions when ply locations were shifted. This occurred due to tool misalignment or AFP robotic path programming errors.

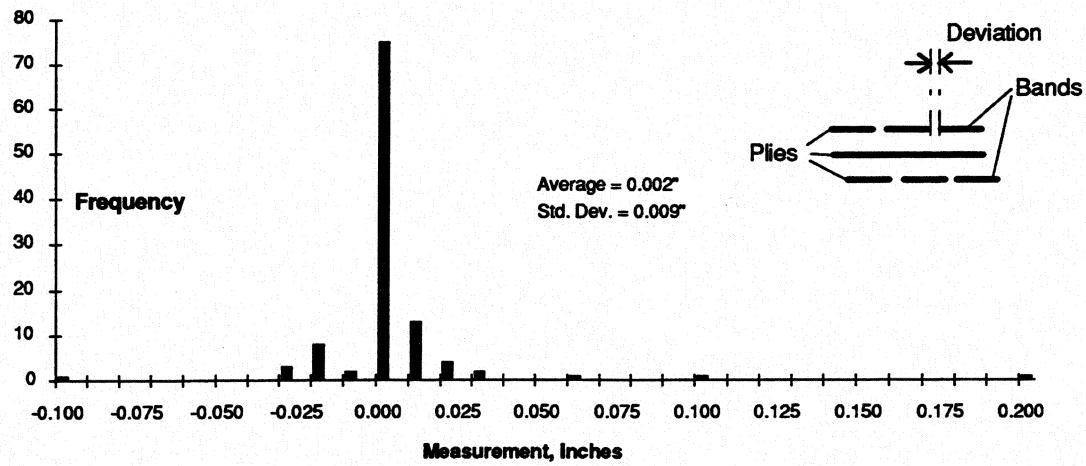

Figure 5-27. Fiber Placement Band-to-Band Lap/Gap Measurements

5.6.2 Frame Fabrication

Side circumferential and window frame elements were braided and RTM'd using 3M's PR500 resin system, similar to parts discussed in the previous Sections. A more in-depth discussion of the window frame development is provided in [18] and [32]. Figure 5-28 shows some of the frame thickness variation for the 7' circumferential frames. Improvements to the circumferential J-frame RTM tooling and press set-up for proper mold closure reduced thickness variation. This can be seen when comparing the SW4 panel frames to SW6 frames (the optimized side panel).

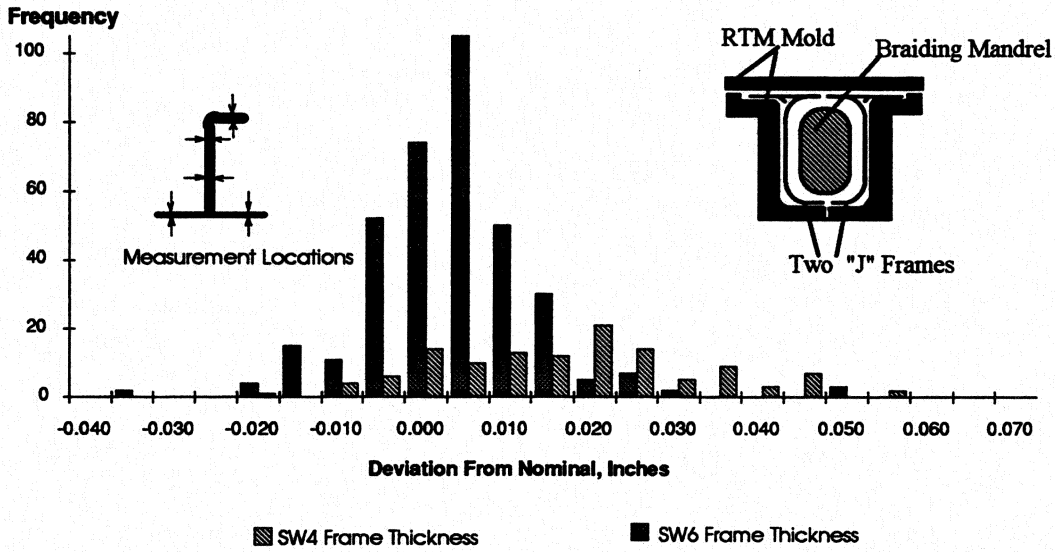

Figure 5-28. Circumferential Frame Thickness Variation, SW4 and SW6

Figure 5-29 shows a window frame developed by Lockheed and Atkins and Pierce. The braided architecture required the use of a 300 carrier braider to ensure that fiber coverage and orientation were suitable for structural performance. The preforms were braided on a tubular mandrel, hand placed into the RTM mold with additional fabric plies, then debulked under heat and pressure. The fiber sizing alone was adequate to tack the preform together (graphite fiber sizing is typically uncatalyzed epoxy resin). The preform was then molded using the PR500 resin.

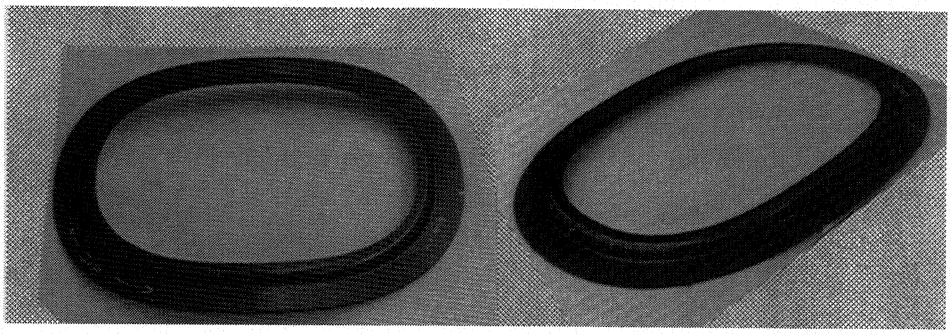

Figure 5-29. Braided Window Frames

The critical dimensional tolerance required for assembly of the window to the IML panel surface was the contour of the interfacing surface. Although deviations as much as 0.050" occurred in the window frame contour (Figure 5-30), they were assembled to the side panel without shims and with acceptable pull-up loads. The contour deviations of three window frames indicated that the frame-to-frame variation was negligible. This suggested the fabrication process was repeatable and that variation problems were associated with tooling inaccuracies.

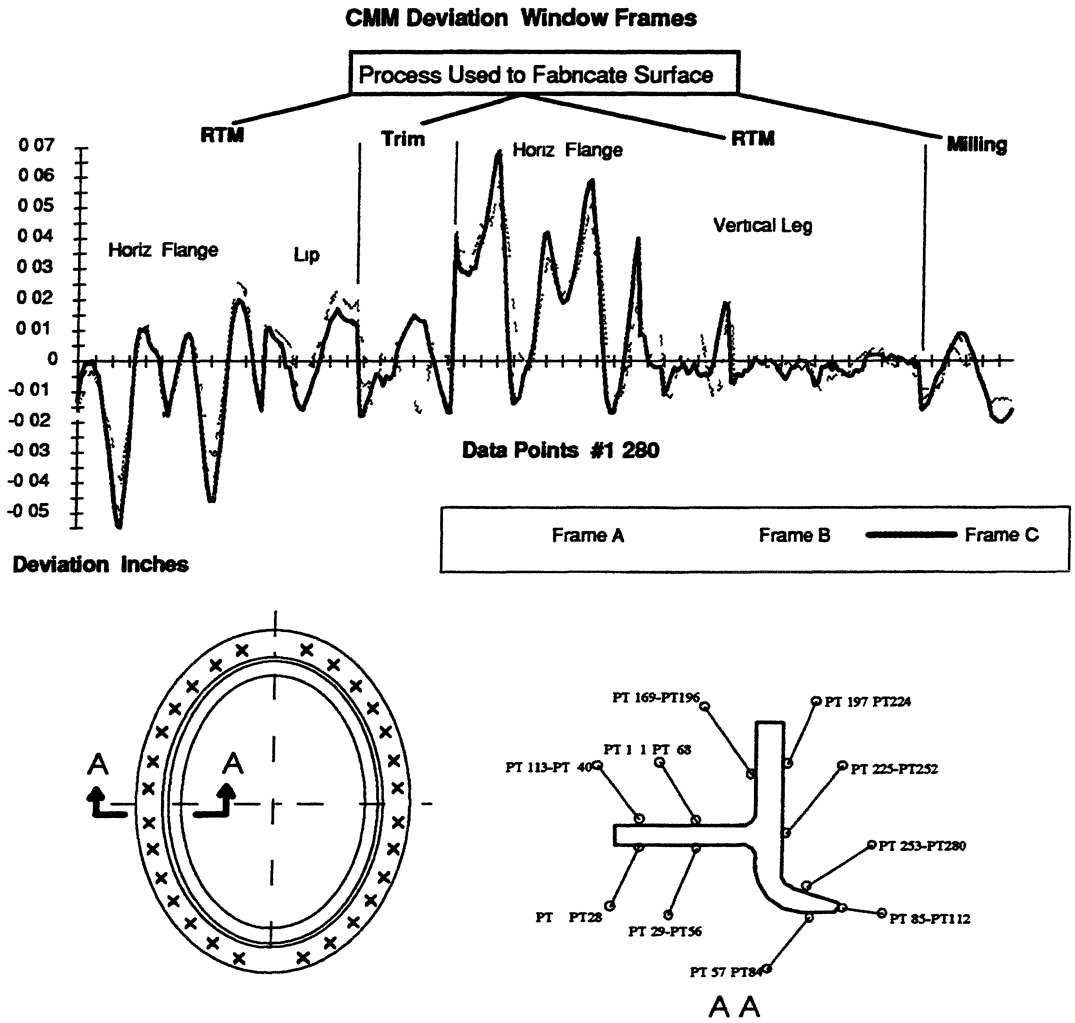

Figure 5 30 SW4 Window Frame Contour Variation

5 6 3 Core Blanket Fabrication

As a replacement for the two-stage cure core stabilization process discussed in Section 5 5 3 two core blanket fabrication methods were pursued These included (1) machining the core contour before forming and splicing, and (2) machining the core contour after the core forming and splicing with a sacrificial ply attached It was recognized that the machining of individual core pieces would not require a large gantry machine center and handling equipment However splicing of the individual pieces would increase risks of anomalies at the splice regions Identified anomalies included splice width and over-foaming of adhesives and an increase in the number of tolerances to be controlled Also core thickness mismatch could only be corrected by local hand working before the spliced blanket is assembled in the panel The alternative practice of cocuring the foaming adhesive as in Method 1 could also lead to increases in porosity in the laminate above and below the splice joint due to lack of pressure produced by the foaming adhesive The machining of one large core blanket would eliminate these risks but additional costs for contour holding fixtures as well as handling risks would be incurred

The first subscale hardware fabrication demonstrated contour machining of core details before blanket assembly Milling core sections in the flat condition is known to reduce costs However the Korex core experienced a 1% shrinkage in the direction normal to the ribbon during forming at 450°F Since the core could not be stabilized during forming accurate core contour control could not be maintained Therefore contour machining after forming and splicing should be considered for detail tolerance control In order to limit the thermal shrinkage effects subsequent core blankets were first formed at 450°F Then they were spliced together with foaming adhesive (Synspand X9899) with stabilization plies on the OML core surface A 5 axis high speed router was used for the machining operation which used a contoured mill fixture as shown in Figure 5 31

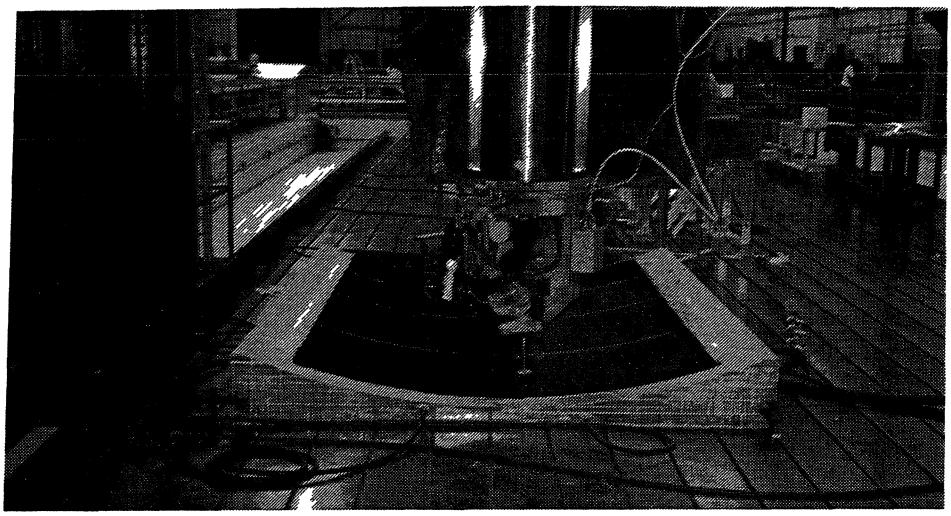

Figure 5 31 Core Machining Mill Fixture

Optimization efforts for core machining processes determined that machining direction speed and cutter type significantly affected surface quality Optimal surface quality was obtained when machining parallel to the core ribbon direction Both a 4 valve stem cutter (a smooth knife edged cutter that looks like an engine valve) and a six point star carbide cutter were used at 10 000 and 8 000 rpm to machine the core Machining in the transverse direction resulted in deflection of the core cell walls producing a ridge at the edge of the cutter path Machined thickness variation of the individually spliced core blanket (SW4) can be seen in Figure 5 32

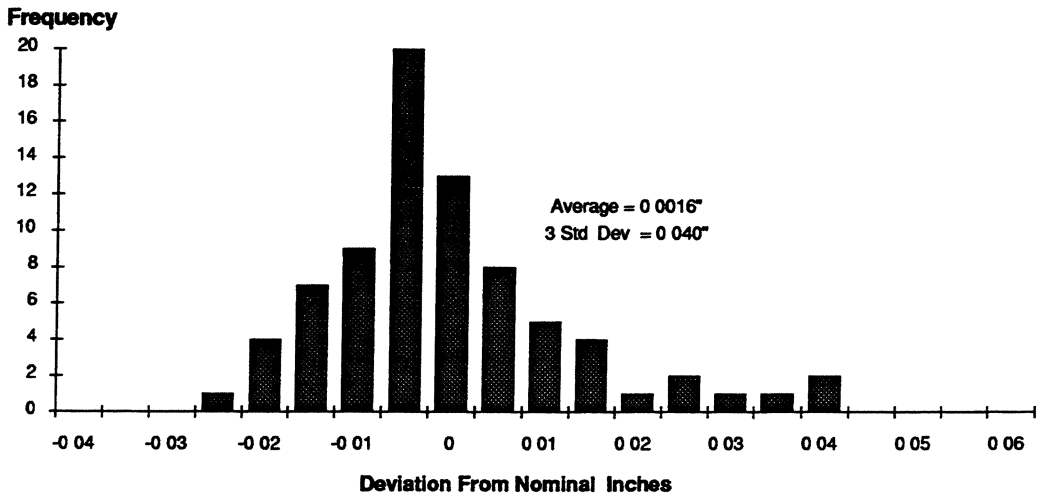

Figure 5 32 SW4 Core Blanket Machined Thickness Variation

Although both sides of the core have contour due to ply tailoring in both skins only one core surface is machined to accommodate both surface contours This eliminates added costs for peel ply application and separate OML and IML core machining fixtures

Window Core Close outs

Three types of core close-out designs were investigated on the full-depth window belt side panels These included a solid fiberglass/epoxy laminate (Figure 5 33) and two types of RTM d close outs with braiding over foam filled honeycomb core The RTM d close outs used either two plies of fiberglass or four plies of graphite fibers (Figure 5 34) The solid fiberglass close outs were constructed from 59 plies of hand laid fabric all in 0/90° orientation to reduce labor costs and cured on a contoured tool Warpage of the laminate was minimal however hand lay up of bulk prepreg broad goods remains a fairly labor intensive task Comparatively the braided foam/RTM close outs had significantly higher costs due to the complicated manufacturing processes and tooling but saved approximately 1 51 lbs per window These foam filled close outs also had difficulty in reacting fastener clamp up loads All of the full-depth close outs offer additional benefits over ramped (i e chamfered) close outs including improved AFP and core machining efficiencies additional cutout stiffness the opportunity to use either an IML or an OML tooling approach and reduced window frame stiffness requirements

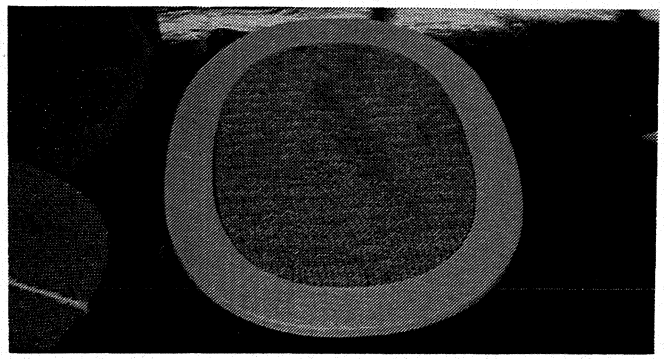

Figure 5-33. Solid Fiberglass Window Close-out and Interior Core Detail

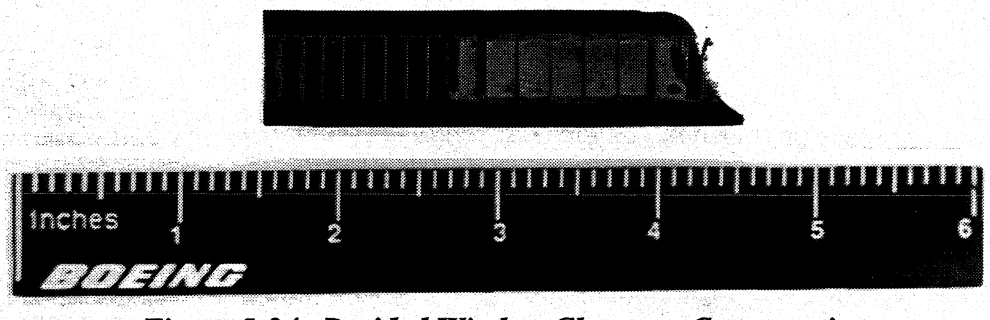

Figure 5-34. Braided Window Close-out Cross-section

Variation in thickness of two of the close-out designs are shown in Figure 5-35. The variation in the parts produced by RTM was higher than the variation in parts laid-up by hand. In comparing additional parts produced from the same tooling, the variations were consistent. This indicated that the variation was due to the RTM mold surface accuracy. The advantage of the solid fiberglass close-out was that variations or modified design thickness could be accommodated with a machining operation with no additional tooling required. Additional processing trials showed that the close-out thickness needed to be thinner than the adjacent core thickness to provide a constant gage panel after cure. This is because the facesheet thins out where it intersects the core cell walls. Also, due to the lack of resistance present at each open core cell, autoclave pressure forces the skin facesheet into the open cell area. These phenomena together are known as "cookie cutting". The amount of facesheet thinning depends on cell size, cell wall thickness, autoclave pressure, and resin flow characteristics. Figure 5-36 shows a braided fiberglass close-out being installed into a full depth core panel.

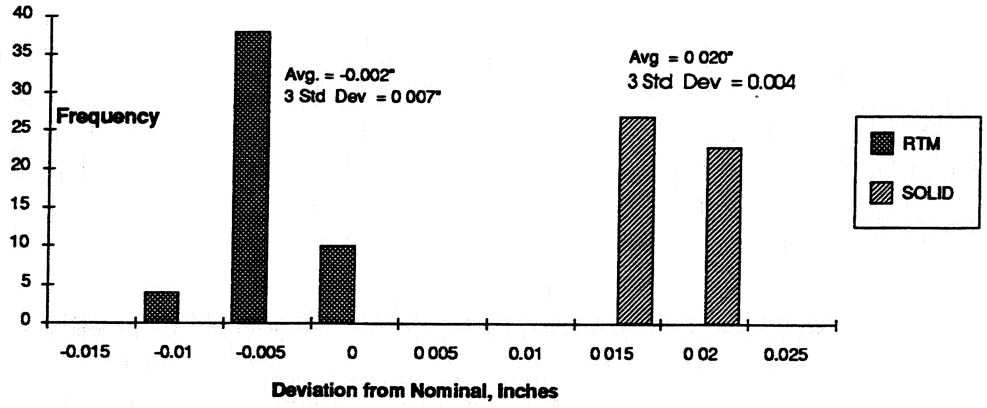

Figure 5-35. SW6 Core Close-out Thickness Variation

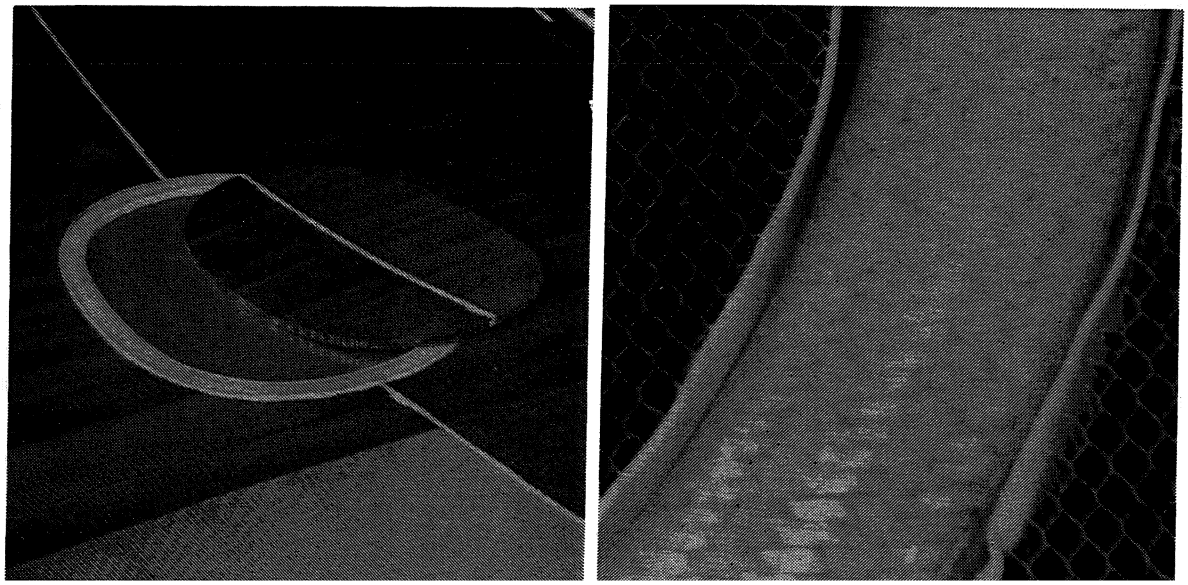

Figure 5-36. Installation of a Close-out During Panel Assembly

5.6 4 Panel Assembly/Cure Tooling

OML Tooling Approach

The OML tooling approach used for the keel and crown panel development was also used for two of the side panel subcomponents Tools from the crown and keel work were used for the side without modifications. These included the OML Invar-36 cure tool AFP winding mandrel, frame location fixture, and reusable silicone cure bag New IML flexible cauls were constructed from four plies of graphite/epoxy fabric and one ply of Viton rubber for each specific panel The rubber had one side faced with Fluorinated Ethylene Polypropylene (FEP) which eliminated the need for a release ply The use of frame location fixtures during cure was evaluated for their ability to maintain accurate frame location Preliminary data suggested that the fixture did not improve location accuracy but lowered the risk of frame movement during panel assembly and cure preparation The effect of tooling on part dimension control was evaluated by measuring cure tool contour skin core, and frame location before and after cure In addition, FEM analysis was used to evaluate the effects of the cure tool CTE on panel shrinkage as discussed in [22].

IML Tooling Approach

Lockheed developed and fabricated a composite IML tool which included frame location cavities The tool was designed as both an AFP winding mandrel and cure tool, its use was demonstrated on two large subcomponents The use of the IML tool reduced the risk of frame mislocation by providing frame pockets to positively locate the precured details. In addition, the IML approach suits the chamfered window belt close-out design pursued by Lockheed by forcing the skin/core to the contour of the joggled frame. All panel assembly procedures were completed on the AFP machine, eliminating the need for skin transfers [18]. This tooling approach also eliminated the need for individual cauls, frame location fixtures and pleated reusable cure bags.

5.6.5 Panel Assembly/Cure

Panel bond assembly entailed assembling the two uncured facesheets, the honeycomb core blanket, close-outs, and the precured circumferential J-frames. Precured elements were added to close out the core edge at the window cutouts, as previously discussed Synspand X9899 foaming adhesive was placed in the gap between the core and the close-outs Adhesive film (0 009" thick) was placed between the bonding surfaces of the frames, core details, and facesheets Surface preparation was required for the bond fay surfaces on all precured elements Surface preparations included use of either (1) peel ply (2) peel ply and solvent wipe, or (3) solvent wipe and abrade. Frames were located on the IML surface with the location fixtures at the ends of the frames. Mislocating these details results in mismatch at frame splice joints during final barrel assembly, adding cost and weight in shimming Frame core, and skin movement were monitored before and after cure in an effort to determine the relationship between panel shrinkage and tolerance control of individual elements

Skin-Frame Bondline Gap Conditions

Prior to installation of the precured J-frames the contour of the frame base flanges and the uncured IML skin were digitized with a laser interferometer (SMART 310 laser tracker system). The two data sets were compared using a best fit function in CATIA to define the gap conditions before cure Gaps between the frame and the uncured skin assembly were significant. This was due to (1) an out-of-tolerance machined core contour (2) the mislocation of ply drops in the IML tailored skin, and (3) the incompletely debulked skins Figure 5-37 shows a frame located on the uncured IML skin and a gap condition of more than 0 100' The measurements of these gap conditions were compared with the post cure internal porosity data to determine allowable panel assembly gap conditions Details of this comparison are in Section 5 6

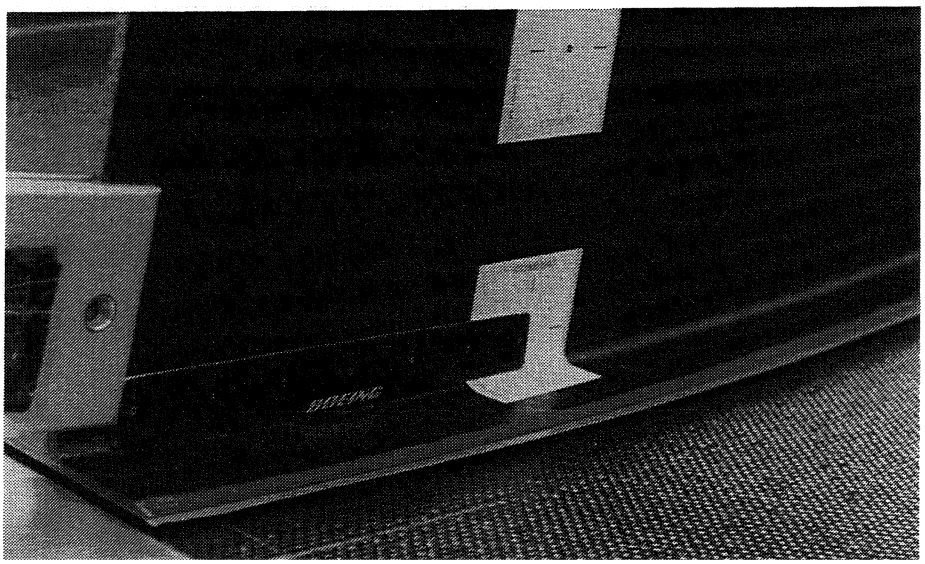

Figure 5-37. Gap Condition at the End of the Circumferential Frames

Autoclave Cure

The cure cycle developed for the Hercules 8552 system and the sandwich keel panels was used for the side panel fabrication. Previous cure studies indicated that the heat transfer throughout the panel was not significantly different between the two tooling approaches, IML graphite versus OML Invar-36. This suggested that panel shrinkage of a laminate skin would also be similar to that of a sandwich panel. Figure 5-38 shows the cure cycle for one subcomponent panel, SW4, in which the autoclave pressure only reached 10 psi during cure Low flow resin systems typically require higher pressure to ensure full skin compaction and elimination of voids The skin quality of this panel was acceptable and is discussed in Section 5.6

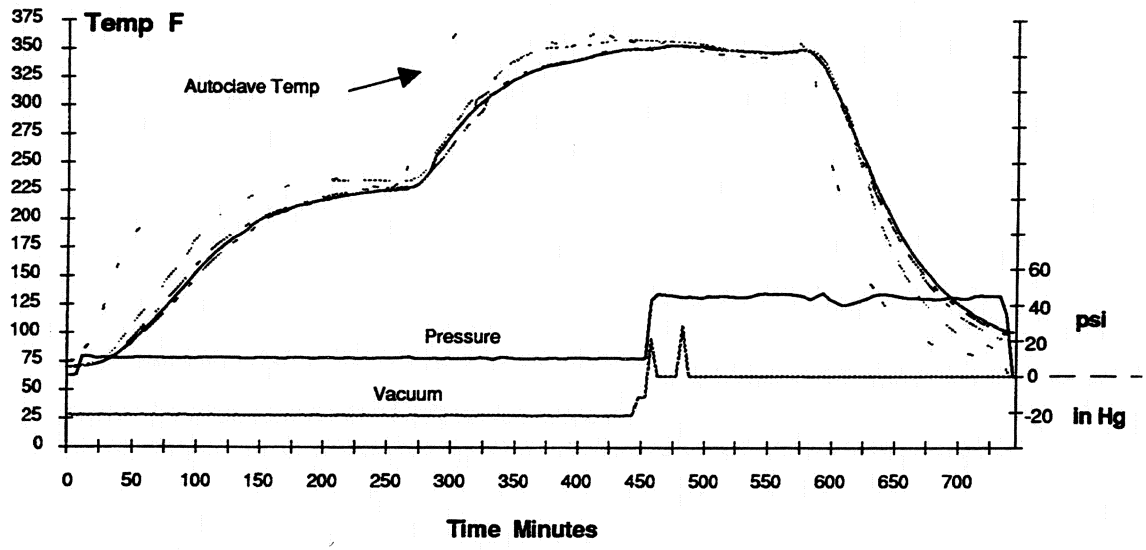

Figure 5-38. Autoclave Cure Chart for SW4

Trim, Drill, and Assembly

Cured panel trim and window-belt cutouts used a 5-axis high speed router with a diamond abrasive cutter. Panel fixturing was accomplished with a contoured vacuum chuck (Figure 5-39). Window contour cut-outs were made by hem stitching around the cutout with a 1/2" ball nose cutter Hem-stitching, the process of passing a cutter back and forth to produce a contour, is illustrated in Figure 5-40 Large production runs would require the use of form cutters to reduce the run time. Cutters used for peripheral trim were all abrasive ball nose cutters Cutters utilized included either 30 grit (rough trim) or 100 grit (finish trim), with rotation at 8,000 to 10,000 rpm.

Figure 5-39. SW4 Window Cutouts and Mill Fixture

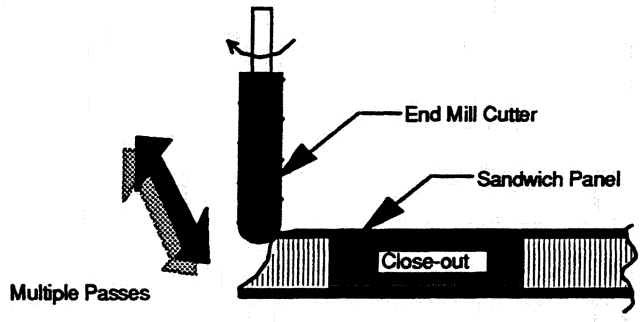

Figure 5-40. Hemstitching Window Cutouts

The mechanically attached window frames and the sandwich panel were drilled separately using independent NC data sets as shown in Figure 5-41 Steel Hi-loks were installed and torqued to 40-60 in/lbs. Figure 5-42 show a fully installed window and frame including production window seals, and clips. A slight mismatch between the window and the frame occurred because the seal taper did not match the composite frame taper, as illustrated in Figure 5-43 Optimizing the design of the window frame lip and the RTM mold would eliminate this condition The number of fasteners and the upstanding frame leg are based on stiffened laminate skin designs The inherently stiff sandwich design offers advantages such as reducing the number of fasteners A stiff sandwich design could also reduce cost by reducing the size and/or complexity of the frame [30], or possibly eliminating the frame altogether. The finished pressure box panel SW4 is shown in Figure 5-44

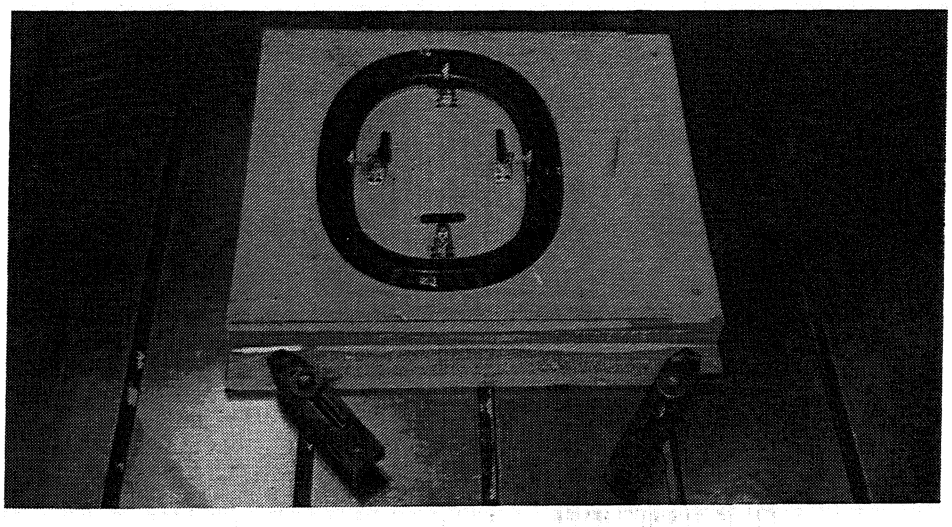

Figure 5-41 Window Frame Element and Drill Fixture

Figure 5-42. Window Frame Element Installed and Assembled

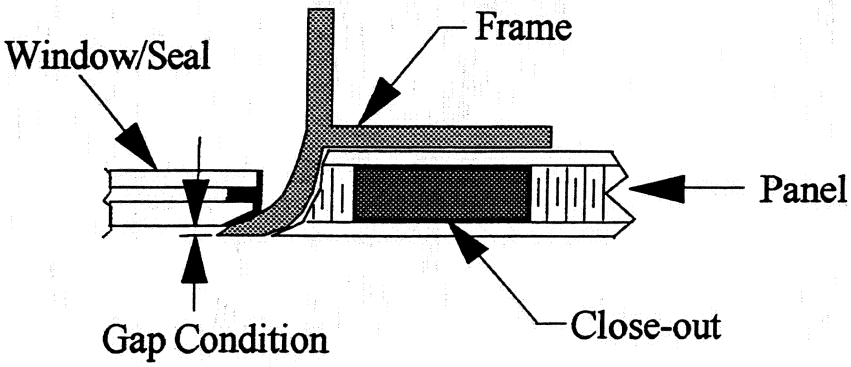

Figure 5-43 Gap Condition at the Frame/Window Interface

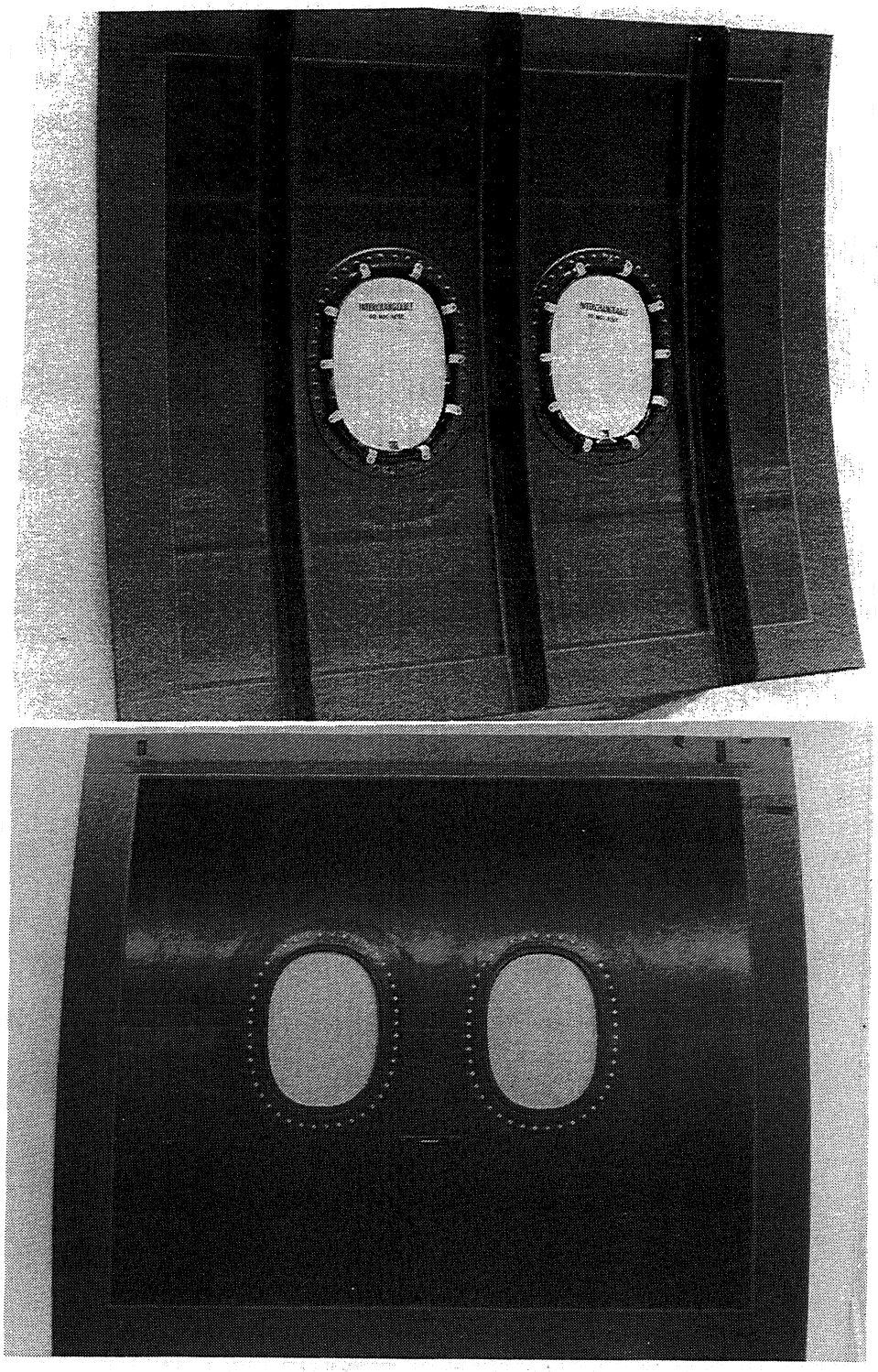

Figure 5-44. Finished Pressure Box Test Panel

5.7 Evaluation of Panel Quality

The inspection data from the side panel demonstrations were evaluated to determine effects of tooling approaches, cure cycle optimization and panel assembly methods to support a follow on full-scale development program. The side manufacturing database will be integrated with the crown and keel data to determine trends for process control and design configurations that provide dimensional stability

5 7 1 Panel Dimensional Tolerances

The amount of panel shrinkage can be attributed to (1) resin chemical shrinkage, (2) cooling from 350°F to room temperature, (3) the out-of-plane fiber distortion caused by frame sinkage and (4) panel and tooling CTE mismatch Skin shrinkage core movement, and circumferential frame movement were monitored using optical targets as shown in Figure 5-45 Monitoring was performed for both IML and OML tooling approaches. The use of the CATS and Smart 310 systems provided locational and contour data with less than 0 002' measurement error Figure 5-46 illustrates the use of the Smart 310 laser tracker system for checking panel contour The location of the targets fixed to the skin, core and frames were determined before and after cure Figure 5 47. shows the skin, frame, and core movement for all keel and side panels with cobonded frames. The skin and frame movement was symmetrical about the panel center. The average frame movement was almost twice the skin movement. The amount of core movement variation was significantly higher, indicating the core does require stabilization during cure and handling A detailed comparison of the skin and core data suggests that the use of a low pressure cure cycle allows the core to move without influencing skin movement. A higher pressure cure would force the skin into the core cell which increases the potential for proportional skin and core movement As discussed in Section 4.6, pressure differential inside the core cells throughout the core blanket can also cause core side-wall crush when cured without stabilization

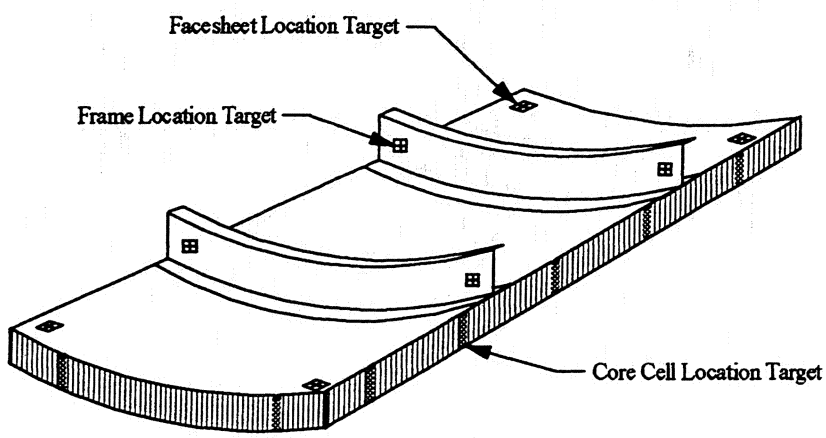

Figure 5-45 Target Location for Measurement of Panel Elements

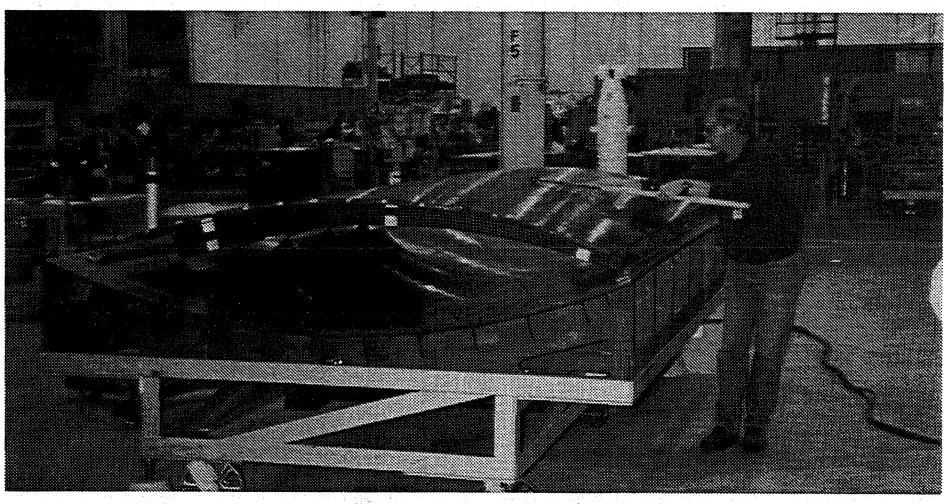

Figure 5-46 Smart 310 Laser Tracker Inspection Of Panel SW4, Post Cure

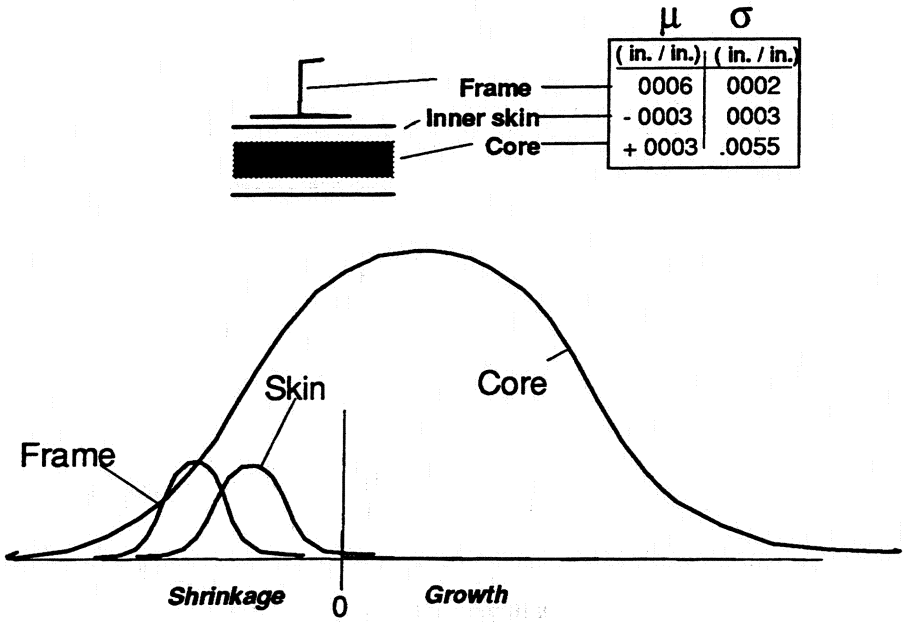

Figure 5-47. Shrinkage and Frame Movement for Sandwich Configurations

One of the risks of IML tooling is the potential for frame bond failure due to tooling interference. The IML tooled panel (SW5) design had a continuous rampdown in the window belt region The IML tool was designed with an aluminum insert to account for the thinner laminate in the window belt contour region The high CTE of aluminum affected the amount of panel shrinkage as shown in Figure 5 48 Panel growth occurred on the panel interior due to the higher aluminum CTE and panel shrinkage occurred around the perimeter where the tooling was graphite epoxy Figure 5-49 shows three distribution curves comparing an OML tooled panel, an IML tooled panel, and all sandwich configured demonstration panels. The standard deviation for the OML tooled panel was one third of the IML tooled panel even though the frames were not constrained. The difference in the average frame spacing is related to the degree of out of-plane fiber distortion due to frame sinkage. During cure of the OML tooled panel autoclave pressure forces the frame flange into the skin In the IML tooled panel, the skin is forced against the frame flange which is supported by the surrounding tool material

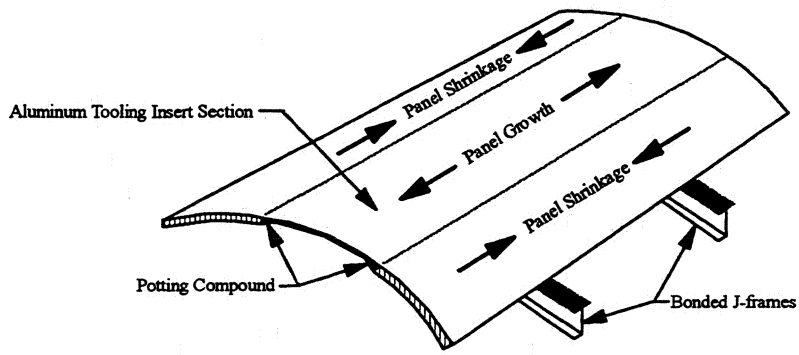

Figure 5-48. Shrinkage Versus Tooling Material for the IML Tool

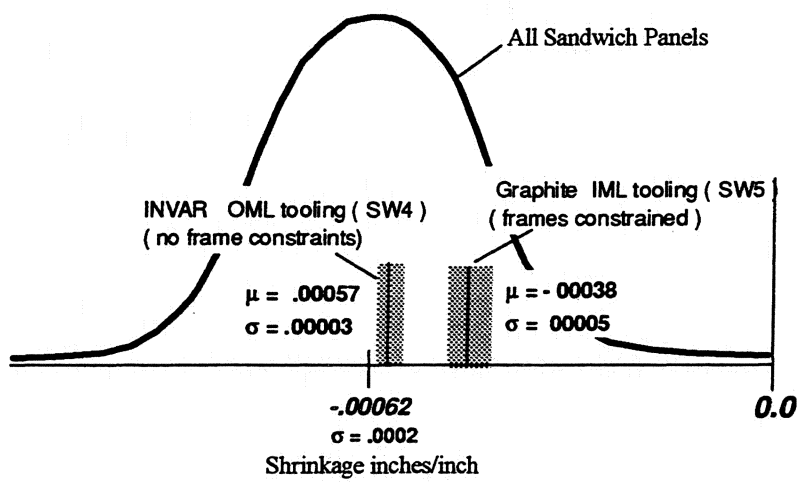

Figure 5-49. Frame Movement by Tooling Approach

The average frame movement can be compensated for by increasing the spacing between frame location cavities in the IML tool by 0 008' The frame location fixtures for the OML tooled panel would have to be repositioned 0.012 '. In comparison the tool fixtures for the crown skin stringer-frame design would have to be repositioned 0 076" from nominal location for each frame bay Assuming the worst conditions for frame location deviation (σ= ±0 0002 inches/inch), the maximum frame mislocation would be approximately ±0.015 ' at each frame location in the OML sandwich design. In comparison, the skin stringer-frame crown frame mislocation would be ±0 090' at each frame If the panel shrinkage is compensated for, then only liquid shims would be required to splice the frames together during barrel assembly reducing the cost/weight of installing hard shims.

One approach to lower the risk of frame disbond during shrinkage of the IML tooled part would be to reduce the flange taper (and corresponding tooling taper) Reduction of the flange taper angle will decrease bondline shear stress during autoclave cool down Another method of lowering the risk of frame disbond would be to reduce autoclave pressure during cool down Autoclave pressure is not critical during cool down where approximately half of the panel shrinkage occurs The reduction of autoclave pressure would allow the frame to move up the frame cavity in the IML tool

5.7.2 Sandwich Panel Quality

Inspection processes used to validate panel quality included TTU X-ray and photomicrographs of panel sections. TTU was performed using the equipment shown in Figure 5 50 at a frequency of 1 MHz. Attenuation losses of 6, 12, and 18 dB were selected for inspection criteria in which panel uniformity was checked Quality standards for the Hercules AS4/8552 sandwich panels were not developed at the time of testing Therefore, attenuation loss uniformity in correlation with destructive sectioning was used to evaluate internal porosity levels. Laminate quality was found to be acceptable per this attenuation loss/uniformity criteria. The ability to inspect the frame-to-skin bondline was limited. X-ray methods were used to inspect the bond between the frame flanges and skin. Inspection of the bonded interface directly below the frame radius noodle could not be accomplished with current methods

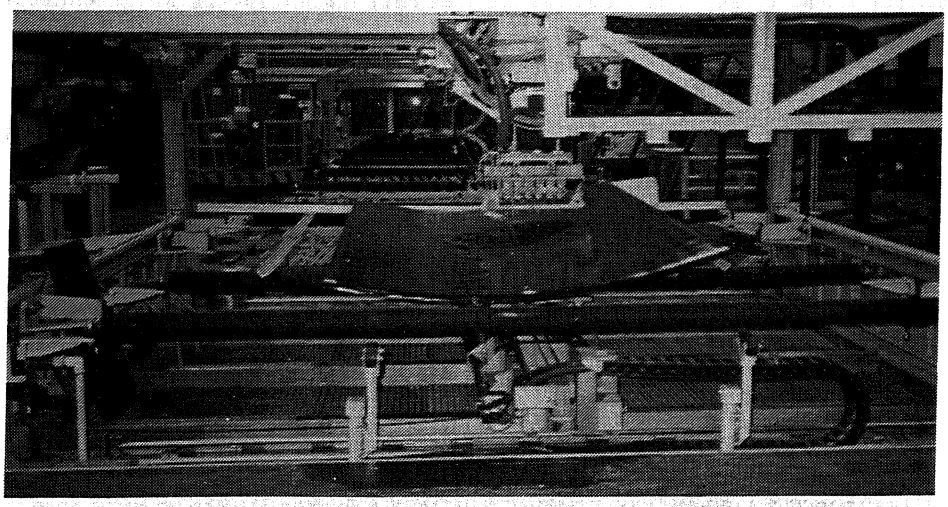

Figure 5-50. Through Transmission Ultrasonic Inspection of Panel FK5

Panel Warpage

Panel warpage was measured using the Smart 310 laser tracker as previously mentioned Measurements were taken before and after panel trim (Table 5-4) The average deviation was 0.004" from the nominal 122 inch radius design. Deviations less than 0.008' generally do not require shimming at the splice joints Additional panel demonstrations would have to be completed to ensure a significant level of confidence that deviations would not exceed 0.030' (where hard shims are required) Although the whole panel contour was slightly changed due to window cutouts (Figures 5-50 and 5-51), this effect on a full-size panel would not be as significant due to the increased distance to the panel edges Only local warpage would occur around the window belt region Although the amount of induced warpage does not significantly impact aerodynamic efficiencies, assembly costs for attachment of window frames may increase due to shimming. Shimming would not be required if the degree of local warpage is constant This could be compensated for in the RTM tooling used to make the window frames.

Table 5-4 Deviations from Engineering Nominal, SW4 Contours

Panel	Average Deviation	Three Standard Deviations
Before Window Cutouts	0.004"	0.016'
After Window Cutouts	0.007'	0 025'

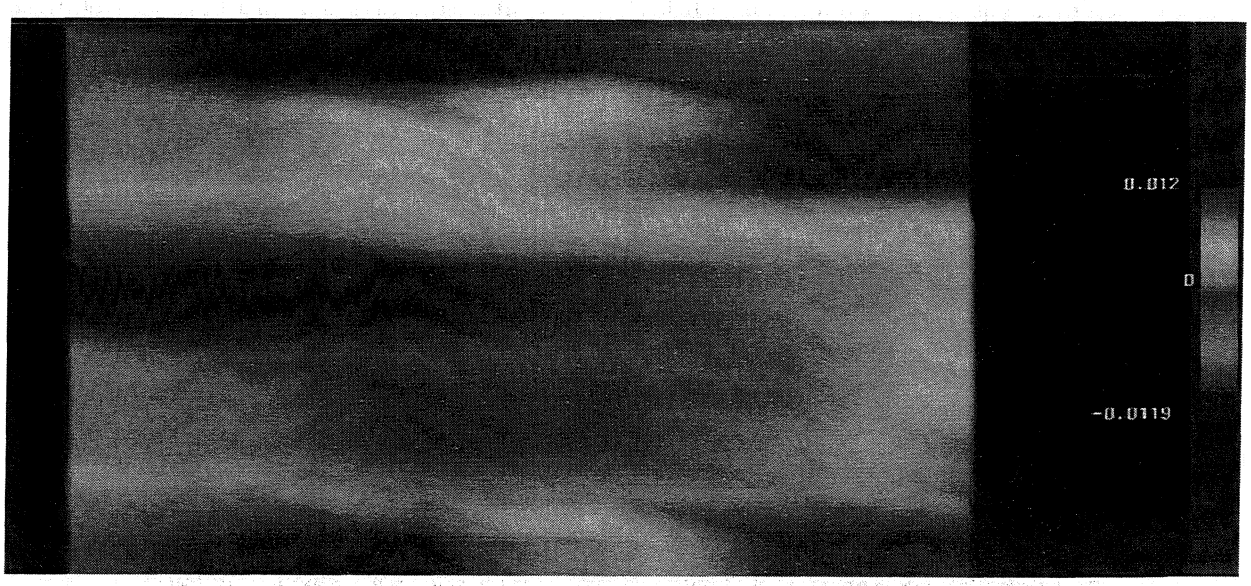

Figure 5-50. SW4 OML Warpage Prior to Window Cutouts

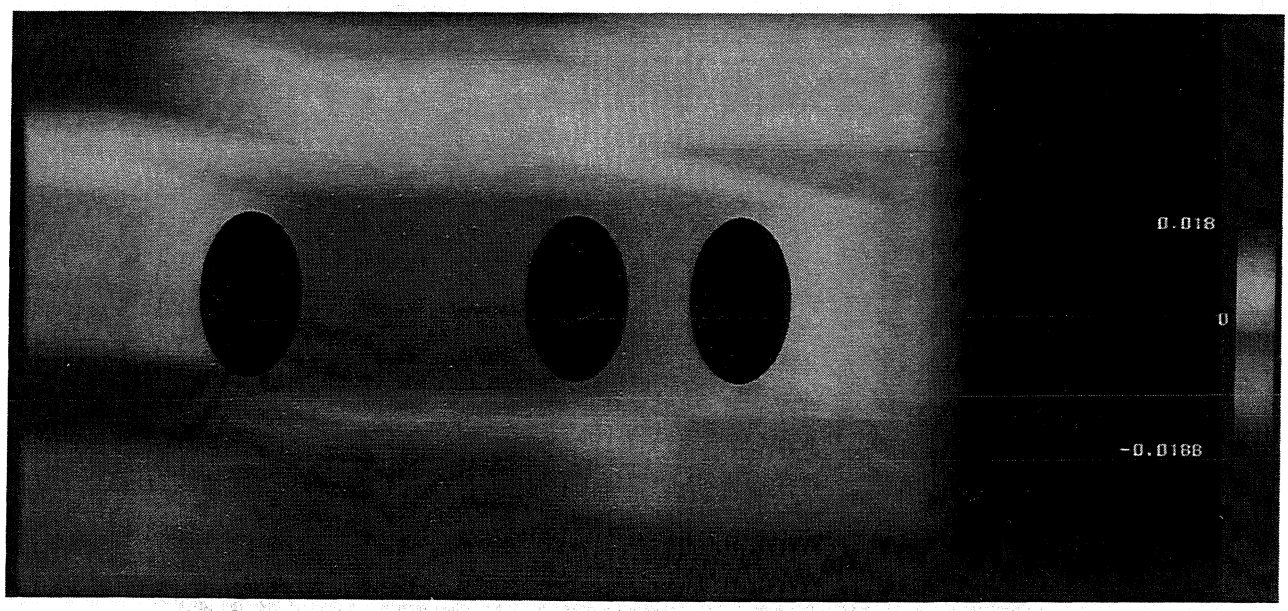

Figure 5-51 SW4 OML Warpage After Window Cutouts

Frame-to Skin Bond Evaluation

The frame-to-skin bond area was evaluated to determine if 10 psi cure pressure was adequate to compensate for gap conditions in excess of 0.100' between the frame and skin. Sections along the length of the frame bondline were examined and compared to known gap conditions before cure. Gap analysis was accomplished by best fitting the precured frame flange contour data to the uncured IML skin data Deviations from the frame base flange surface directly under the web of the frame to the IML panel surface are shown in Figure 5-52 The length of the vectors in the figure correspond to the amount of gap between the frame and panel before cure Areas where the vector length is minimal are associated with significant ply tailoring and core-to-skin mismatch These areas are typically not fully compacted during the AFP process This caused local high spots that the frame rests on during panel assembly. These "high spots" can be seen in Figure 5-53 where the adhesive between the frame and skin is forced out due to the localized pressure during cure. The panel was sectioned under the frame where the facesheet ply drop offs interface with the core ramp Internal porosity was less than 2% in this tolerance-critical area, as shown in Figure 5-54. Areas of significant precure gap conditions showed no significant fiber distortion. These preliminary results indicate that low pressure cure of a low flow resin system can compensate for assembled panel out of-tolerance conditions of less than 0.100' Actual allowable gap conditions for full-scale panels with frame arc lengths that are two and half times longer than the subscale demonstrations will require verification at a larger scale.

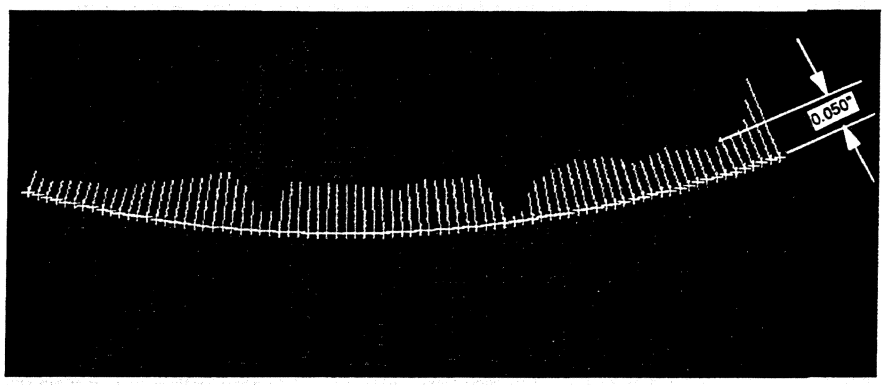

Figure 5-54. CATIA Gap Projections Based on Data from the Uncured SW4

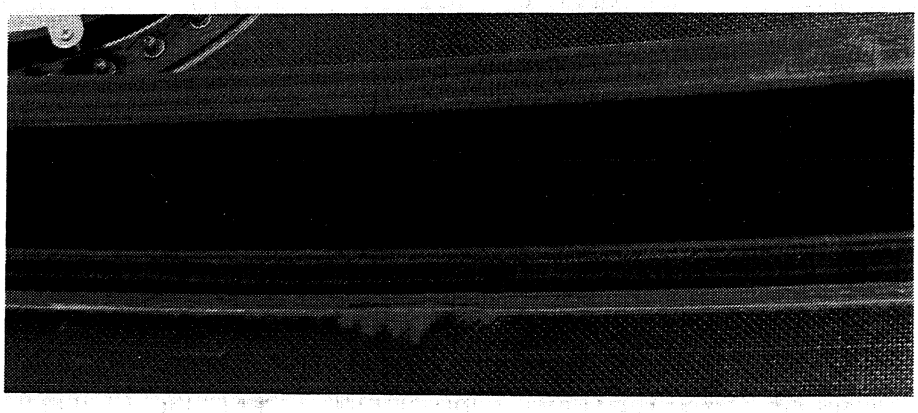

Figure 5-53. Adhesive Squeeze-out at the Ramp/Frame Interface

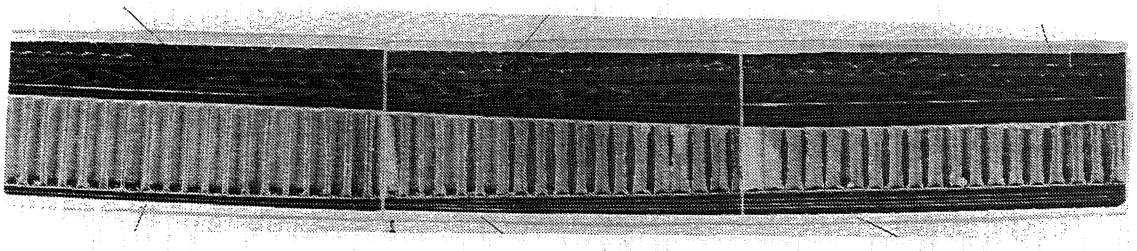

Figure 5-54 Photomicrograph Under J-Frame in the Core Ramp Region

Figure 5-55 shows a window close-out in a cured sandwich panel Some minor porosity was found in the toolside facesheet directly underneath the foaming adhesive This was in part created by low pressure resulting from incomplete expansion of the foaming adhesive at that location Some of this porosity can be attributed to the low pressure autoclave cure. However similar expansion problems were encountered during core splicing with the X9899 syntactic foaming adhesive

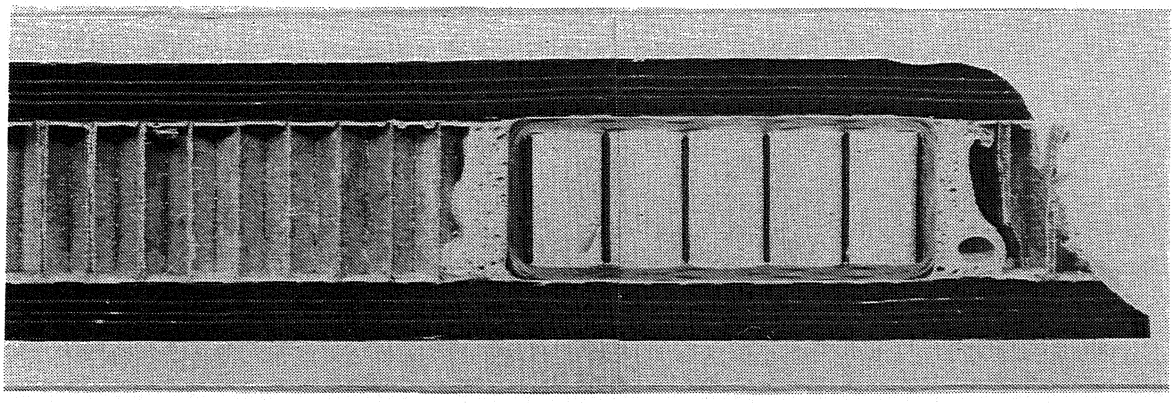

Figure 5-55 Photomicrograph of SW4 Window Close-out

Frame Sinkage

Precured frame elements on crown and keel panels have shown a tendency to sink into the facesheet, forcing resin flow from underneath the frame As previously mentioned, frame sinkage causes out-of-plane fiber distortion that reduced panel length. In addition, resin content underneath the frame was reduced, affecting structural properties The amount of frame sinkage depended on several variables. These included flow characteristics of the resin system, mobility of individual fibers, mislocation of tools, or improper tooling fit which created lower pressure areas. During cure, the resin will flow to lower pressure regions pushing the fibers ahead and causing fiber distortion. Figure 5 56 shows facesheet thickness variation at the edge of the frame flange Tapered frame flange edges and flexible cauls can lessen the amount of bridging of the bagging materials between the facesheet and the flange Flange tapers less than 15° are difficult to achieve with current machining capabilities The effects of using lower flow resin systems and surface fabric plies can be seen in comparing the crown skin-stringer-frame demonstration panels and the side sandwich panels. The fabric ply reduces fiber movement which also inhibits resin flow Up to 25% skin thickness reduction was measured on crown demonstration panels In contrast, the maximum skin thickness reduction for side and keel panels was less than 10%.

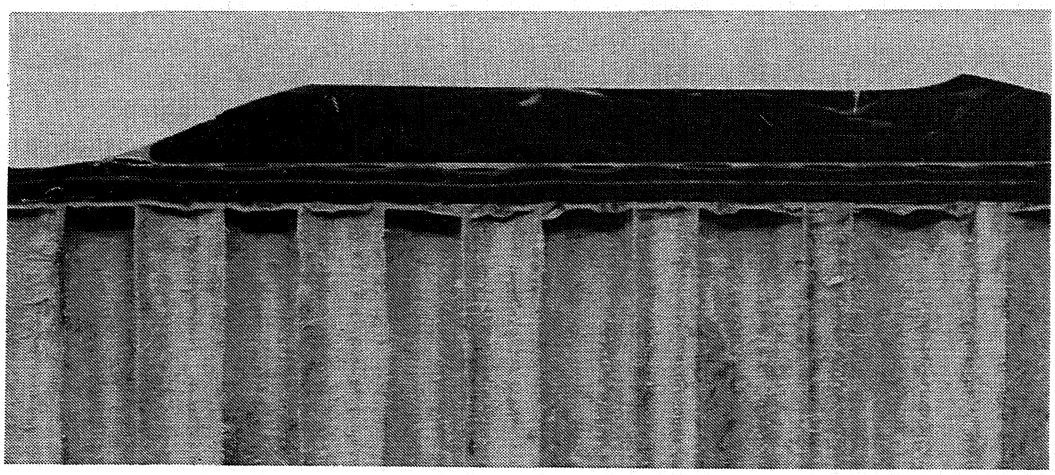

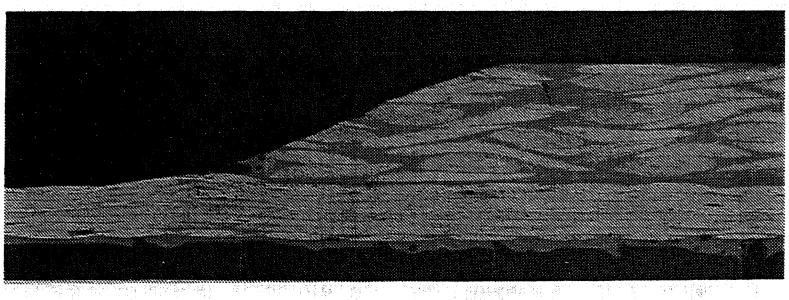

Figure 5-56 Photomicrograph of SW4 Frame Sinkage

6.0 EVALUATION OF MANUFACTURING FOR FULL-SCALE FUSELAGE

The goal of the NASA ACT program was to verify cost and weight benefits of composite primary structures through full-scale demonstrations supported by predictive cost, processing and structural performance models Calibration of these models requires manufacturing demonstrations and structural performance databases to characterize design-manufacturing cost relationships [1] Figure 6-1 Initial development of these models is dependent on data obtained through subscale tests or manufacturing demonstrations Accurate prediction of full-scale structure requires model calibrations based on repetitious full scale hardware demonstrations due to the uncertainty of scale-up effects

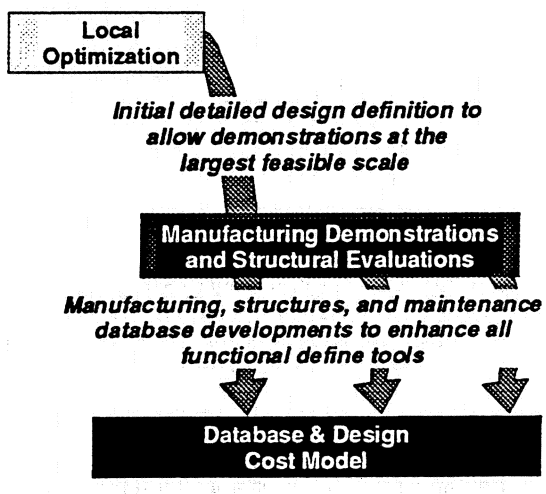

Figure 6-1. Optimizing Configurations for Cost and Weight

The software tool COSTADE was used to optimize the designs based on manufacturing and design constraints developed throughout the program Estimation of the cost of each manufacturing process requires the process to be defined at the detail level and integrated into PCAD Manufacturing plans, which use the PCAD and COSTADE results can be further optimized with factory flow models to determine equipment, facilities, and tooling requirements An example of the portion of a manufacturing plan which represents the AFP process used for fabricating skins is shown in Figure 6-2 Detailed processing steps with associated tooling and materials are also included [31] Sensitivity studies can be performed to identify " bottle necks" in the factory flow due to design details, material limitations or manufacturing process inefficiencies. Although these models may provide insight in determining which manufacturing processes are more cost effective for individual structural elements, the cost impact associated

with downstream effects, such as accurate fuselage assembly, rely on warpage and tolerance assessment models These models are needed to predict assembled gap and interference conditions and associated residual stresses.

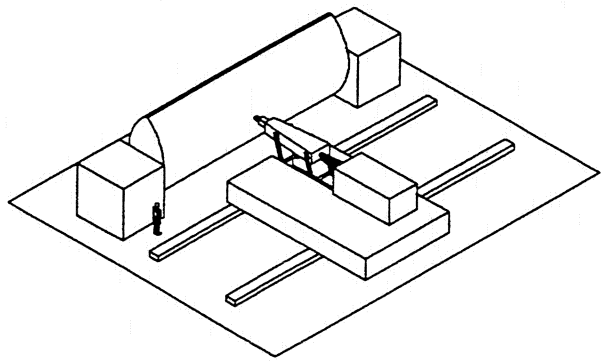

RESOURCE		PROCESS		PART
FACTORY	AREA	STEP	PROCESS STEP DESCRIPTION	PART NUMBER
1	2	10	Identify require items	261X0401 1
1	2	20	Clean OML cure tool surface	261X0401-1
1	2	30	Apply Parti g agent to OML cure tool surface	261X0401 1
1	2	40	Hand layup fabric ply ov r OML cure tool	261X0401 1
1	2	50	Position kin debulk bag	261X0401 1
1	2	60	Debulk hand layed up fabric ply	261X0401-1
1	2	70	Remove debulk bag from skin	261X0401-1
1	3	80	Setup AFP equipment for skin layup	261X0401-1
1	3	90	Layup skin using AFP equipment	261X0401-1
1	3	100	Reload prepreg tow onto AFP equipment as required	261X0401 1
1	3	110	Position OML cure tool into AFP cell	261X0401 1
1	3	120	Transfer skin from winding mandrel t OML cure tool	261X0401 1
1	3	130	Remove OML cure tool with ski layup fo m AFP cell	261X0401-1
1	1	140	Protect skin o OML cure tool	261X0401 1
1	1	150	Identify skin on OML cure tool	261X0401 1

Figure 6-2. Example of Detail Process Information Required for Cost and Weight Optimization

Improvement of these models for optimizing designs should also include verification of specific design details and associated manufacturing processes, effects of defects from processing conditions, and process control limitations for each process The following discussion includes results from the manufacturing demonstrations for the crown keel, and side quadrant panels which provide insight for these types of model improvements

6.1 Design/Manufacturing Assessment

A significant risk associated with composite fuselage is the ability to assemble the individual quadrants without major costs or induced stresses during assembly. The assembly of large stiffened structure, such as configured sandwich panels, may require significant assembly loads to compensate for panel warpage conditions. In addition to panel warpage, shimming costs increase due to mislocated stringers frames and other fastened details. Causes of panel warpage

and dimensional accuracy are dependent on (1) resin and fiber type (2) part to part variation due to lack of process control, (3) tooling material and design, and (4) panel design details

Total elimination of warpage is difficult when optimizing for cost and weight requirements Therefore compensation methods must also be employed to accommodate warpage or tolerance accumulation conditions Compensation methods for warpage include part or tool modifications assembly shims, and pull up loads Warpage compensation for inherently stiff sandwich structures (keel and side quadrants) may not be possible with assembly pull-up Therefore, only cure tooling contour modifications or shims during barrel assembly would provide compensation. Residual warpage in stiffened-skin crown structure could be compensated with assembly pull-up loads and/or shims. FE models showed that pull-up loads for compensating for crown panel warpage were less than 10 pounds applied at the ends of the stringers and frames [22]. The elimination of shims could reduce fuselage costs by as much as 15% as shown in the recent evaluation of the side quadrant panel (Section 5.1)

Sections 3.0, 4 0, and 5 0 discussed the development efforts for fabricating subscale manufacturing demonstrations for the crown, keel, and side quadrant panels. The technologies developed for the crown panel were further developed for the sandwich keel and side panels In addition to the crown technologies, the fabrication of full-size core blankets was identified as an enabling technology critical for full scale applications. The following discussion will summarize manufacturing development activities and manufacturing lessons learned for full scale structures related to panel details and full-barrel assembly

6.1 1 AFP Process Development

The BCA and TCA heads were investigated for fabrication of fuselage skin panels. The BCA head is designed for large area plies with minimal ply cuts and adds The TCA head is more efficient for highly tailored skins and complex contours AFP development efforts demonstrated fiber placement on tapered core (Sections 4.0 and 5.0) requiring reduced head pressure and lay-down rates. In order to minimize bridging in highly contoured areas, the AFP head is typically programmed to be normal to the contour surface

The ability to eliminate shims for quadrant panel circumferential and longitudinal splices requires that the panel thickness and frame location tolerances are controlled. Skin thickness tolerance depends on material thickness variation and accurate placement of the AFP tow material during skin fabrication Assembly model results indicate a tow width c o.v of less than 4% can minimize shimming for assembly of primary structure This skin thickness variation can be compensated with the semi-rigid cauls used during cure as shown in Figure 6-4 Resin flow during cure produces in and out-of-plane fiber distortions

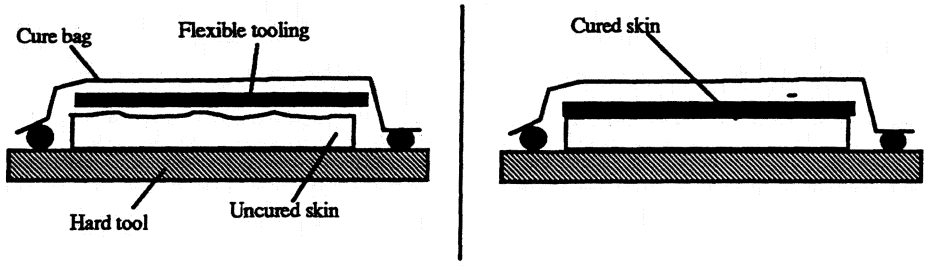

Figure 6-4 Compenstation for Skin Thickness Variatations

Laminate thickness control also depends on the AFP machine to accurately add, drop and place the tow material without fiber distortion Current AFP add/drop accuracy is ±0 3 at maximum lay down rates Accuracy better than ±0 10 could be achieved at significantly lower lay-down rates. Manufacturing trials indicate mislocation of ply edges by ±0 300' within the laminate would not jeopardize the cobond of the skin to frame Significant gaps or laps in excess of 0.030' may cause laminate voids and local skin thickness variation. The width variation of the prepreg tow influences the tow-to-tow overlap or gap conditions in parts fabricated with the TCA head. The BCA head is generally more tolerant of tow width variations because of the ribbonizing process. The amount of ribbonizing which can be performed however, is dependent on resin flow Tow prepreg dimensional control through equipment modifications and process control methods have shown significant improvements. The Hercules 'Hot Melt" impregnation process used for the AS4/8552 system proved to produce a more dimensionally stable tow form (c.o v =4%) than a solution impregnation process (c o v.=6-17%)

AFP processing efficiency also depends on the handling characteristics of the tow material form. Common problems with material quality include (1) improper winding of the prepreg tow which produces tow twists, (2) tow width variations in excess of ±0 005", (3) improper impregnation of the resin into the fiber bundle, resulting in high tack conditions or exposed fibers, and (4) improper resin advancement control. These conditions have been shown to reduce AFP process efficiencies due to debris accumulation in the AFP head, manual replacement of twisted tows, or tow breakage

Lack of control of tow tack conditions were found to severely impact process efficiency The tack of a particular type of prepreg tow may be influenced by altering the resin chemistry, level of advancement, level of impregnation, and by controlling temperature during spooling, storage and fiber placement. Resin chemistry and level of advancement also influence raw material stability in the manufacturing environment (outtime) and flow during cure. The amount of tension applied during prepregging and during fiber placement may influence despooling and adherence to the part. The adjustment of these parameters must be coordinated to provide a robust process for cost-efficient manufacturing To maximize AFP efficiencies, prepreg tow materials must exhibit appropriate tack for despooling and for adherence to the tool or part during fiber placement. Material suppliers have inproved process control for uniform resin distribution and controlled tack levels. Typical problems with resin advancement are that the out time life of the resin is reduced and new cure cycle processing parameters need to be defined.

The efficiency of the AFP process has been evaluated with such models as COSTADE. The AFP characteristics, such as speeds and accuracy were used to evaluate the cost impact of machine efficiency for fuselage structure Equations characterizing the AFP process and sensitivity studies for optimal panel design conditions are discussed in more details in [31] Figure 6-5 shows the relationship of machine rate for various contours and lay-down angles [36] Non axis symmetric contours such as those of ducts produce approximately half the machine efficiency compared to axis-symmetric contours A near linear increase of machine efficiency can be achieved with additional tows as shown in Figure 6-6 AFP efficiencies rates less than 25 lbs/hr require additional AFP machines and tooling to meet the required five shipsets/month production rate If the resin out time life is less than 30 days to complete the skin fabrication panel assembly and cure, increases of AFP efficiency or additional AFP machines will be required.

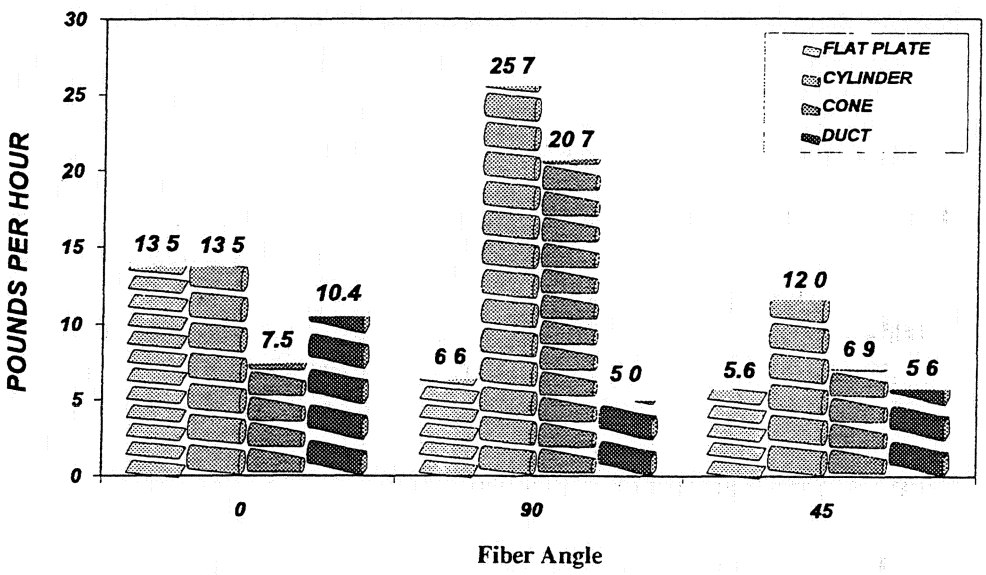

Figure 6-5. Impact of AFP Process Efficiency on Quadrant Panel Costs

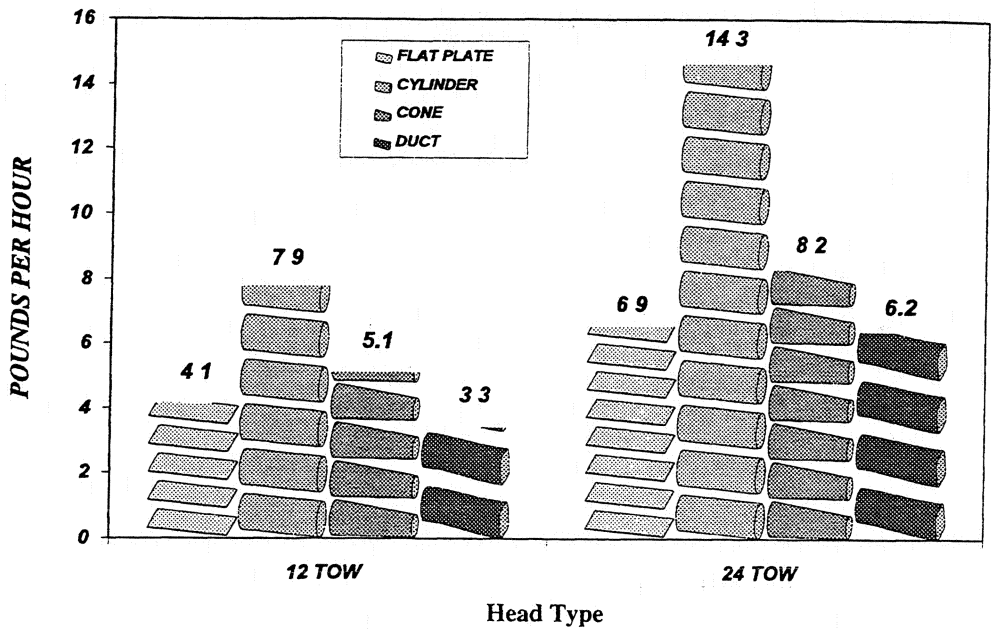

Figure 6-6. Effects of Number of Tows Used for AFP Fabrication

Cost and weight optimized composite fuselage skins will need optimal AFP processing and material parameters. These include maximum course length, simple contours and axis symmetric contours (i e. cylinders), maximum tow thickness and number of tows full-depth core edges instead of ramped core reduced ply add and drop accuracy requirements (>0 3 '), and concave contours greater than the AFP head radius Sensitivity studies to determine optimal processing conditions, for a balance of cost and weight savings, can be conducted with the COSTADE model [31]. When optimizing the design for weight only, the need for significant ply tailoring results in reduced process efficiency

6.1.2 Core Blanket Fabrication

The fabrication of full size core blankets for fuselage quadrant panels presents significant challenges for machining, dimensional tolerance control and handling Core blanket assemblies are constructed from individually pre machined honeycomb core sections with inserts for core edge close-outs, windows, doors, and system attachments The use of foam cores of similar densities for the keel and side panels proved insufficient for structural performance Insitu-foam core was developed as a low cost process for small panel fabrication, but was not suitable for scale-up. The use of honeycomb materials such as HRP and Korex materials showed adequate structural performance at the lowest cost [3]

Methods for machining, stabilizing, forming, and handling full-size core blankets were evaluated through keel and side panel developments. Machining process parameters were defined for HRP and Korex material as discussed in Section 5.3. Improvement on thickness control still requires improved stabilization methods and tighter machine tolerances Accuracy improvement can be

achieved with new ultrasonic cutting technology, which has the capability to machine core thickness to within ±0 005 . The machining of the full size core blanket minimizes risks associated with discrete thickness changes at the splices between premachined details which could cause out of-plane fiber distortion in the adjoining facesheets. Machining capabilities for full core blanket with bonded in details needs additional development with full-scale repetitions

Stabilization of the core blanket is critical for accurate machining curing, and handling Common causes of core movement include moisture absorption and excessive pressure or pressure gradient in the core blanket during cure. Details designed for fastener attachments must be accurately located within the core and must maintain position during panel assembly and cure. Lack of locational control of the these details would require increased detail size to reduce risks of rejectable edge margins. The use of temporary peel ply requires significant labor to apply and remove with the risk of damaging the core. A permanent peel ply would eliminate the labor for removal but additional costs for preparing the surface for cobonding to the skins can be costly and add weight An alternative approach which would provide permanent stabilization is a septum design The septum design comprises two thinner core layers bonded together with film adhesive or a fabric ply (Figure 6-7). This approach has weight penalties due to the addition of the adhesive/fabric layer but the cost savings associated with eliminating the need for core forming can more than compensate for the additional cost of rough cutting two layers of core.

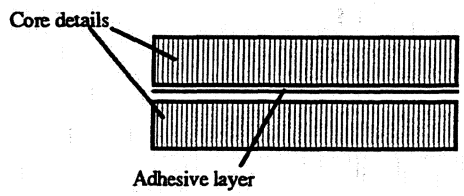

Figure 6-7 Alternative Stabilization Methods

Low cost maintenance and repair of sandwich structure relies on core resistance to moisture ingression. Moisture migration modes need to be well characterized to determine materials and processing conditions that are suitable for damaged structure. Permanent and temporary repair design and fabrication methods for sandwich structures have been developed with airline participation These development activities are discussed in more detail in [34]

One advantage of a sandwich design over a skin/stringer design is the ability to accomondate skin ply tailoring for increased load requirements was shown in Figure 4-25 Design optimization for cost of core blankets should evaluate (1) constant gage core, (2) one-sided core machining, (3) full depth ramps for AFP efficiency, (4) small core cell size to minimize dippling and increase surface-to-skin bond area, and (5) core materials which are easy to machine, form and stabilize.

6 1.3 Precured Elements—Resin Transfer Molding/Braiding

The use of impregnation of a dry fiber preform by RTM or pultrusion processes has shown to be an efficient process for precured elements that are fastened or cobonded to the quadrant panels

[3 13] The RTM d textile preforms for circumferential frames window frames and panel edge close outs were demonstrated as a low cost process for precured structural elements as discussed in Sections 3 0 4 0 and 5 0 The RTM close mold tolerances of less than ±0 010 are essential for minimizing tolerance accumulation during panel assembly

Although the pultrusion process may offer additional cost benefits limitations of constant cross sections reduce the potential areas of application The ability to tailor plies has not been automated for the braiding process and would require precut textile layers to be manually or automatically inserted Costs associated with surface preparation of precured RTM d textile preforms for cobonding were reduced by including a removable peel ply in the fiber preform before resin impregnation As discussed previously the non uniform resin distributions increased microcracking potential and decreased the ability to accurately determine part quality through NDI methods The development of inspection standards for specific textile designs which includes fiber type preform architecture and resin type is required to determine signature differences between resin rich areas and voids

6 1 4 Tooling

A significant influence on part quality and producibility is dependent on the tooling methods materials and accuracy control Although the use of Invar 36 material increases tooling cost compared to composite cure tooling improved durability and tool cycle life more than compensate for the initial tooling costs An OML tooling approach with flexible IML tooling was developed for the crown design (skin stringer) which demonstrated a reusable form fit cure bag to reduce cure preparation and recurring material costs The cure tool design included panel assembly features to locate frames and stringers during cure The flexible IML tooling concept proved to accommodate either skin stringer or sandwich configuration with either high or low flow resin systems

IML and OML cure tooling was evaluated for the various quadrant panels and design configurations Figure 6 8 shows a comparison of the quadrant panel OML and IML tooling in a 25 diameter autoclave The OML tool would require significant more material to ensure that the tool stiffness can maintain a desired contour of ±0 010 accuracy The IML shape is inherently stiff and significantly more manageable for panel assembly transfer and cure than the OML cure tool

IMl Cure Tool *OML Cure Tool*

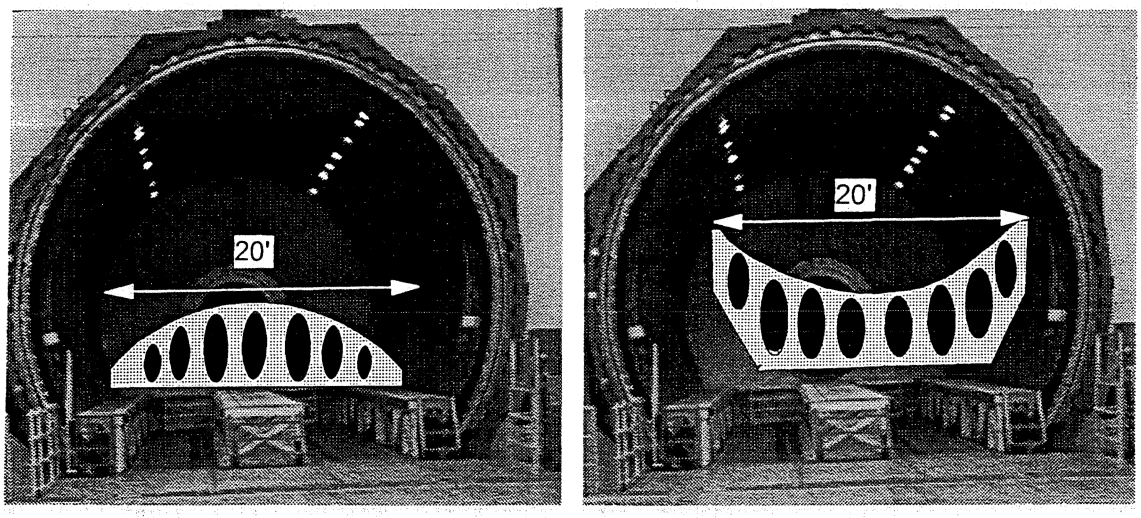

Figure 6-8. Comparison of IML and OML Tooling in Cure

The cure cycle modeling efforts indicated the autoclave temperature profile must be defined for specific tool configurations and autoclave to predict temperature gradients. These studies have not been completed for full-size tooling to determine if the tool design would require flow deflectors to direct the autoclave gas flow for uniform heating

An IML tooling concept was developed for the sandwich configuration which does not include the complexity of frame and stringer intersections IML tool design and fabrication complexity were significantly reduced since a low flow laminate resin system (Hercules 8552) was used. Risks associated with tolerance accumulation in the form of gap conditions at the precured frame/IML skin interface were minimized with IML tooling, assuming that accumulated tolerances do not exceed the aerodynamics requirements. Aerodynamic requirements vary depending on the airplane location. For the 46 section less than ±0 025" contour variation over a 2' length is allowed. The use of IML tooling offers additional cost benefits by eliminating the need for a separate AFP winding mandrel, skin transfer jigs, and frame location fixture. The IML cure tool can self locate the individual frames and does not require a form fit cure bag as compared to the OML cure tool.

Since the IML tool is used as the winding mandrel, composite material must be used to minimize the tool inertia for optimal AFP efficiency In addition, the AFP winding mandrel and AFP machine must be electronically tuned to avoid critical harmonic modes Another advantage of the IML approach is the ability to improve the tooling concept for a full barrel tooling approach. This tooling concept would eliminate the need for splices and provide potential opportunity for non autoclave processes Tooling concepts for large circular structure have been demonstrated

for non autoclave processes which used wet filament winding techniques The use of pressurized bladders can be used to generate pressures required for resin prepreg material systems Cure pressures as low as 10 psi for the side demonstration panels was used with acceptable laminate quality (Section 5 6)

Evaluation of the RTM tooling design indicated that Invar 36 material required more cure processing time compared to an aluminum or steel tool The aluminum tool proved adequate for short length frames (< 3) without significant deformation due to cure residual stresses The use of steel tooling material for eight foot frames required that the cured RTM frames be removed from the tool during cool down to avoid residual stresses that could induce part damage The tool design for quick impregnation regardless of frame length was also demonstrated The use of Invar 36 provided accurate frame dimensions compared to steel tooling material but did not prove to be as durable for life cycle requirements Since braided preforms are difficult to handle without jeopardizing fiber distortion the braiding mandrel is designed as part of the mold tooling to avoid preform handling and unsupported preform cutting and folding of plies to form the individual frame flanges Future tool design must also include features to accommodate radius changes or ply tailoring due to load changes or modified weight reduction requirements

6 1 5 Panel Assembly, Cure and Warpage Control

The panel assembly and cure processes have historically governed individual part quality Accurate location and control of frames tailored facesheets and core during panel assembly and cure is essential for reducing shimming and assembly pull up loads The cure cycle process must be optimized to ensure bond integrity of the facesheets core and bonded stiffeners The development of residual stresses during cure are typically initiated by several factors which include mismatch in CTE between the facesheets tools core and precured frames These stresses can be compounded by exotherming conditions and non uniform resin shrinkage caused by heat and pressure gradients or non homogeneous material form or properties Additional residual stresses can develop from fiber distortion caused by precured frames depressed into the skin during cure Cure cycle and panel assembly processes were evaluated through multiple hardware demonstrations A summary of the findings relative to tolerance control for fuselage barrel assembly follows

Panel Cure

Keel and side panels features sandwich designs which transition into thick laminates in areas of increased loads and/or large cutouts These structural details pose significant processing challenges Cure of the epoxy matrix must be accomplished in a timely manner to avoid uncontrolled exotherm Low cycle time is desirable to limit capital expenditures for tooling and autoclaves while maintaining production rates Also exotherm during the autoclave cure may result in damage to the part and tooling and presents a safety hazard The mechanical properties of epoxy resins are typically dependent on degree of cure An understanding of reaction rate kinetics and of the influence of the cure cycle on matrix properties is therefore required to define an efficient cycle which will avoid exotherm and provide uniform properties

Warpage

Optimization of the cure cycle to minimize panel warpage requires the modeling of autoclave heating characteristics, tool heat transfer capabilities and panel configuration Cure cycle development efforts at Boeing and the University of British Columbia (UBC) focused on the side and keel sandwich configurations Development efforts included evaluation of autoclave heat/rate distribution, tooling material and design effects of core insulation characteristics, laminate chemical and thermal shrinkage, and cure pressure gradients. The preliminary findings from the cure modeling efforts and the side and keel hardware manufacturing database follow.

The ability to transfer heat uniformly requires proper cure tool design for selected tooling materials and autoclave gas flow characteristics. Since heat distribution varies for individual autoclaves physical characterization of the heat distribution must be known for each autoclave Tool designs can compensate for these variations by using gas flow deflectors and/or preferred placement of the cure tool within the autoclave One example is the forward section of the keel quadrant which is designed with a 1.1 thick laminate that transitions into a 12-ply facesheet sandwich Placement of the thick laminate end in a hot section of the autoclave could initiate exotherming conditions resulting in high residual stresses and matrix degradation

The influence of CTE mismatch between the tool, facesheets, core, and cobonded frames proved to have the greatest impact Residual stresses in the frame/facesheet bondline can be reduced by changing the facesheet and frame laminate orientation or using an adhesive that cures later in the cure cycle than the facesheet material The time of gelation of the adhesive must occur after the skin resin chemical shrinkage has occured. Compensation for CTE mismatch between the cure tool and the sandwich panel includes lower cure pressure in the last stages of the cure cycle to minimize frictional forces or the use of a release material with low friction characteristics. Residual stresses developed from the individual IML and OML skins curing at different times due to core insulation characteristics were shown to be insignificant for the Hercules 8552 resin system.

Frame Cobond

To ensure the bond quality of the precured frames to the panel, tolerance stacking control must be maintained at the frame bond interface as shown in Figure 5 11 The preliminary criteria of less than 0.010" gap condition between the precured frame bottom flange and inner skin was established based on risk of void formation during cure. The tolerance stacking of ±0 010' would only be required immediately below the frame web area since the flexibility of the frame flanges would compensate for increased tolerance stacking. The tolerance criteria for the panel surface would be defined as ±0.010 for 3% of the panel surface area at the bond location and ± 0.030' allowance for the remaining 97% surface area resulting in cost savings due to higher core machining rates with less required accuracy and inspection Preliminary stress analysis inticated that the effect of the ±0.030" variation in sandwich thickness would not impact structural performance The OML tooling approach requires that the facesheets and core are forced to fit exactly between the frame and tool contour. In order for this to occur, sacrificial resin flow into and out of the facesheet/frame interface region is required. The risks of tolerance

stacking can further be minimized by using an IML tooling approach which forces the variations to the OML surface

The potential exists for further reducing tolerance accumulation through compensation methods Such methods include the use of tool and frame inspection data to modify the NC machining program to fabricate a contour core that is adjusted for these variations Therefore any variation in the frame or tool contour is compensated by the core machining program. The risk of this method is the management of individual frame and cure tool contour data In order to machine the proper core contour, the frame contour and location of each frame relative to the cure tool must be defined This approach may not be necessary since variations in the facesheet thicknesses can be compensated for by minimal sacrificial resin flow during cure leaving a remaining ±0 010' tolerance accumulation to be compensated for

Stiffener tolerance control

Additional residual stresses result from panel shrinkage which also influences locational accuracy of cocured stringer and cobonded frames Panel shrinkage for simple laminate skins can be calculated from ply orientation, resin and fiber properties and characterization of resin degree of cure based on cure processing conditions Typically, when the cure temperature is higher than the Tg, little residual stresses occur because the resin is still plastic Higher stresses result where Tg rises above cure early in the cure cycle The Fiberite 938 resin system used for the crown panels has a lower temperature where vetrification occurs relative to the Hercules 8552 resin system [29] Vetrification is the point where the Tg rises above cure temperature and resin no longer behaves plastically. The effect of this difference can be seen in the comparison of the panel shrinkage between the skin-stringer and sandwich configurations as shown in Figure 6-9

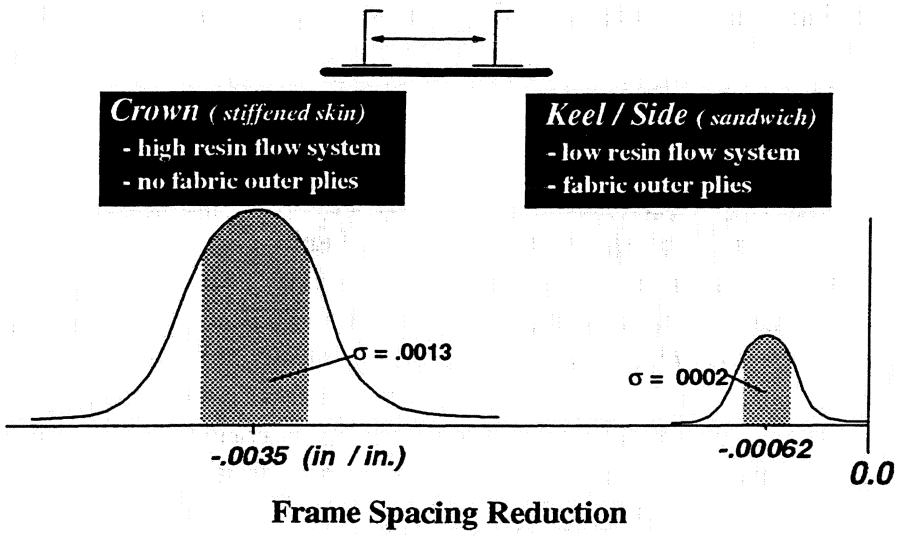

Figure 6-9. Frame Spacing Shrinkage- Comparision of Stiffened Skin Panels (Crown) and Sandwich Panels (Keel, Side)

The sandwich panel shrinkage was about one sixth of the crown panels which is due to a combination of chemical resin shrinkage, laminate CTE, and out-of-plane fiber distortion The amount of resin and thermal shrinkage accounted for only half of the skin-stringer panel shrinkage The remainder was due to out-of plane fiber distortion caused by sinkage of the precured frame into the skin during cure The amount of fiber distortion for the sandwich structure in most cases was not measurable This large difference in fiber distortion is related to the use of a low flow resin system and a fabric outer ply on each surface The woven architecture of fabric prevents local frame depressions thus minimizing the fiber distortion is subsequent plies The Hercules 8552 resin system is considered a low flow system requiring significant pressure to force local resin flow. The effects of frame movement during cure induce in plane fiber waviness near the frame to skin bond as shown in Figure 6-10

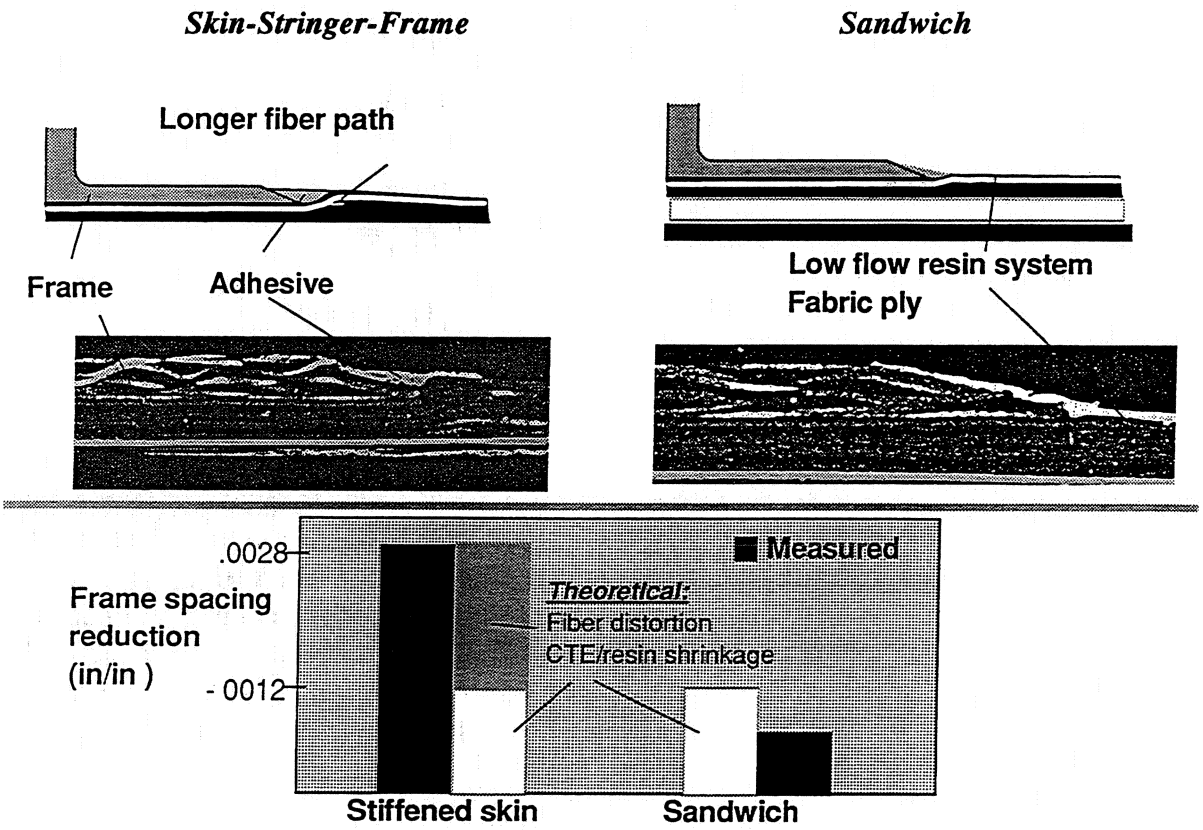

Figure 6-10. Fiber Distortion Due to Panel Shrinkage and Frame Depression

Effects of Defects

Although the effects of such defects are currently not known evaluation of various load cases has shown that stresses can be very significant near the window and passenger door cutout regions as shown in Figure 6 11 The inability to transfer load efficiency through these areas in the presence of defects, requires additional analysis and testing to determine the effects on structural performance Although the defects may exist for both skin stringer and sandwich design the effect of defects will vary since load distribution and transfer is significantly different

structural performance which can require costly tooling and process modifications unless proven otherwise. The use of large scale demonstration panels not only becomes important for manufacturing scale-up efforts, but early analysis of such defects can be evaluated to ensure that optimized designs for cost are reliable Process anomalies in noncritical areas may be allowed without process, material or tooling modifications

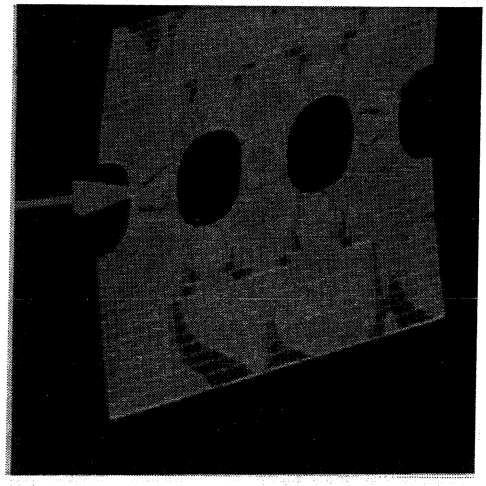

Figure 6-11. Stress Analysis of Side Quadrant Panel

6.2 Fuselage Assembly

A concept for assembly of a composite barrel section is shown in Figure 6 12. The keel quadrant panel size was initially designed so that cargo floor beams and stanchions were installed after the side and keel panels were joined. Recent design modifications of the keel quadrant panel allow for the cargo floor assembly to be built up on the keel quadrant panel prior to side panel attachment. The preassembled passenger floor grid assembly is used as a tooling fixture to attach the side panels to the keel panel. The crown panel is then attached to the side panels followed by interior and system attachments The Section 46 barrel is joined to the sections forward and aft through a butt-splice. Titanium eddie-bolts Hi-loks, or Lockbolts are used throughout for mechanical fastening of the assembly.

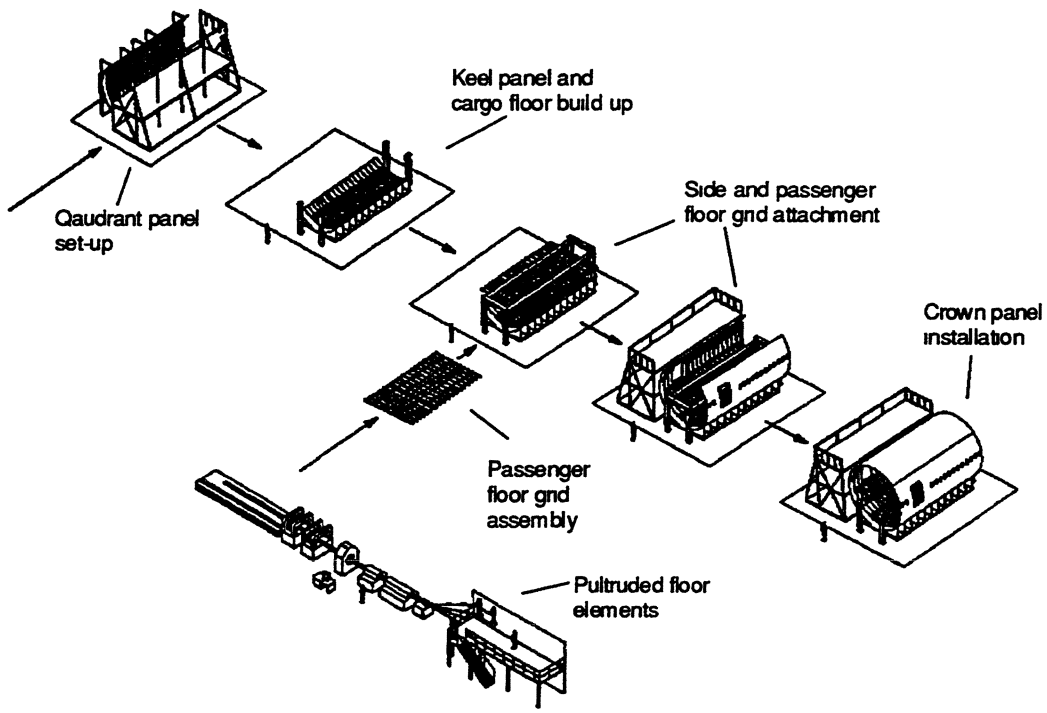

Figure 6 12 Barrel Assembly

The circumferential frames are spliced between panels with braided/RTM Z sections using mechanical fasteners and shimming where necessary (Figure 6 13) Pultruded C section passenger floor beams Z section passenger floor beam stanchions are fabricated by hot drape forming to accommodate a joggle in the web cargo floor beams floor beam splices and left and right hand overwing longeron extensions are installed as shown in Figures 6 14 through 6 16

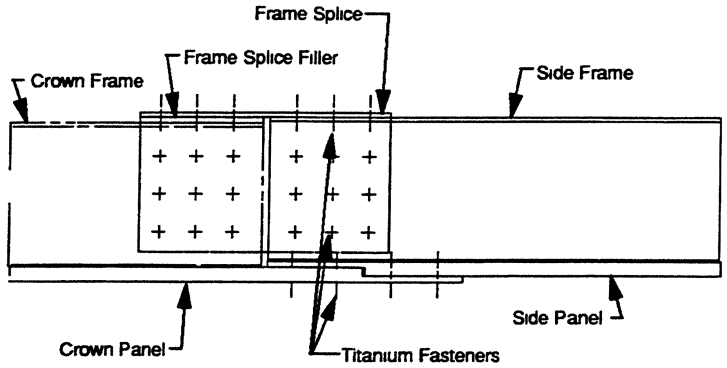

Figure 6 13 Longitudinal Splice

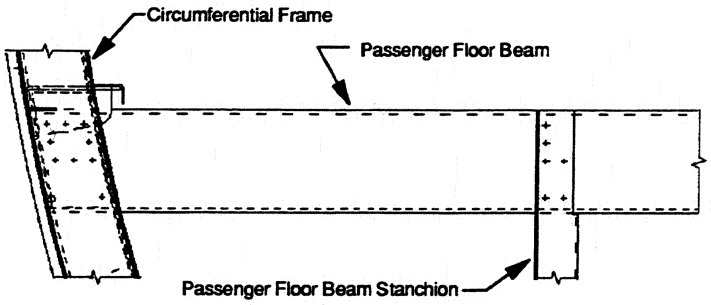

Figure 6-14. Passenger Floor Beam and Stanchion Installation

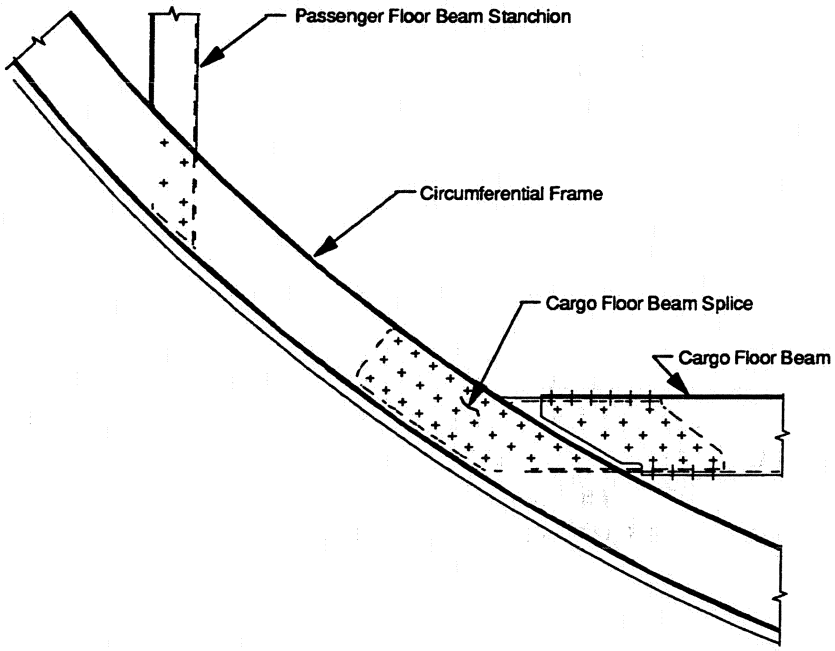

Figure 6 15. Cargo Floor Beam and Passenger Floor Stanchion Installation

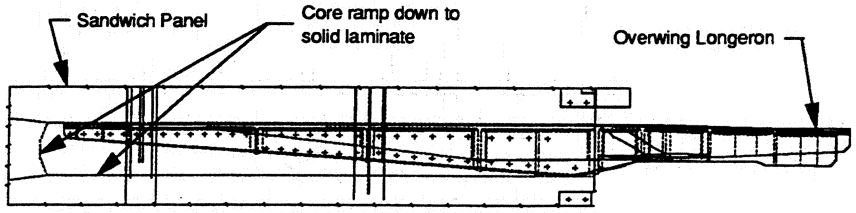

Figure 6-16. Overwing Longeron Installation

The side panels are attached to the keel and crown panels through mechanically fastened lap splice with solid and liquid shimming used to accommodate fit-up gaps Shims are typically used for gap conditions in excess of 0 008". Gap conditions in excess of 0 060" would require process or tooling modifications to reduce gap conditions. A double, multi task-head drills the

hole then inserts and tightens the fastener through the two overlapping skins and stringer flange Cycle time may be decreased by multiple heads working simultaneously The heads use the attached blade stringer for positioning along the length of the longitudinal splice member.

As discussed in Section 6 1, costs associated with barrel assembly are due to the number of assembled panels and dimensional control of panel contour and stiffener location One assembly approach is for a skin-stringer panel with bolted frames, which would compensate for tolerance accumulation of the side and keel panels

The number of quadrant panels could be minimized to three panels where the maximum panel size would be approximate 15% larger than the largest current quadrant panel design Costs savings would be realized due to a 25% reduction in longitudinal splices, and the number of cure tools needed for rate production. This approach would likely require the crown panel to be a sandwich design This commonality between all panels would further increase the cost benefits by using similar processes and tools The reduction of all longitudinal splices and the need to compensate for tolerance accumulation is eliminated if manufacturing processes for barrel fabrication are achieved as shown in Figure 6-17 The length of the one piece barrel section may be limited due to the AFP efficiency and panel bond assembly. Material out-time, segmented full-barrel cure tooling and barrel warpage are some of the critical risks associated with full scale barrel fabrication

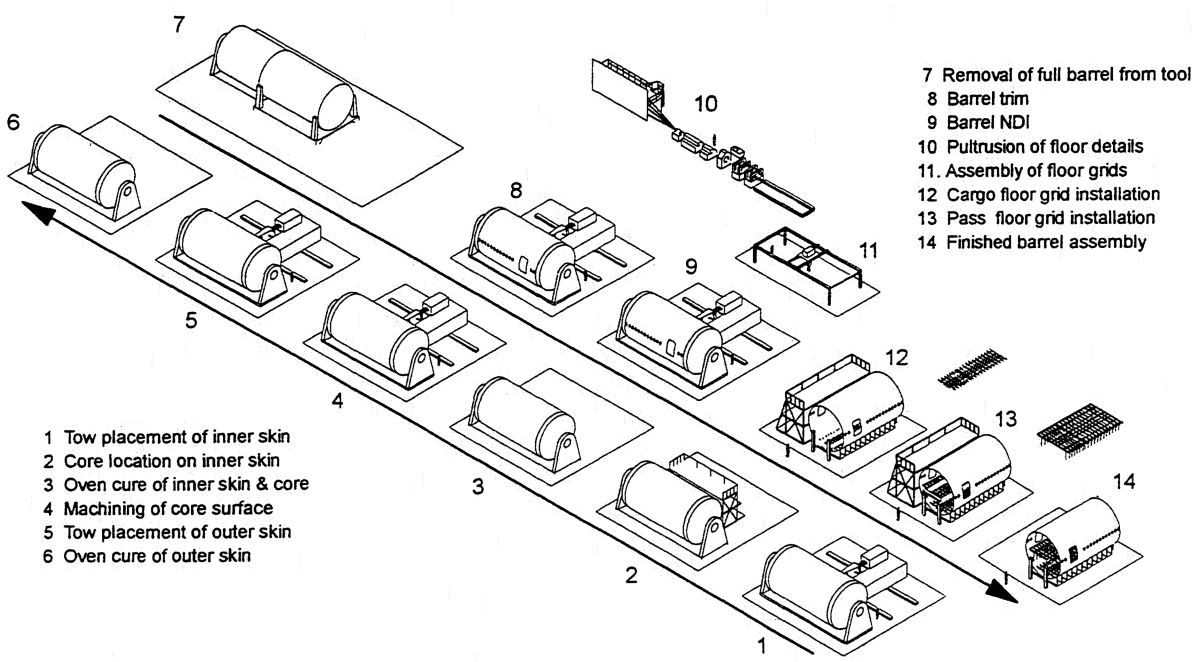

Figure 6-17 Configurations of Barrel Fabrication and Assembly

7.0 CONCLUDING REMARKS

7 1 Development Activities and Lessons Learned

Manufacturing demonstrations where fabricated for each of the fuselage quadrant panels to address scale-up issues and verify technologies required for full scale production Technologies pursued under this program were limited to "Enabling Manufacturing Technologies" critical for achieving the cost and weight goals of the ATCAS program The manufacturing development efforts focused on optimization of

Minimize	***Maximize.***
Material cost / scrap	Tolerance control
Part complexity	Part commonalty
Complex bonded interfaces	Automation
Shimming	Tooling simplicity
Touch labor	Material performance
Inspection requirements	Quality-process control
	Process efficiency

Optimal cost conditions for fuselage assembly requires elimination of shims, minimal part assemblies and no load assembly processes. These conditions can only be met if the quadrant panel out-of-tolerance conditions are minimized or compensated for without structural performance loss or significant cost Efforts related to process control and predictive warpage/tolerance models were pursued under the NASA ATCAS program using material and manufacturing databases developed from coupon and subscale (7' x 10') manufacturing demonstrations. Material forms, panel configuration fabrication processes, and tool designs were evaluated to determine key process/design characteristics for controlling assembly out of-tolerance conditions Table 7 1 is a summary of the manufacturing processes and materials evaluated through hardware demonstrations and testing This summary includes an assessment of the potential for achieving tolerance control for barrel assembly.

Table 7-1 Manufacturing and Design Variables

	Manufacture and Material Variations	*Assessment of Tolerance Control for Barrel Assembly*
Processes	Automated Fiber Placement (Skins stringers) Resin Transfer Molding (close-outs frames splices) Braiding / Textile Preforms (close-outs frames splices) Drape Forming (stringers, skins) Cocuring / Cobonding (frames stringers skins) Core Forming / Stabilizing / Machining Autoclave Cure 3-D Reinforcement (Z-pins)	Processes which can be characterized for process control methods can significantly lower costs through reduction in (1) part-to-part variations, (2) shimming and associated touch labor for full barrel assembly and (3) reduced inspection costs.
Materials	Tow / tape / fabric High / low flow resin (Fiberite 938 / Hercules 8552-1) Intra-ply-hybrid (AS4 / S2) Untoughened / toughened (Fiberite 938 / Hercules 8552 1)	Low-flow systems (1) improved skin thickness variation, (2) were used for laminate and sandwich configurations (3) minimized skin thinning due to cobonded frames (4) simplified cure tooling that is typically designed for controlling resin flow The use of hot melt process for tow impregnation improved AFP process efficiency due to significant control of tow width tolerances
Tooling	OML cure tool (Invar -36) Flexible IML (composite/ flouroelastomer) IML cure tool (composite) RTM (Invar-36/Steel/Al.) AFP Tooling Close-out element tooling	Tool design must (1) consider heat transfer requirements for uniform panel cure to control warpage, (2) accommodate downstream design changes (3) use the proper material for production durability and reduced tool cleaning and preparation and (4) compensate for tolerance accumulation due to dimensional variation of material systems and precured assembly elements such as frames core, and edge close-outs

The manufacturing development activities for the crown keel, and side quadrants are shown in Table 7-2. These development activities represent the concerted effort of the DBT to optimize the quadrant designs for cost and weight Universities and subcontractors were included in various development activities where appropriate

Table 7-2 Manufacturing Development Activities

Structure	*Development Activities / Accomplishments*
Crown 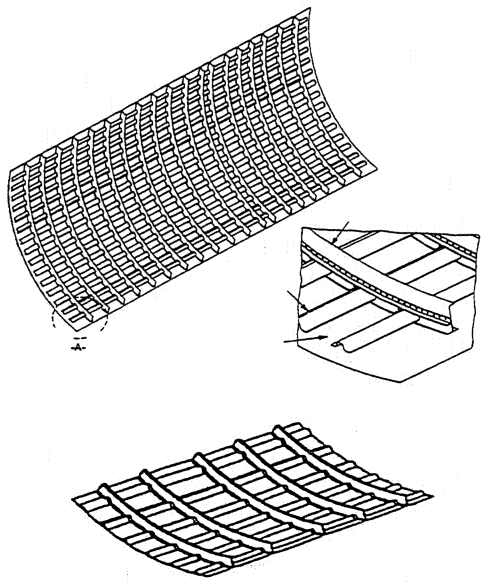	***Large-scale manufacturing demonstrations with hard OML and flexible IML tooling (curved - 7'x10 , 6'x6 ; flat - 4 x14)*** • Optimization of panel fabrication through repetitious demonstrations (bonded and fastened frame designs) • Efficient hat stringer drape forming • Development of RTM/braided circumferential frames with tolerance control for cobonding (Boeing / Fiber Innovations) • Joint Hercules / Boeing AFP studies for curved panels including hybrid material forms • Manufacturing tolerance database for a range of design variables • Flexible IML tooling for cobonding precured frames and cocuring stringers to the skin in one cure cycle (cauls stringer mandrels and frame-stringer intersection tooling Patent nos. 5 387,098 and 5,242,523) • Time studies of manufacturing demonstrations • Identification of process anomalies • Manufacturing preplans used for cost optimization • Bolt-on repair studies with American Airlines
Keel 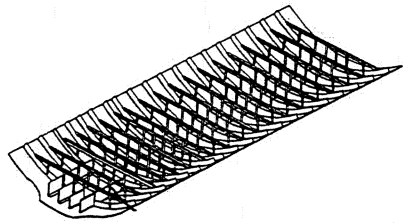 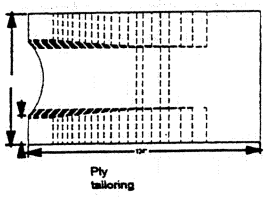 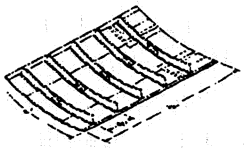	***Large-scale manufacturing demonstrations with hard OML and flexible IML tooling for forward, mid, and aft keel sections (curved 7 x10 , 3'x6'; flat - 4'x8')*** • Optimization of panel fabrication through repetitious demonstrations (varying and constant radius IML contour) • Joint Hercules / Boeing AFP studies for highly tailored contoured skins • Development of RTM/Braided circumferential frames with PR500 resin system and 2 D 3-D textile preforms (Boeing / Fiber Innovations / Lockheed) • Cure cycle optimization suitable for thick laminate and sandwich simultaneous cure • Development of machining, stabilizing and forming methods for core materials (HRP and Korex foam filled cores) • Manufacturing tolerance database for a range of design variables (panel warpage panel assembly tolerance accumulation, etc) • Development of sandwich edge close-outs (rampdown solid, braided/RTM) • Time studies of manufacturing demonstrations • Identification of process anomalies • Manufacturing preplans used for cost optimization • Permanent and temporary repair demonstrations

Table 7-2 Manufacturing Development Activities (cont d)

Structure	***Development Activities / Accomplishments***
Side 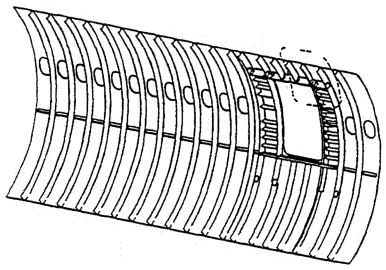 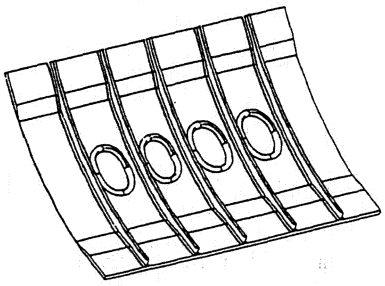	***Large-scale manufacturing demonstrations with Hard OML and IML tooling for window-belt region (curved 7'x10, flat - 4'x8')*** • Optimization of panel fabrication through repetitious demonstrations on hard IML (Lockheed) and OML (Boeing) cure tooling • Joint Hercules / Boeing / Lockheed AFP studies for full-depth and rampdown close-out designs at the window-belt region AFP process on highly contoured core material. • Development of RTM/Braided circumferential frames for window belt contour regions window frames (Lockheed / Atkins & Pierce) and passenger door reinforcement (Northrop) and 2-D & 3-D textile preforms (Boeing / Fiber Innovations / Lockheed) • Development of machining stabilizing, and forming methods for core materials (HRP and Korex foam filled cores) • Manufacturing tolerance database for a range of design variables (panel warpage panel assembly tolerance, frame spacing etc) • Development of window edge close-outs (rampdown solid, braided/RTM) • Time studies of manufacturing demonstrations • Identification of process anomalies • Manufacturing preplans used for cost optimization
Full Barrel 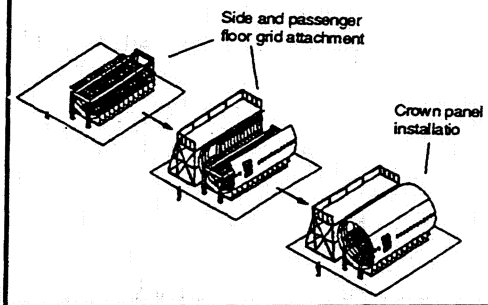	***Preplans for quadrant fuselage assembly*** • Assembly preplans and factory lay-out • Frame splice demonstrations • Potential compensation methods for tolerance accumulation during panel assembly • Warpage analysis of quadrant panels (simulated as cured configured panels, including edge effects and cutouts to achieve attachment and splice pay-off)

The manufacturing process for fabricating stiffened skin and sandwich primary structure was developed at a significant scale to evaluate process anomalies associated with large-scale panel fabrication The verification of models used to predict out-of-tolerance conditions of full scale fuselage structure required multiple demonstration panels to understand part to-part variations and the magnitude of associated process anomalies Results from these models suggest mismatches in CTE between tools, laminates, core details, and cobonded precured details are significant contributors to panel warpage and shrinkage and should be evaluated early in the design phase

The warpage of the configured sandwich manufacturing demonstration panels suggest that minimal if any compensation methods would be required to correct for out-of-tolerance conditions for barrel assembly Verification would require multiple full scale demonstrations.

The structural performance of the individual quadrant panels relies on the bond quality of the cocured or cobonded stiffening elements The use of IML tooling for sandwich structure with cobonded frames has shown evidence of reducing the risk of void formation in the frame skin bondline If panel shrinkage cannot be minimized and controlled OML tooling may have lower manufacturing risks than an IML tooling approach The IML tooling approach is also beneficial for the development of a one-piece fuselage barrel that could minimize costs due to elimination of splices tooling, and panel assembly labor.

Some of the lessons learned during the ATCAS program for developing manufacturing technologies and design configurations for optimized weight and cost are summarized as follows

1) A significant level of detail in the definition of manufacturing process steps and design variables is critical for cost optimization

2) Once initial tooling concepts have been demonstrated, large scale demonstrations of significant size are necessary to evaluate part-to-part variations, parameters that effect part warpage and the effects of defects through large scale testing Fabrication of large-scale demonstrations panels that represent full size configured panels and details should be done early in the process development phase

3) Understand the key characteristics of the individual manufacturing and assembly processing that require process control to ensure structural performance Avoid the use of pristine test coupons that do not truly represent process and material variations

4) Focus on methods for low cost production with continual cost assessments and factory flow simulations through the manufacturing development phase.

5) The cost models database should include process limitations and associated tolerances to ensure compatibility with structural performance requirements

6) Design and manufacture is the responsibility of all DBT members

7.2 Future Development Efforts

Manufacturing developments efforts for crown keel and side quadrant panels focused on several cost-effective manufacturing technologies and producible designs Although the Phase A & B ATCAS program developed a manufacture, design material and structural database, additional significant efforts for verifying low cost full-scale fuselage fabrication is required Following is a list of proposed activities that were not completed during the ATCAS program

1) Full-scale demonstrations with design details (panel size = 20' x 30)

2) Model development and calibration: warpage assembly tolerance, structural performance, cure models Verification of manufacturing processes in cost models and associated tolerance databases.

3) Integration of tolerance assessment model, design model (COSTADE PCAD) and FEM

4) Cost-effective manufacturing process for textile preforms with significant ply tailoring and inspection standards.

5) Integration of systems and associated attachments.

6) Tooling concept development and verification of full barrel fabrication process

7) Optimized methods for stiffener cobonding preparation

8) Full-size core blanket demonstrations (forming machining, stabilizing, handling)

9) Process controls to minimize inspection costs and manufacturing anomalies

10) Optimized processes for permanent and temporary repairs

11) Pultrusion tooling and process development.

8.0 REFERENCES

1 Ilcewicz L et al "Advanced Technology Composite Fuselage Program Overview, NASA CR 4734 1997

2 Avery W , et al 'Design and Structural Development of a Composite Fuselage Keel Panel, Fifth NASA Advanced Composite Technology Conference, NASA CP 3294 1994 pp 463-495.

3 Ilcewicz, L. et al: "Application of a Design-Build Team Approach to Low Cost and Weight Composite Fuselage Structure " NASA CR-4418 December 1991

4 Ilcewicz L B Smith, P J., Horton R. E 'Advanced Composite Fuselage Technology' Third NASA Advanced Composites Technology Conference NASA CP-3178, 1992

5. Metschan S. L , Willden, K S Sharpless, G. C , Andelman R M 'Cost Model Relationships Between Textile Manufacturing Processes and Design Details for Transport Fuselage Elements", Third NASA Advanced Composites Technology Conference NASA CP 3178 1992

6 Metschan, S L , Mabson, G. E., Swanson, G D , Gessel, M H , Humphrey, R J., Tervo, D. K , "Integration of Advanced Composite Manufacturing Trials into a Design/Cost Database" Fourth NASA/DOD Advanced Composites Technology Conference, NASA CP-3229, 1993

7 Willden, K S., Metschan, S L Grant, C. G., Brown T., 'Composite Fuselage Crown Panel Manufacturing Technology", Second NASA Advanced Composites Technology Conference, NASA CP-3154, November, 1991.

8 Scholz, D B., et al, 'Advanced Technology Composite Fuselage-Materials and Processes' , NASA CR-4731, 1997.

9 Walker, T H.; et. al.: "Tension Fracture of Laminates for Transport Fuselage, Part 1 Material Screening, Second NASA Advanced Composites Technology Conference, NASA CP-3154, June 1992.

10 Walker, T , et al: ' Damage Tolerance of Composite Fuselage Structures,' Sixth NASA Advanced Composite Technology Conference NASA CP-3326, 1995

11. Mabson, G. E. Flynn, B W., Swanson, G. D , Lundquist, R C. Rupp P L , 'Dimensional Stability of Curved Panels with Cocured Stiffeners and Cobonded Frames' Third NASA Advanced Composites Technology Conference, NASA CP-3178 January 1993

12 Fedro, M J , K. S Willden "Characterization and Manufacture of Braided Composites for Large Commercial Aircraft Structures," Second NASA Advanced Composites Technology Conference, NASA CP-3154, June 1992.

13 Willden, K. S · et. al. 'Manufacturing Scale Up of Composite Fuselage Crown Panels Third NASA Advanced Composites Technology Conference NASA CP 3178 January 1993

14 Willden K. Gessel, M , Davies, T Mabson, G , Grant C , and Brown T Fuselage Crown Manufacturing Technology Verification Fourth NASA/DOD Advanced Composite Technology Conference NASA CP-3229, 1993, pp 95-123

15 Willden K , Stawski, S , Harris C. Hafenrichter J Grant C , Brown T and Skolnik D . Composite Fuselage Manufacturing Development, Fifth NASA/DOD Advanced Composite Technology Conference NASA CP-3294 1995 pp. 237-255.

16 Walker, T., Ilcewicz L , Bodine, J., Murphy, D , and Dost, E Benchmark Panels NASA CR 194969 Aug., 1994.

17 Walker T. H et. al "Advanced Technology Composite Fuselage - Structural Performance, NASA CR-4732 1997

18 Adams, L.T. Barrie R E Leger, C A , Skolnik, D. Z , "Braided/RTM Fuselage Frame Development", Fifth NASA/DOD/Advanced Composites Technology Conference, NASA CP-3294 1995.

19 Skolnik, D , Shukla J. Harris C., and Wheeler, M Fabrication and Manufacturing Development of Composite Fuselage Window-Belt Structure, Sixth NASA/DOD/ARPA Advanced Composite Technology Conference, NASA CP 3326, 1996.

20. Walker, T. H.; et al. 'Tension Fracture of Laminates for Transport Fuselage Part 2: Large Notches, Third NASA Advanced Composites Technology Conference NASA CP 3178, January 1993.

21. Dopker, B , Ilcewicz, L., Murphy, D., and Biornstad R.· Composite Structural Analyses Supporting Affordable Manufacturing and Maintenance, Sixth NASA/DOD/ARPA Advanced Composite Technology Conference, NASA CP-3326, 1996.

22 Nelson, R. H. Cairns, D S , Prediction of Dimensional Changes in Composite Laminates During Cure ', 34th International SAMPE Symposium, May 8 11, 1989, pp 2397-2410.

23 Gessel, M. H., Willden, K. S., Benson, V. M Benson, Grant, C G., ' Manufacturing Development for Advanced Fuselage Keel Structure' , Tenth DOD/NASA/FAA Conference on Fibrous Composites in Structural Design, NAWCADWAR 94096 60, April, 1994.

24 Harris, C , Willden, K , Matetich, R , Stawski, S. Harris, T and Skolnik D Manufacturing Development of Composite Fuselage Panels. Sixth NASA/DOD/ARPA Advanced Composite Technology Conference, NASA CP 3326 1996.

25 Flynn, B W. et. al : ' Global Cost and Weight Evaluation of Fuselage Keel Design Concepts,' NASA CR-4541 December 1993

26 Hanson, C T et al. ' Design Integration of a Composite Aft Fuselage Barrel Section, Sixth NASA/Dod Advanced Composites Technology Conference, NASA CP-3326 1996

27 Saatchi, H "Low Cost Thermoplastic Composite Materials Manufacturing" Thermoplastic V Materials and Fabrications for Low Cost Composite Structure, SAMPE, Los Angeles Chapter Seminar August, 1989

28 Saatchi H. et.al. ' In-situ Processing Methods for Composite Fuselage Sandwich Structures Third NASA Advanced Composites Technology Conference, NASA CP-3178, January 1993

29. Scholz D B et. al 'Material and Processing Developments for Composite Fuselage Sandwich Structure, ' Fifth NASA/DOD Advanced Composites Technology Conference NASA CP-3294, May 1995.

30 Polland, D Walker, T. Smith P , Griess K , Dopker, B and Russell S.: Structural Development of Composite Fuselage Cutouts Windowbelt and Door Reinforcements, Sixth NASA/DOD/ARPA Advanced Composite Technology Conference, NASA CP-3326, 1996

31 Ilcewicz L , et al, ' Cost Optimization Software for Transport Aircraft Design Evaluation (COSTADE) Overview' NASA CR-4736, 1996.

32 Skolnik D Z., et al, ' Advanced Composite Structural Concepts and Materials Technologies for Primary Aircraft Structures Design, Analysis, Fabrication, and Test ', NASA CR-4726, 1996.

33 Polland D R ; et al. "Global Cost and Weight Evaluation of Fuselage Side Panel Design Concepts,' NASA CR-4730 , 1997

34 Flynn, B W., et. al, 'Advanced Technology Composite Fuselage Maintenance, ' NASA CR-4733 1997

35 Shukla, J G , et al, Advanced Composite Structural Concepts and Materials Technologies for Primary Aircraft Structures Textile Preform Development and Processing ', NASA CR 4728, 1996

36 Evans, D O., ' Productivity Factors for Fiber Placement' , Composites 96 Manufacturing and Tooling Conference January 1996

37 Ley, R. P., Husmann, C H , Russell S G , ' Manufacturing Development of Composite Fuselage Cutout Reinforcement Structure Final Report-Boeing Purchase Contract HY7410 May, 1996

APPENDIX A

Design Families

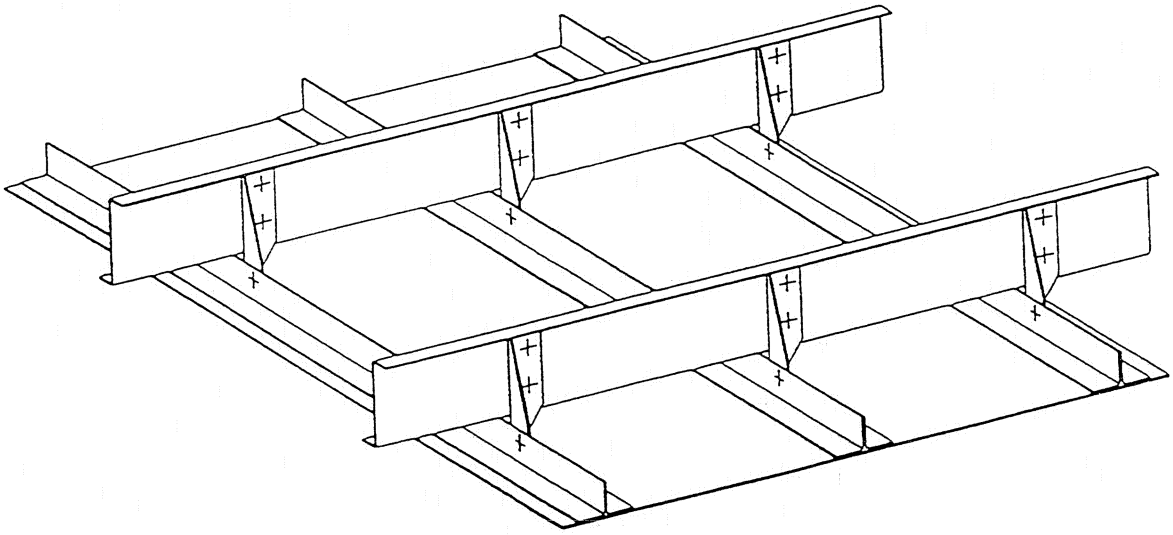

Family A: Skin-Stringer-Frame (Mechanically Fastened Stringers and Frames)

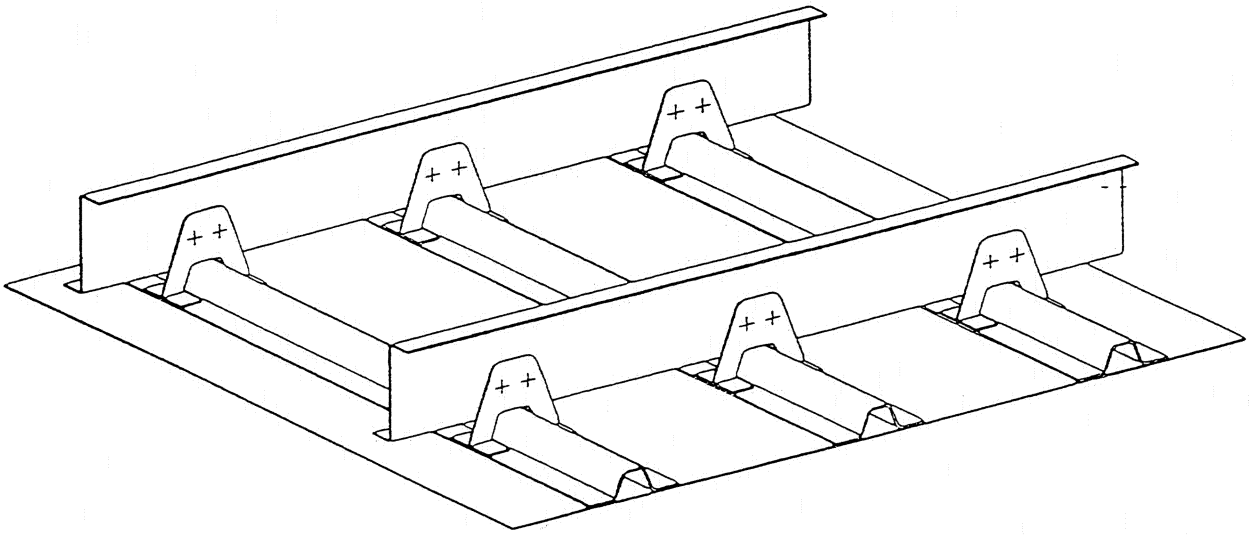

Family B: Skin-Stringer Frame (Bonded Stringers)

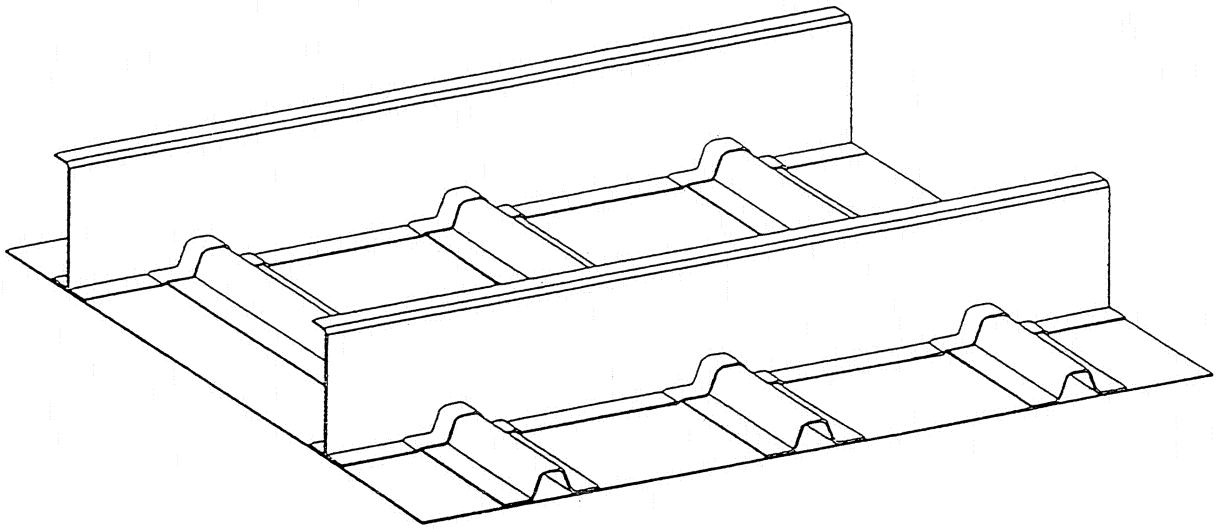

Family C: Skin Stringer-Frame (Bonded Stringers and Frames)

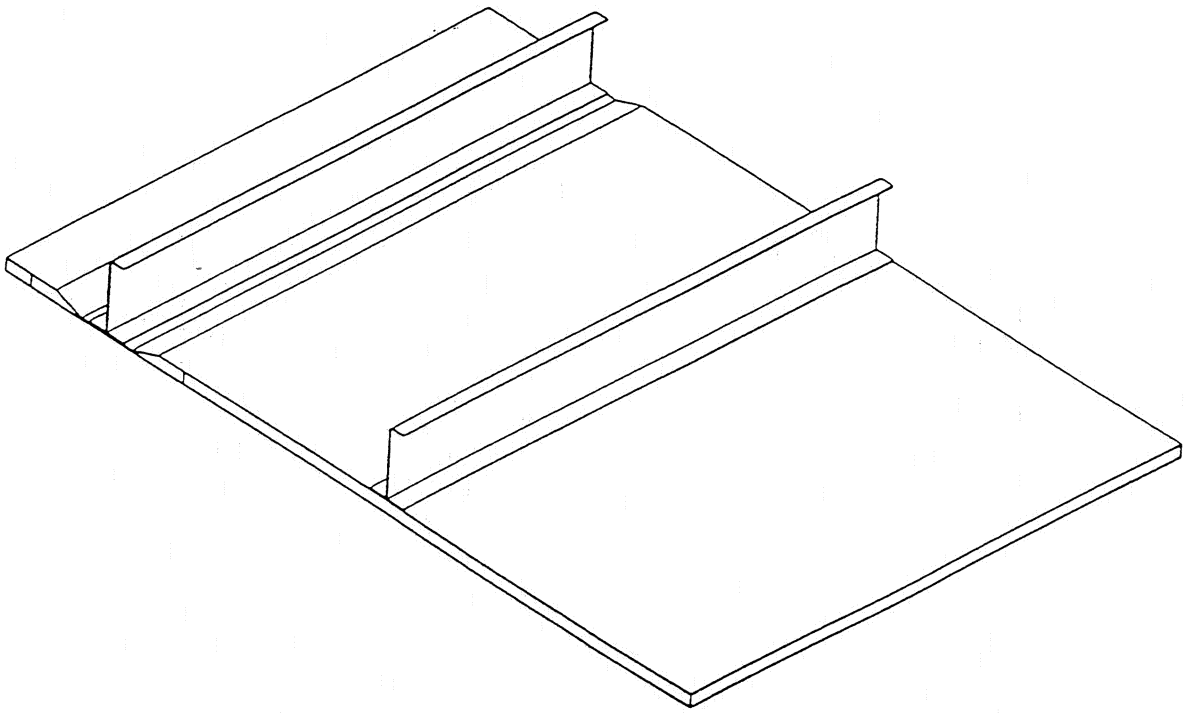

Family D Sandwich

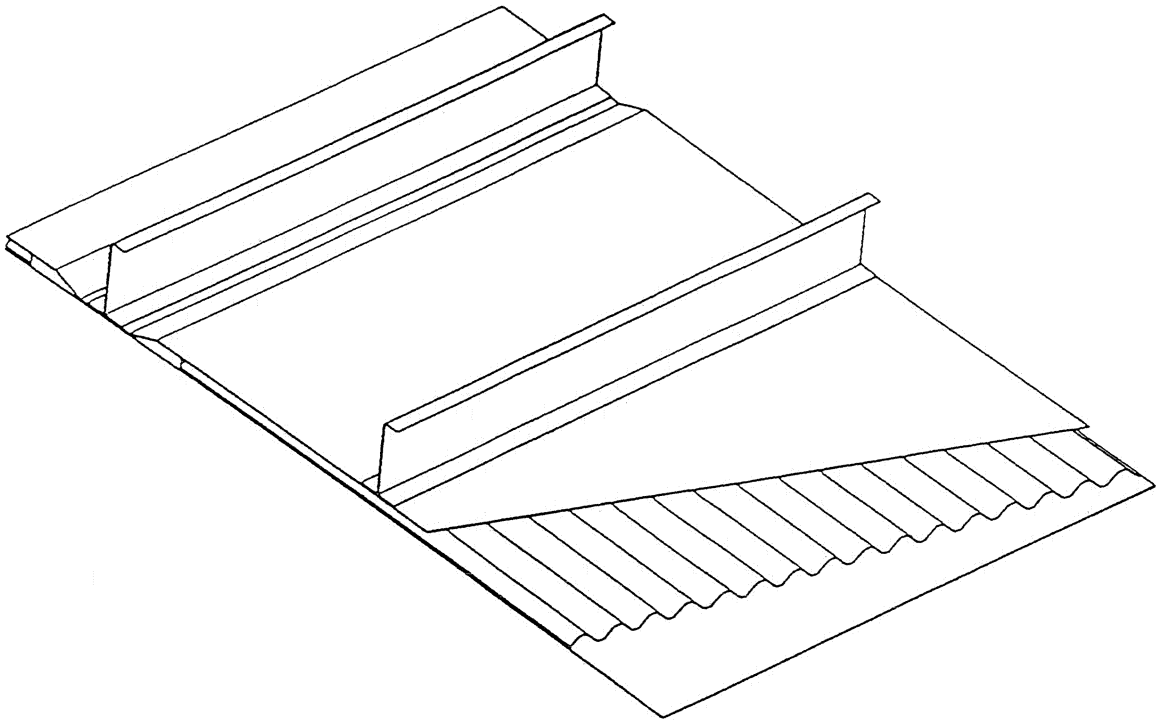

Family E: Corrugated

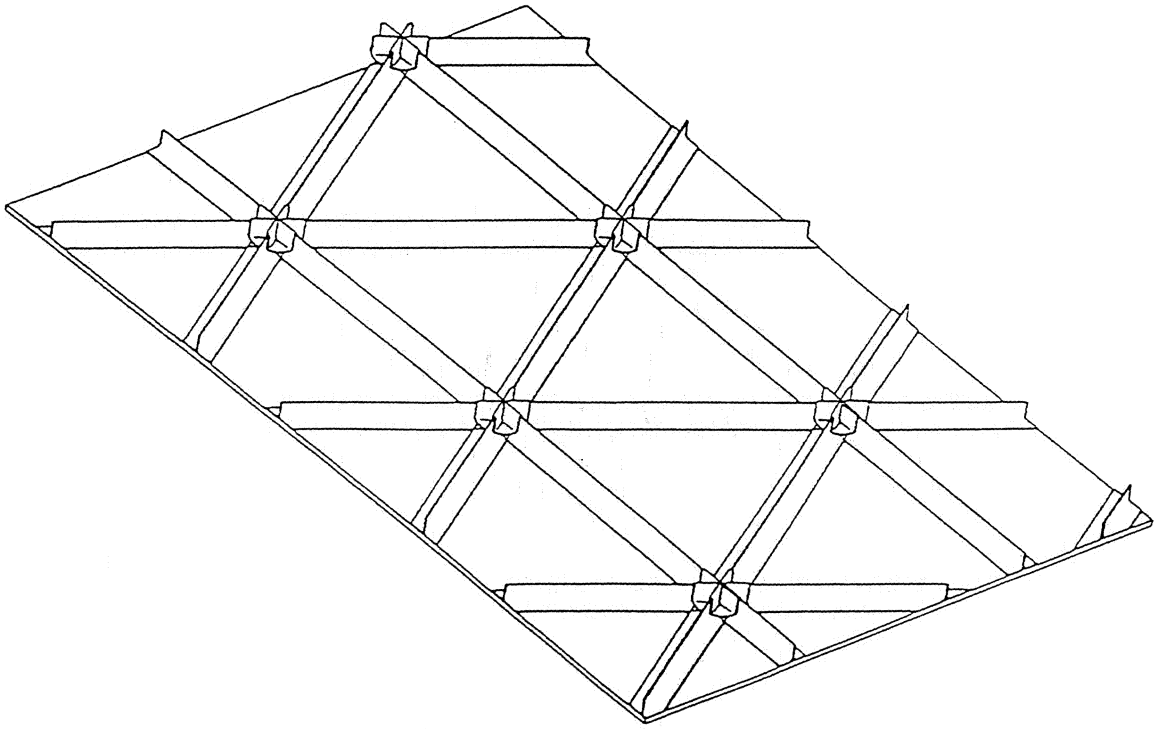

Family F Geodesic

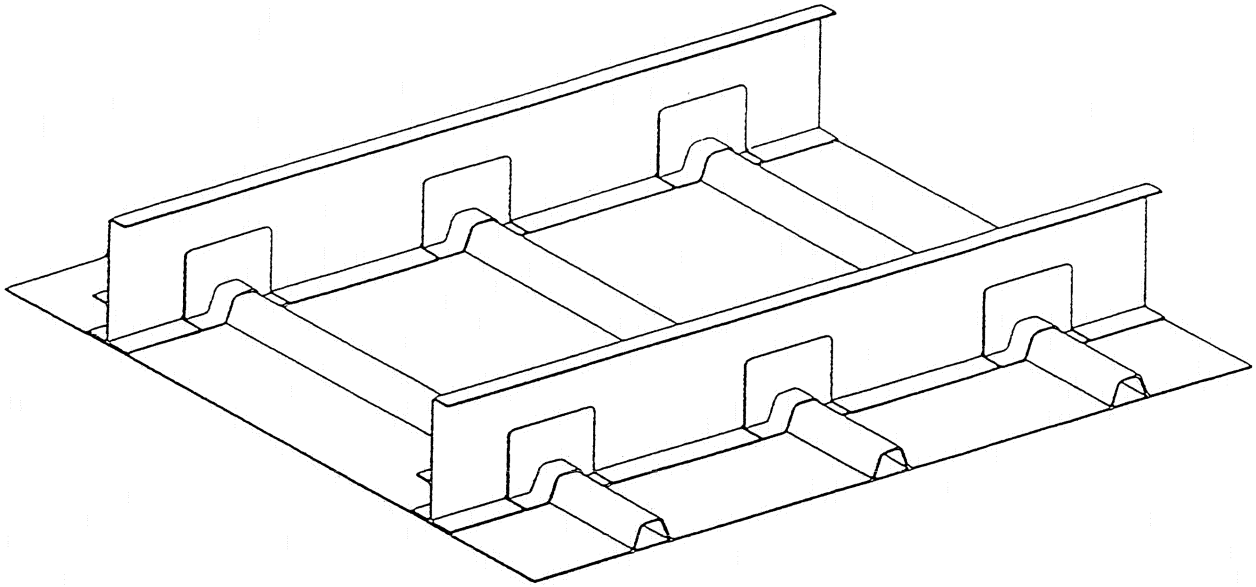

Family G. Integrally Stiffened Skins

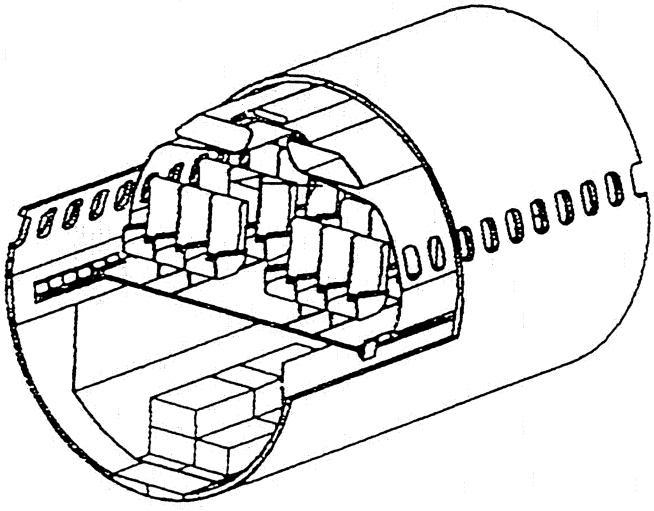

Family H: Continuous 360°

APPENDIX B

Through-Thickness Reinforcement (Z-Pins)

FINAL REPORT

1 Introduction

The primary goal of this program is to investigate the use of Foster Miller technology to reinforce bondlines between stingers and skins Specific tooling for Boeing s particular applications does not allow the use of typical z fiber processing procedures The focus of this program is to develop a process to insert z fibers in a hot debulk cycle This will allow the residual foam to be removed from the prepreg and then cured with existing tooling

To accomplish the program foam carriers must be investigated which give adequate support to the z fibers during the Boeing specified processing limits of no more than 150 psi and 150°F This program investigates various foam materials debulk cycles vacuum bag techniques and z fiber spike diameters and outlines recommended z fiber preform details and processing procedures The final step of the program will fabricate a z fiber preform for processing at Boeing Commercial Airplane facilities

2 Foam Characteristics

Four types of foam were tested in compression at 150°F to determine basic characteristics These foams include Divinycell H45 Divinycell H60 Rohacell 31IG and Rohacell 51IG The Divinycell foam is polyvinyl based material The Rohacell material is a polymethacrylimide foam and is generally more stable at high temperatures than Divinycell Figure 1 illustrates typical load deflection curves developed for both types of foam at 150°F Physical and mechanical properties obtained for these foams at this temperature has been summarized in Table 1

3 Insertion Trials

Two foams with different characteristics were selected for insertion trials The Divinycell H45 foam collapses nearly 95 percent where as the Rohacell 51IG foam exhibits higher stiffness and may give better support to the pins during insertion A cure cycle was established Figure 2 to quickly raise the laminate temperature to 150°F with no overshoot and to minimize the dwell time at this temperature A typical vacuum bag schematic for z fiber processing is illustrated in Figure 3

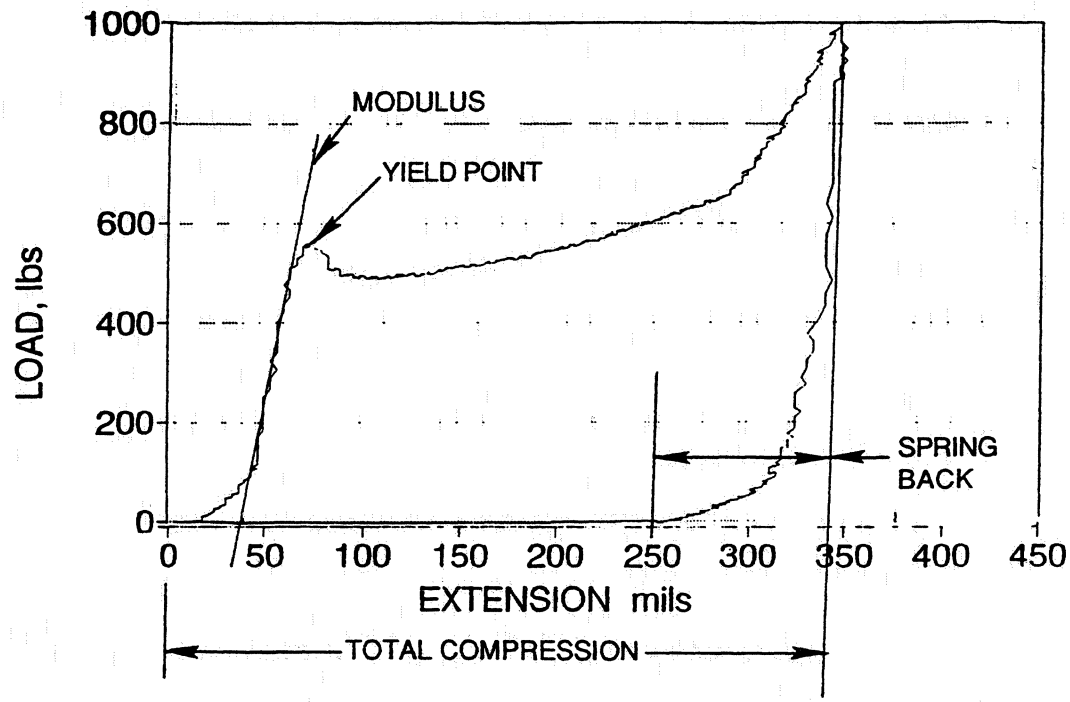

a) Compression Test for Rohacell 51IG

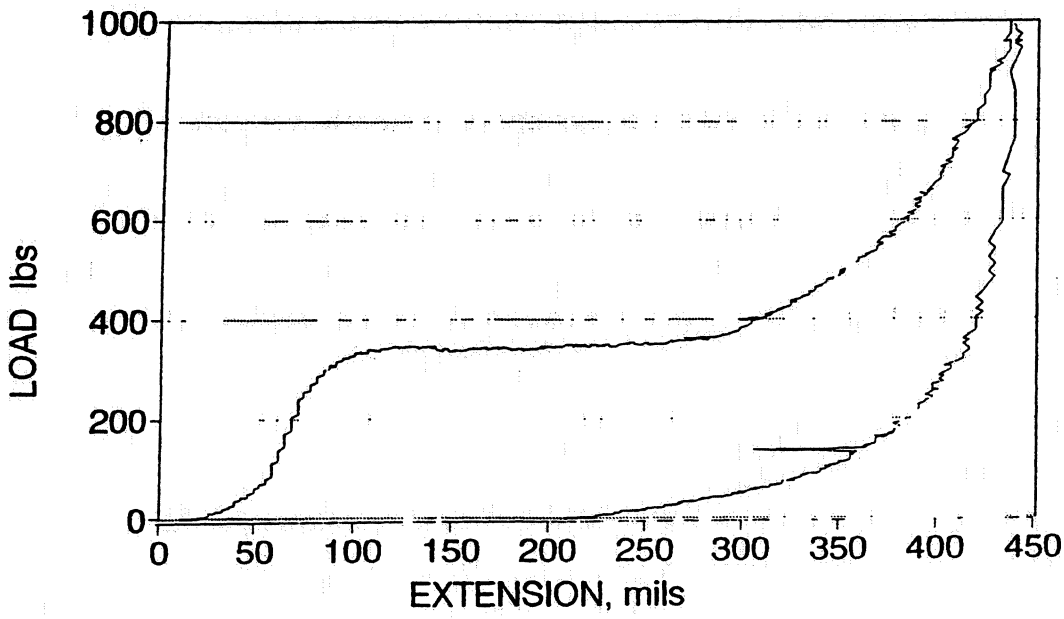

b) Compression Test for Divinycell H45

Figure 1. Load Deflection Curve

Table 1 Properties of Candidate Foams

Material	Density (PCF)	Total Compression (/)	Spring Back (/)	Yield Strength (psi)	Modulus to Yield (psi)
Divinycell H45	3 0	92	51	42	332
Divinycell H60	4 0	94	57	37	336
Rohacell 31IG	2 0	99	15	32	295
Rohacell 51IG	3 2	87	22	91	1 109
Mechanical properties at 150°F					

Initial trails Table 2 were conducted to make a final selection of foam and to determine which spike diameter would best penetrate graphite/epoxy laminates during a hot debulk process The laminates in this process were constructed of 40 ply AS4/3501 6 material in a crossply configuration Both types of foam were 0 50 in thick and inserted with two areal densities The spike length for the first series of tests was set at 0 40 in long and the second test was set at 0 50 in long to achieve better penetration

The percent penetration of z fiber pins through the entire laminate is the only qualitative analysis available The Divinycell foam with 0 40 in long spikes achieved 50 percent better fiber penetration than the Rohacell In both cases the 6 mil rod stock was too instable to penetrate the 0 20 in thick laminate A second trail was conducted with 8 and 10 mil diameter spikes Nearly 80 percent penetration was achieved with the Divinycell H45 foam and 0 50 in long spikes Therefore this system was selected as a baseline for preform fabrication

4 Preform Fabrication

Preforms were design to achieve penetration just short of full prepreg thickness per Boeing request The following foam construction was used for deliverable preforms

0 10 in Thick prepreg material
0 25 in Divinycell H45
0 175 in spike length
3 25 x 80 in area
0 008 diam carbon/epoxy rod
0 5 percent areal density reinforcement

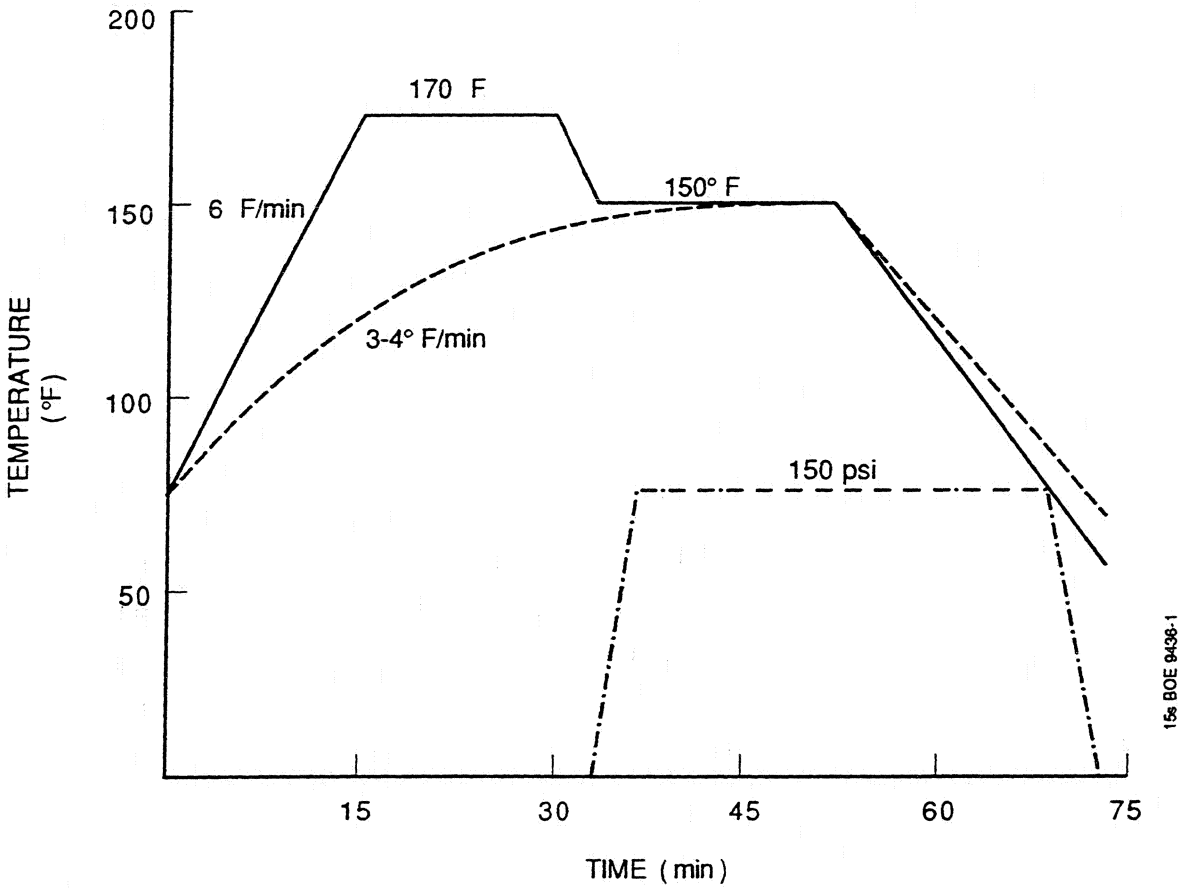

1) PRESSURIZE WHEN PART TEMPERATURE REACHES 145° F, HOLD 29" Hg VACUUM

2) HOLD PRESSURE UNTIL PART COOLS BELOW 100° F

3) HOLD VACUUM UNTIL PART REACHES ROOM TEMPERATURE 75° F

Figure 2 Recommended AS4/3501 6 Hot Debulk Z Fiber Cycle

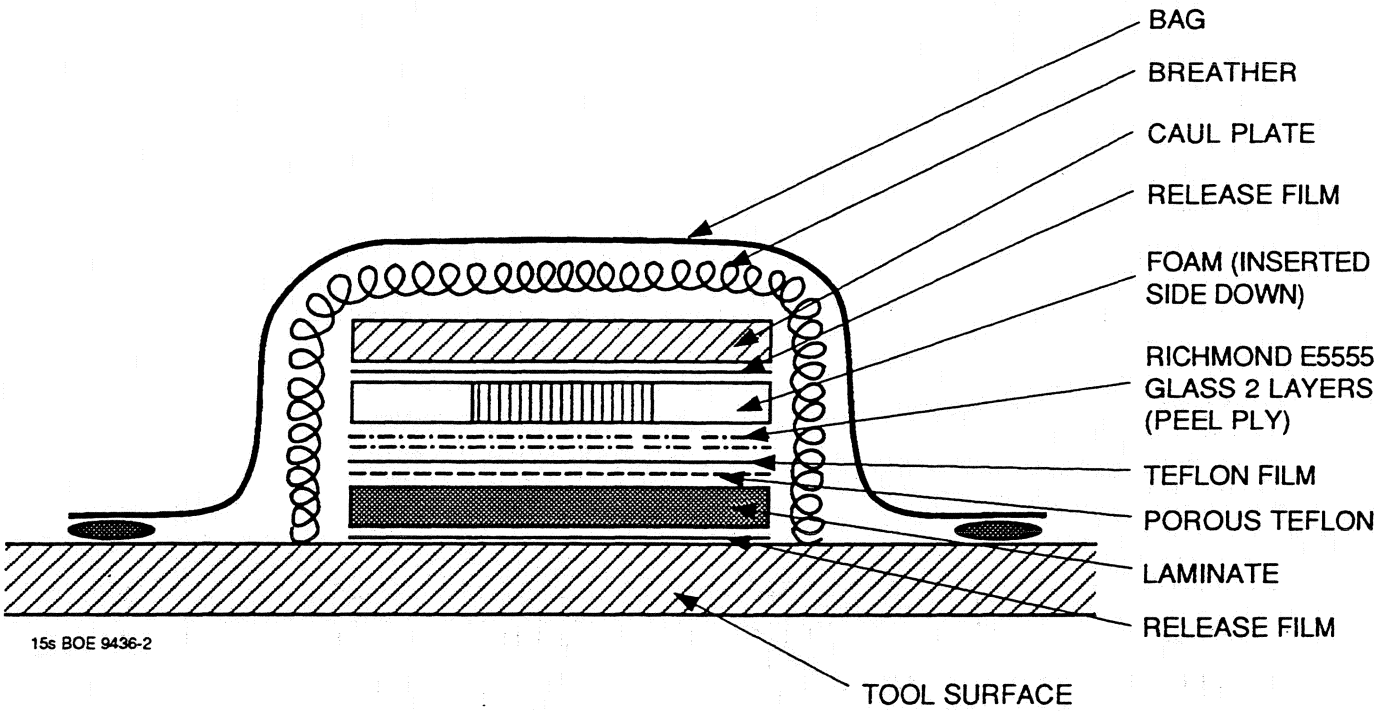

Figure 3. Recommended Hot Debulk Vacuum Bag Schematic

Table 2 Hot-Debulk Process Trials

		After Hot Debulk Cycle				After Cure	
Foam	Rod Diam (Mils)	Foam Thickness	Pin Height Protruding	Penetration (%)	Laminate Thickness	Penetration (%)	Laminate Thickness
Rohacell 51IG 0 40 spike	6	0 12	0 1-0 12	12	0 237		-
	8	0 12	0 10 0 12	15	0 244	-	
	10	0 13	0.10 0 12	22	0 242		
Divinycell H45 0.40 spike	6	0 23	0.12 0.14	7	0 240		
	8	0 24	0 12 0.14	24	0 238	61	0.203
	10	0 24	0 12-0 14	48	0 232	61	0 216
Divinycell H45 0 50 spike	8	0 21	0 12	76	0 232		
	10	0 21	0 12	80	0 230		

- 0.20 in. Thick prepreg material
  0 50 in. Divinycell H45
  0 380 in spike length
  1 25 x 120 in area (2 pieces)
  0.008 diam carbon/epoxy rod
  0 5 percent areal density reinforcement

5 Recommendations

This program has successfully demonstrated feasibility of inserting z fibers into composite prepreg during hot debulk cycles This method can significantly reduce the complex tooling required for insertion of z fibers during actual cure cycles Additional process development is recommended to maximize fiber penetration and reinforcement consistency

Minimal tooling may be required to ensure proper compaction of the foam during the debulk cycle. Figure 4 illustrates an example of applying z-fibers to hat section flanges The key to this schematic is the spacer in the corner of the hat section This prevents any significant fiber wrinkling or mark off on the hat section as the foam collapses This spacer also ensures that the top plate on the foam collapses vertically and cannot shift horizontally A series of trials would define tooling requirements in this area and should be conducted prior to reinforcing large scale articles.

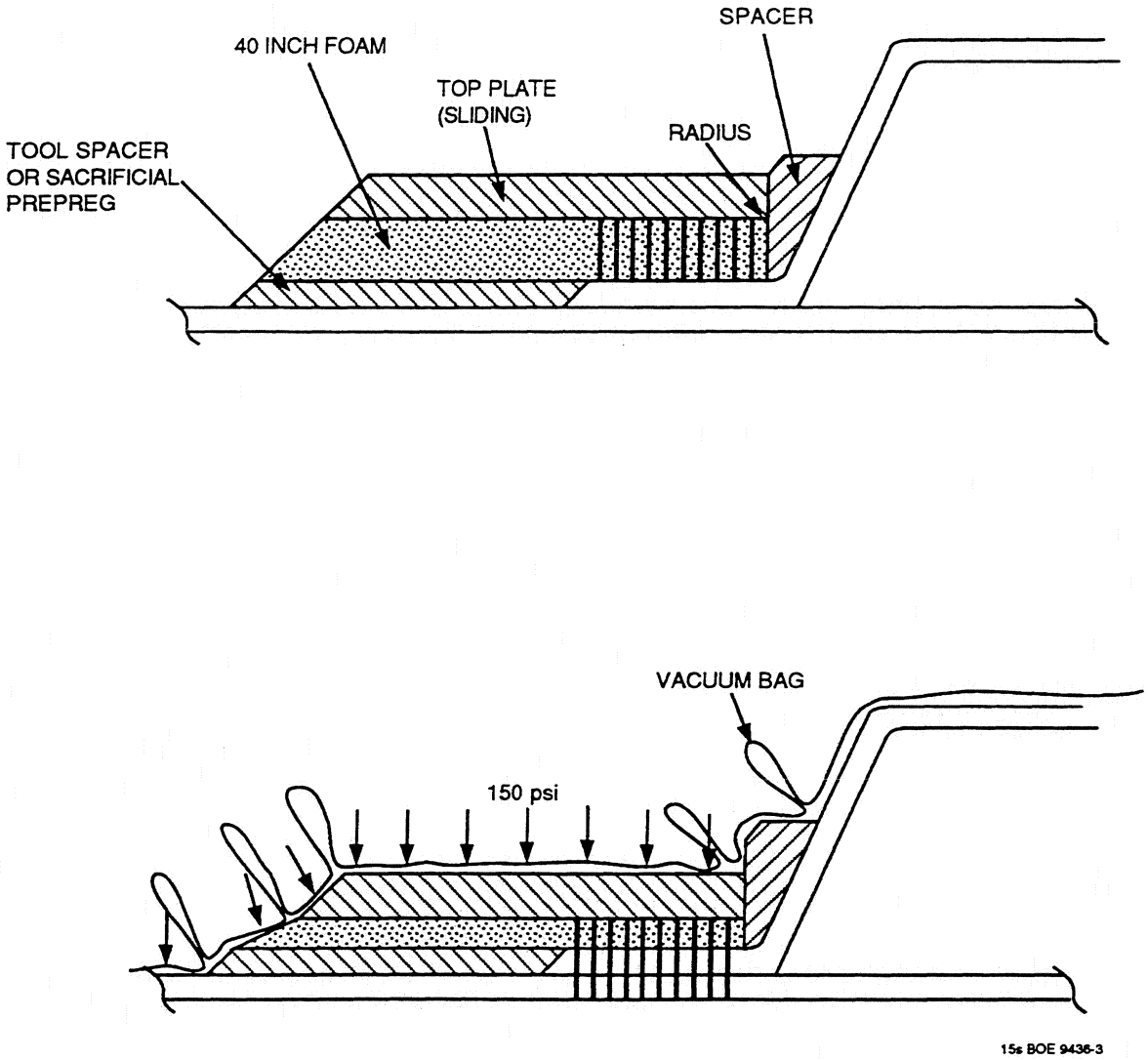

Figure 4 Recommended Bag Technique for Z-Fiber Reinforced Hat Sections

APPENDIX C

Northrop-Grumman Door Edge Frame Element Definition

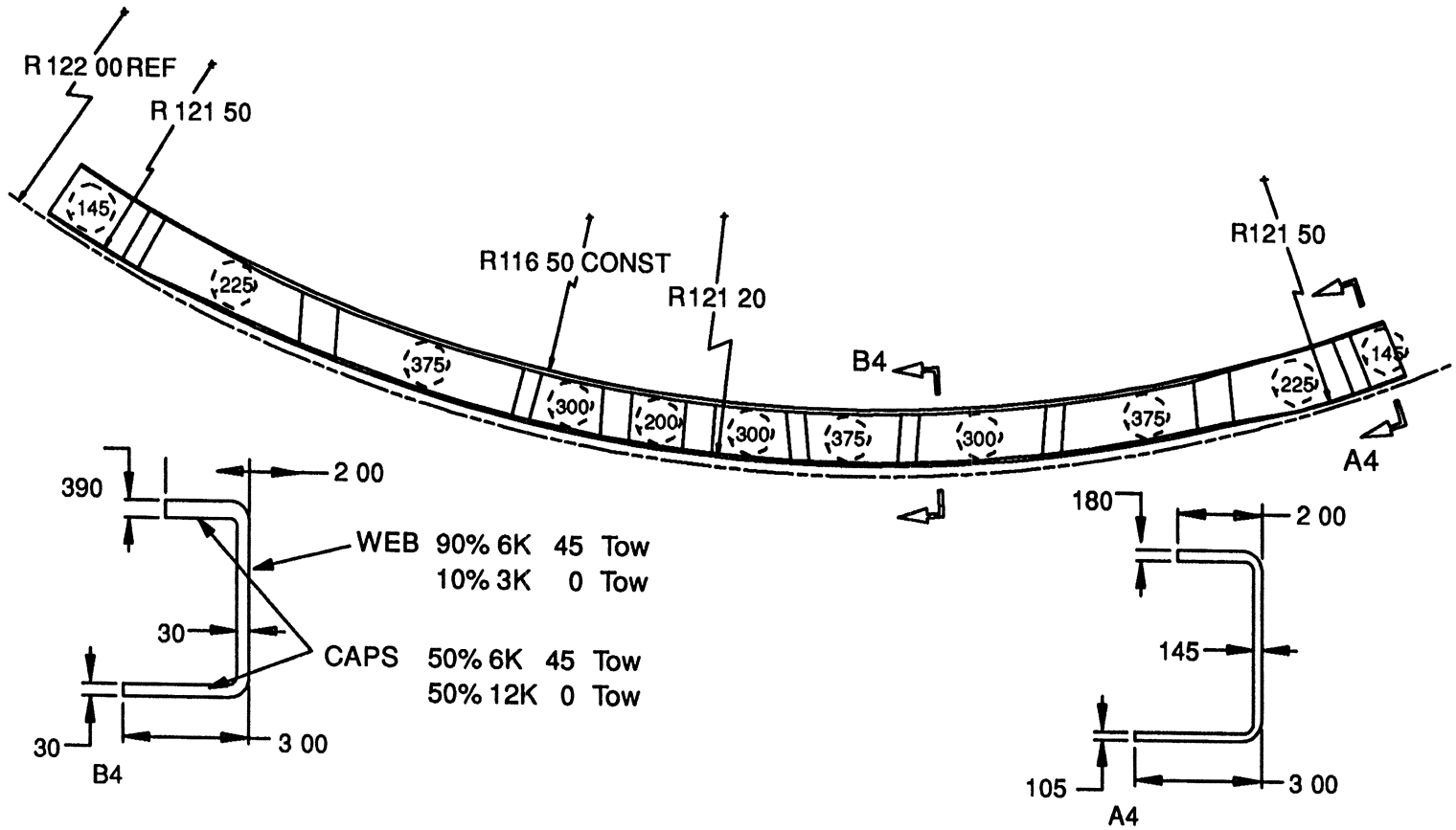
R 122 00 REF
R 121 50
R116 50 CONST
R121 20
R121 50
B4
A4
145
225
375
300
200
300
375
300
375
225
145
390
2 00
WEB 90% 6K 45 Tow
10% 3K 0 Tow
30
CAPS 50% 6K 45 Tow
50% 12K 0 Tow
30
3 00
B4
180
2 00
145
105
3 00
A4

REPORT DOCUMENTATION PAGE

Form Approved
OMB No 0704-0188

Public reporting burden for this collection of information is estimated to average 1 hour per response, including the time for reviewing instructions searching existing data sources gathering and maintaining the data needed and completing and reviewing the collection of information. Send comments regarding this burden estimate or any other aspect of this collection of information, including suggestions for reducing this burden, to Washington Headquarters Services, Directorate for Information Operations and Reports 1215 Jefferson Davis Highway Suite 1204 Arlington, VA 22202-4302, and to the Office of Management and Budget Paperwork Reduction Project (0704-0188) Washington DC 20503

1 AGENCY USE ONLY (Leave Blank)	2. REPORT DATE	3 REPORT TYPE AND DATES COVERED
	April 1997	Contractor Report

4 TITLE AND SUBTITLE
Advanced Technology Composite Fuselage Manufacturing

5 FUNDING NUMBERS
C NAS1 18889
C NAS1 20013 (Task 2)
WU 510-02 13-01

6 AUTHOR(S)
K S Willden C G Harris B W Flynn M G Gessel D B Scholz
S Stawski and V Winston

7 PERFORMING ORGANIZATION NAME(S) AND ADDRESS(ES)
The Boeing Company
P O Box 3707
Seattle WA 98124-2207

8 PERFORMING ORGANIZATION REPORT NUMBER

9 SPONSORING / MONITORING AGENCY NAME(S) AND ADDRESS(ES)
National Aeronautics and Space Administration
Langley Research Center
Hampton VA 23681-0001

10 SPONSORING / MONITORING AGENCY REPORT NUMBER
NASA CR-4735

11 SUPPLEMENTARY NOTES
Langley Technical Monitor W T Freeman Jr

12a. DISTRIBUTION / AVAILABILITY STATEMENT
[redacted] Unclassified- Unlimited
Subject Category 24

12b DISTRIBUTION CODE

13 ABSTRACT *(Maximum 200 words)*
The goal of Boeing s Advanced Technology Composite Aircraft Structures (ATCAS) program is to develop the technology required for cost-and weight-efficient use of composite materials in transport fuselage structure Carbon fiber reinforced epoxy was chosen for fuselage skins and stiffening elements and for passenger and cargo floor structures The automated fiber placement (AFP) process was selected for fabrication of stringer stiffened and sandwich skin panels Circumferential and window frames were braided and resin transfer molded (RTM d) Pultrusion was selected for fabrication of floor beams and constant-section stiffening elements Drape forming was chosen for stringers and other stiffening elements cocured to skin structures

Significant process development efforts included AFP braiding RTM autoclave cure and core blanket fabrication for both sandwich and stiffened skin structure Outer-mold line and inner mold line tooling was developed for sandwich structures and stiffened-skin structure

The effect of design details process control and tool design on repeatable dimensionally stable structure for low cost barrel assembly was assessed Subcomponent panels representative of crown keel and side quadrant panels were fabricated to assess scale-up effects and manufacturing anomalies for full scale structures Manufacturing databases including time studies part quality and manufacturing plans were generated to support the development of designs and analytical models to access cost, structural performance and dimensional tolerance

14 SUBJECT TERMS
Advanced Composite Technology Program Transport fuselage structures Manufacturing Advanced fiber placement Resin transfer molding Braiding Tooling Skin/stringer construction Honeycomb sandwich construction Dimensional stability and tolerance

15 NUMBER OF PAGES
190

16 PRICE CODE

17 SECURITY CLASSIFICATION OF REPORT	18 SECURITY CLASSIFICATION OF THIS PAGE	19 SECURITY CLASSIFICATION OF ABSTRACT	20 LIMITATION OF ABSTRACT
Unclassified	Unclassified	Unclassified	