AEROTHERMAL TEST OF METALLIC TPS FOR X-33 REUSABLE LAUNCH VEHICLE

*James Wayne Sawyer, *Jefferson Hodge, **Brad Moore

*NASA Langley Research Center, Hampton, VA, USA
**B.F. Goodrich Aerospace, Chula Vista, CA, USA

ABSTRACT

An array of metallic Thermal Protection System (TPS) panels including the seals developed for the windward surface of the X-33 vehicle is being tested in the Eight Foot High Temperature Tunnel at the NASA Langley Research Center. These tests are the first aerothermal tests of an X-33 TPS array and will be used to validate the TPS for the X-33 flight program. Specifically, the tests will be used to evaluate the structural and thermal performance of the TPS, the effectiveness of the high temperature seals between adjacent tiles and the durability of the TPS under realistic aerothermal flight conditions. The effect of varying step heights, damage to the seals between adjacent panels, and the use of secondary seals will also be investigated during the test program. The metallic TPS developed for the windward surface of the X-33 and the test program in the Eight Foot High Temperature Tunnel is presented and discussed.

INTRODUCTION

NASA is committed to work with the aerospace industry to develop a Reusable Launch Vehicle (RLV) that will greatly reduce the cost of launching a payload into space. A single-stage-to-orbit RLV was selected as having the most potential for reducing launch costs (Refs. 1-2). NASA and an industry team led by Lockheed Martin have selected a lifting body configuration (see figure 1) referred to as the VentrueStar™ for further development (Refs. 3-4). The VentureStar™ is projected to have refractory composite leading edges, control surfaces and fairings in the highest heating areas and metallic thermal protection system (TPS) over the remainder of the vehicle.

A 1/2 scale vehicle referred to as the X-33 is being designed and fabricated, and will be flown to validate the technology for use on the VentureStar™. The high heating areas of the X-33 will be fabricated using refractory composite hot structure and metallic TPS similar to that planned for the VentureStar™ (see figure 2). The TPS on the windward surface of the X-33 will consist of Inconel 617 or PM-1000 superalloy honeycomb sandwich surface panels and fibrous insulation enclosed in foil bags. The leeward surface of the X-33 will be covered by insulation blankets similar to that used on the space shuttle in order to reduce cost. The blankets consist of fibrous insulation enclosed in a quartz cloth and directly bonded to a graphite composite aeroshell.

A metallic TPS has been developed for the windward surface of the X-33 vehicle and an array of these TPS panels is being tested in the Eight Foot High Temperature Tunnel at NASA Langley Research Center. These tests are the first aerothermal tests of a X-33 TPS array including the seals and will be used to validate the TPS for the X-33 flight program. Specifically, the tests will be used to evaluate the structural and thermal performance of the TPS, the effectiveness of the high temperature seals between adjacent tiles and the durability of the TPS system under realistic aerothermal flight conditions. The effect of varying

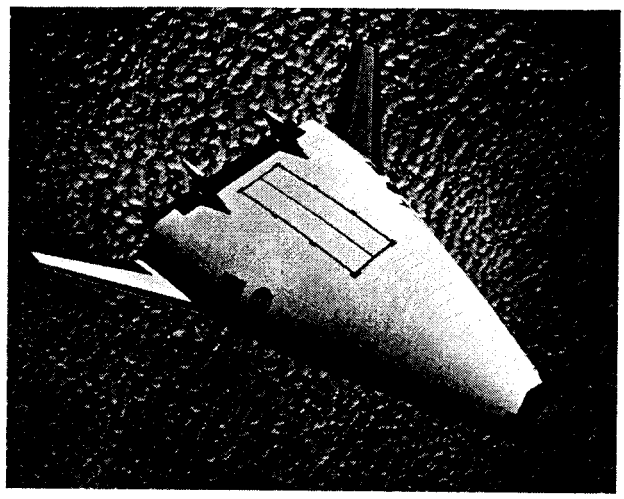

Figure 1. VentureStar™ Vehicle Configuration.

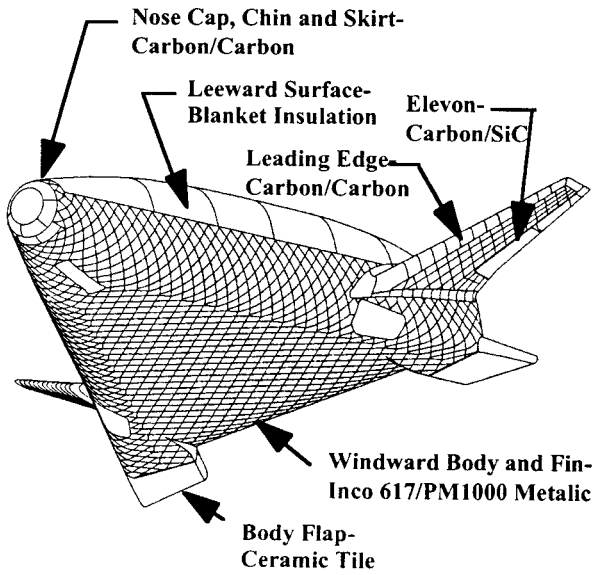

Figure 2. Thermal Protection System proposed for the X-33 Vehicle.

step heights, damage to the seals between adjacent panels, and the use of secondary seals will also be investigated during the test program. The metallic TPS developed for the windward surface of the X-33 and the test program in the Eight Foot High Temperature Tunnel will be discussed in this paper.

X-33 METALLIC TPS

The TPS being developed for the X-33 consists of diamond shaped metallic panels approximately 46 cm along a side edge (Refs. 5-6). The TPS panels consist of a metallic honeycomb sandwich heat shield outer panel with foil-encapsulated fibrous insulation attached to the inner side of the heat shield panel. Each diamond-shaped panel is mechanically attached to a metallic stand-off rosette at each corner which is, in turn, attached to a composite support structure (see figure 3). Since the support structure is not continuous, the TPS system performs the dual role of supporting the aerodynamic pressure loads as well as providing thermal protection to the remainder of the vehicle. This dual role for the TPS results in the requirement that the joints between adjacent TPS panels experience the significant pressure differential between the outer surface and the interior of the vehicle, and must prevent hot gas flow into the internal cavity of the vehicle. Also, the seals must function at temperatures near the surface temperature of the TPS. Although metallic TPS concepts have been developed and demonstrated to perform adequately for a variety of aerospace applications (Refs. 7-8), no TPS system has demonstrated capability to perform both as a TPS and an aeroshell for reentry conditions similar to those projected for the X-33 or the VentureStar™.

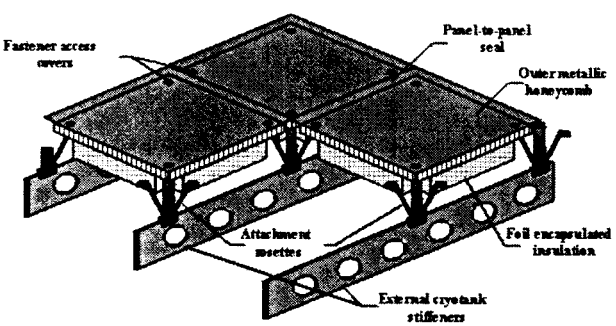

Figure 3. Metallic TPS configuration proposed for the X-33 and VertureStar™ vehicle.

The foil outer face sheets of the honeycomb sandwich panels overlap the surface of the downstream TPS panels to form metal-to-metal seals between panels as shown in figure 4. Secondary seals between panels are formed by foil strips attached to the inner face sheets of each panel and bent at 45° as shown. Since the TPS must support the aerodynamic pressure loads, the overlapping primary seals and the secondary seals must prevent hot gas flow into the gaps between panels and support a pressure differential across the TPS panel.

The TPS panels are fabricated using either Inconel 617 or PM1000 for the facesheets, the honeycomb core and the foil bags encapsulating the insulation. The PM1000 material is used in the slightly higher heating areas on the vehicle. The TPS panels are attached to the rosettes by MA754 mechanical fasteners as shown in figure 5. The mechanical attachment is between the inner face sheet of the honeycomb panel and the rosette standoff. An insulation plug and a metal cap is used to cover the fastener and to make the surface flush with the outer face sheet of the honeycomb panel. The stand-off rosette supports for the TPS panels are fabricated from Rene' 41 material.

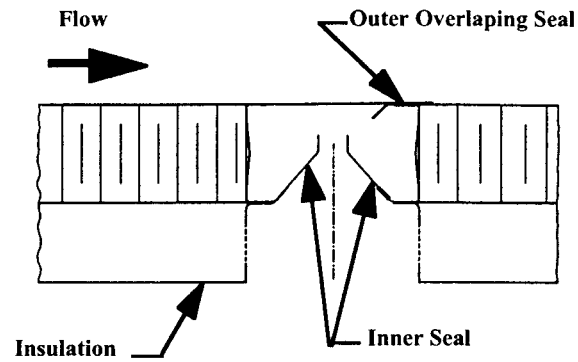

Figure 4. Seal configuration between metallic TPS panels.

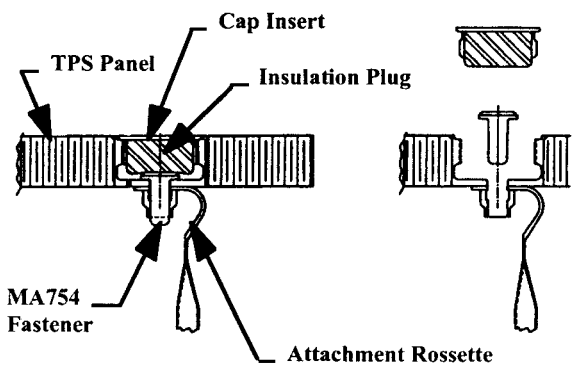

Figure 5. Attachment of TPS panels to rosettes.

APPARATUS AND TESTS

The test setup consists of an array of flat panels representative of TPS panels being fabricated for the flat windward surface on the X-33 vehicle as shown in figure 6. The TPS panel array is mounted in a panel holder and aerothermal tests are being conducted in the Mach 7 Eight Foot High Temperature Tunnel at NASA Langley Research Center. Tunnel combustor pressure and the angle of attack of the test sled with respect to the tunnel flow is being varied to simulate various aerothermal flow conditions over the panel array that are expected during the X-33 flight program. The TPS test array is preheated with radiant heaters to the maximum test temperature following a typical X-33 reentry heating profile before insertion into the flow. The TPS array is instrumented with thermocouples, strain gages and calorimeters to monitor the performance of the system. The TPS test panel array is

mounted over a plenum chamber. In order to evaluate the effectiveness of the seals between the TPS panels under various flow conditions, flow out of the plenum and pressure differentials across the thickness of the panel are measured. Thermocouples and calorimeters located near the seals are also used to determine the effectiveness of the seals in preventing hot gas flow into the plenum chamber.

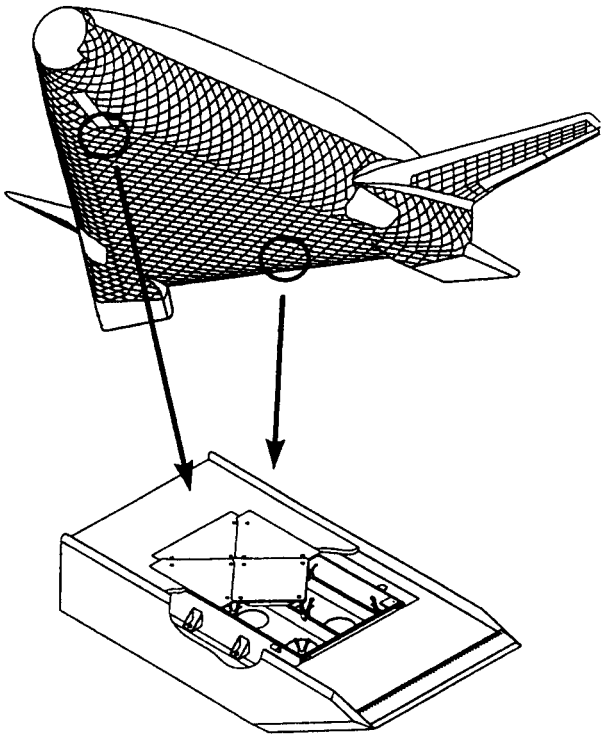

Figure 6. Typical vehicle locations for TPS test panel array.

Test Article Description

The test article consists of an array of flat Inconel 617 TPS panels approximately 0.8 m by 1.4 m with a planform layout as shown in figure 7. The array consists of one full TPS panel and six panel segments to form a rectangular configuration. The TPS panels are diamond-shaped with edges that are 46 cm long and are representative of the flat region of the X-33 windward surface shown in figure 6. The TPS panels are orientated so that the short diagonals of the diamond shaped panels are aligned with the length of the panel array. The panels are made of two 0.15 mm Inconel 617 face sheets that are brazed to Inconel 617 honeycomb core (4.7 mm square cells and 0.04 mm foil thickness). The surface of the TPS panels are painted with Pyromark 2500™ thermal paint to achieve a relatively high uniform emissivity. Three centimeters of 0.056 g/cm^3 Q-fiber felt insulation are encapsulated on the backside of each honeycomb panel with a resistance welded 0.08 mm thick Inconel 617 pan. The TPS panels are mechanically attached to and supported by Rene' 41 rosette standoff attachment clips located at each intersection of the TPS panels as shown in figure 8. The standoffs are mechanically attached to composite I-beams supported in a steel plenum chamber that surrounds the back side of the TPS panel array. The TPS panels, the seals between adjacent panels and the rosette standoffs are identical to the TPS being installed on the X-33 vehicle and discussed in the previous section. The seals around the periphery of the test article between the TPS panel segments and the plenum chamber are also similar to panel close-out regions planned for the X-33.

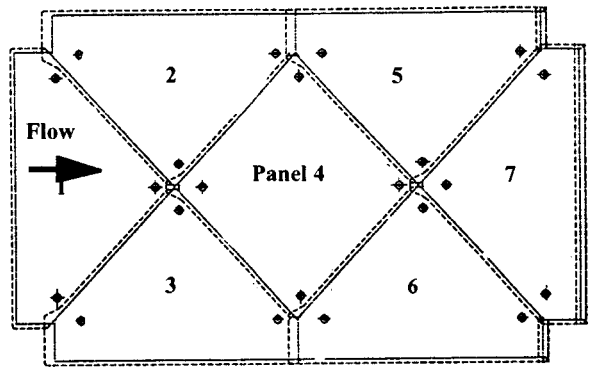

Figure 7. TPS panel array for Eight Foot High Temperature Tunnel tests.

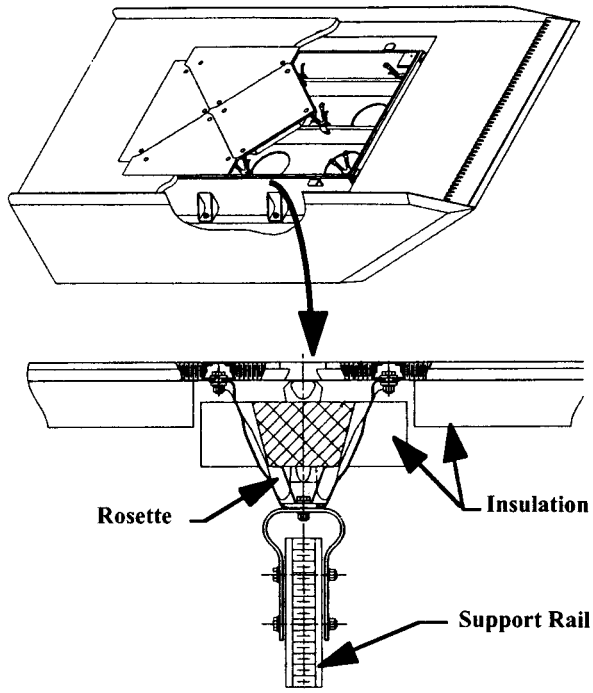

Figure 8. Attachment of TPS to support rails.

Aerothermal Test Facility

The TPS panel array is being tested in the Langley Eight Foot High Temperature Tunnel which is a large blowdown tunnel that simulates combinations of aerodynamic heating and pressure loading representative of flight at Mach 7 and altitudes between 25 km and 40 km (Ref. 9). The high energy required for the simulation is obtained by burning a

mixture of methane and air under pressure in the combustor and expanding the products of combustion through the test chamber. The TPS panel array mounted in the panel holder is retained in the pod area of the tunnel (see figure 9) for protection during tunnel startup and shutdown. The panel holder is rectangular with a half-wedge leading edge and a large cavity to accommodate test panels, support structure and instrumentation. The panel holder is covered with a one inch thick layer of glassrock to protect the steel structure from the aerodynamic heating of the tunnel. Boundary-layer trips and side fences assure uniform turbulent flow over the panel surface. Pressure in the cavity behind the test panel is vented to the base of the panel holder to produce a differential pressure loading during aerothermal tests. Banks of radiant lamps, located in the pod, are used to preheat the TPS panel array through a prescribed portion of an entry thermal profile prior to rapid insertion into the Mach 7 stream.

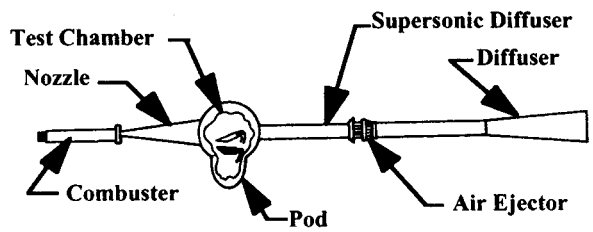

Figure 9. Diagram of Eight Foot High Temperature Tunnel.

Test Setup

The TPS panel array is mounted in the wind tunnel panel holder by attaching the plenum box to rails on the inside walls of the cavity in the panel holder (see figure 10). The attachment of the plenum box to the panel holder is shimmed so that the surface of the TPS panel is approximately flush with the glassrock surface of the panel holder on the side edges and the trailing edge. The 0.15 mm thick outer facesheet of the honeycomb sandwich TPS panel extends approximately 2.5 cm over the glass rock surface of the test sled along the two sides and the trailing edge of the test article as shown in figure 11. The leading edge of the test article is recessed approximately 0.6 cm below the glassrock test sled surface to insure that thermal bowing of the TPS panel array does not result in a forward facing step to the flow. Also an L-shaped Inconel 617 foil bracket 0.25 mm thick is attached to the forward surface of the test sled cavity and extends approximately 2.5 cm downstream over the leading edge of the TPS panel array as shown in figure 12. A photograph of the test article installed in the panel holder is shown in figure 13.

Instrumentation

The TPS array and the panel holder are instrumented with a flow meter, a microphone, an accelerometer, 2 calorimeters, 2 surface pressure taps, 57 strain gages, and 56 thermocouples. In addition, 2 pressure probes and 6 thermocouples are located in the plentum chamber behind the test panel to provide a measure of the chamber conditions during the tests. Video cameras will be used throughout the tunnel runs and a thermography system will be used to record temperature variations over the surface of the TPS panels while in the flow stream. The instrumentation leads and the pressure taps are routed through the base of the plenum chamber and out through the panel holder sting. A RTV rubber seal is used to prevent flow into and out of the plenum chamber through the exit hole for the instrumentation.

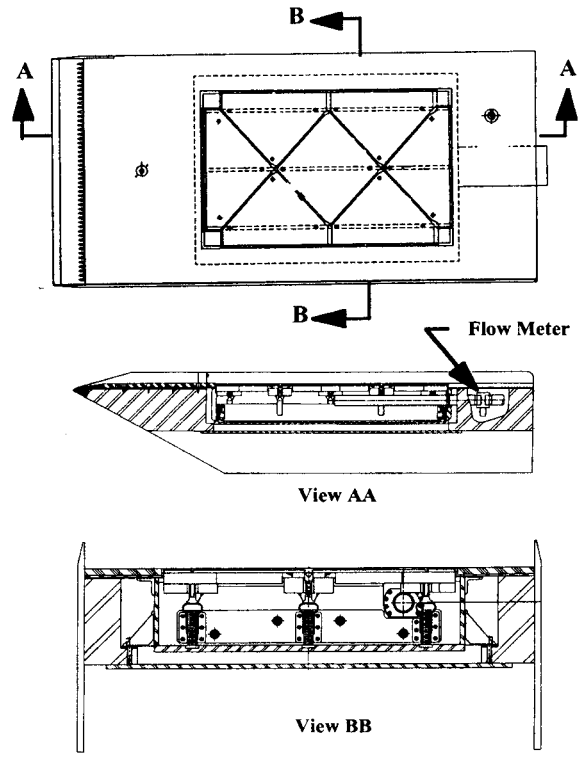

Figure 10. Mounting of TPS panel array in panel holder.

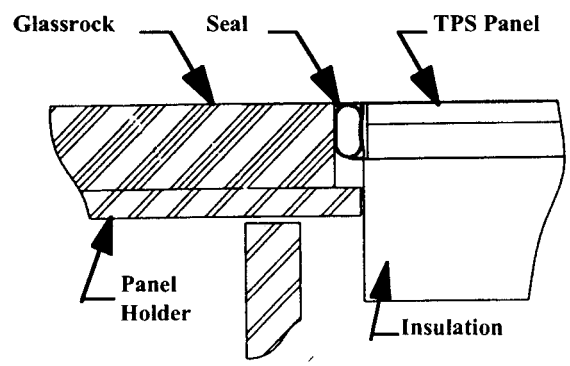

Figure 11. Side and trailing edge seals between TPS test panel array and panel holder.

The flow meter is located at the downstream end of the plenum chamber and is vented to the base of the test sled as shown in figure 10. The flow meter is attached to the plenum chamber by a flange fitting and a tube that extends approximately 69 cm inside the chamber. A 5.1 cm flow meter and tube assembly is installed in the test setup but

an alternate 2.5 cm flow meter and tube assembly is available if the flow out of the plenum chamber is not sufficient to require the large flow meter. A thermocouple is mounted in the exit of the flow meter to measure the temperature of the air flowing out of the plenum chamber.

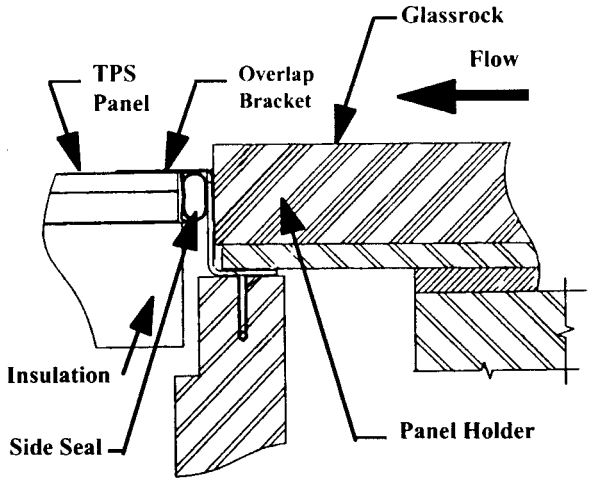

Figure 12. Leading edge seal between TPS array and panel holder.

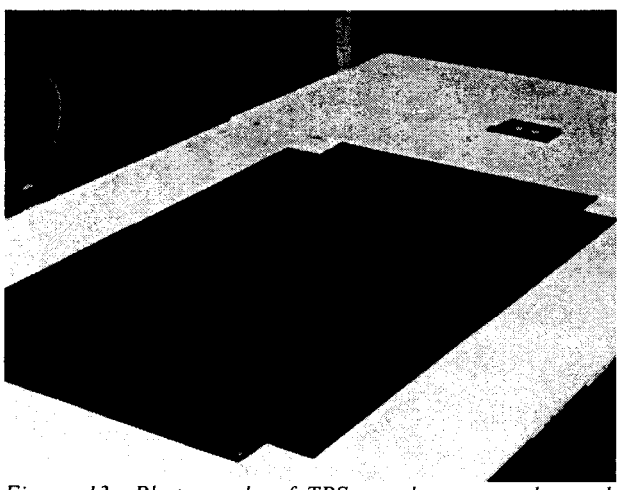

Figure 13. Photograph of TPS panel array and panel holder installed in wind tunnel.

The microphone is flush mounted in the surface of the panel holder behind the TPS test panel array and to the right of center of the panel holder as shown in the layout in figure 14. The accelerometer is flush mounted in panel 6. One of the calorimeters is flush mounted on the center line of the panel holder approximately 25 cm upstream of the TPS panel array. The other calorimeter is located in the center of the interface between panels 3 and 4 and is mounted directly below the aerodynamic seals. The two static pressure taps are flush with the surface of the TPS panels and one is located in the center of panel 4 and the other one is located in panel 5.

Both low- (WK-type) and high-temperature (NZ-type) strain gages are installed on the test article. The high-temperature gages are located on the support rosettes near the surface of the TPS panels and on the inner surface of the honeycomb sandwich outer panels. Low-temperature strain gages are used on the lower parts of the support rosettes where they attach to the substructure. The strain gages are located on TPS panels 2, 4 and 5 and on the four rosettes supporting panel number 4, the center panel in the TPS test array. Panel 4 has strain gages installed near the center of the panel and at the side locations shown in figure 15. All the strain gages on the TPS panels are installed on the inner face sheet of the honeycomb sandwich outer panel. Panels 2 and 5, which are close-out panels with only two sides adjacent to other TPS panels, are also instrumented with strain gages on the sides adjacent to other TPS panels and the gages are oriented similar to those shown in figure 15 for panel 4. High-temperature (NZ-type) strain gages are installed on the straight portions of the rosettes near the point where they attach to the TPS panels (see figure 16) and low-temperature (WK-type) strain gages are installed on the straight portions of the rosettes near the point where they attach to the support rails. The strain gages on the rosettes are aligned with the legs of the rosettes. Both static and dynamic strain gages are installed on both the rosettes and the honeycomb sandwich panels.

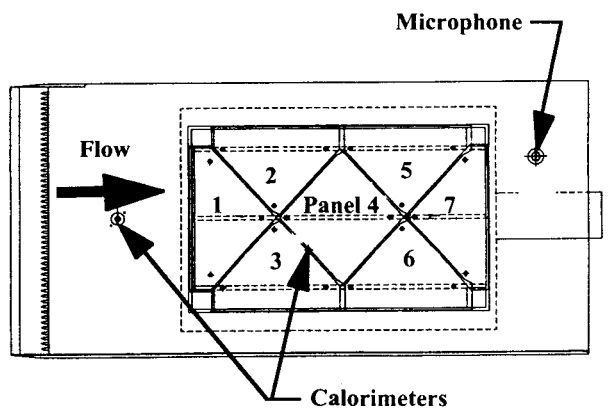

Figure 14. Layout for TPS test panel array in panel holder.

Thermocouples are installed near each of the strain gages so that the strain gage data can be corrected for apparent strain variations due to temperature changes. Thermocouples are also installed on the back side of the inner and outer face sheets of the honeycomb sandwich panels, on the back side of the foil package surrounding the fibrous insulation, on the rosettes, on the inner and outer seals between the panels, in the cavities between the panels and between the panels and the plenum chamber walls and in the cavity behind the TPS panel assembly. The surface thermocouples are used to control the surface temperatures of the TPS array during the preheat thermal cycles and to monitor the surface temperatures during the aerothermal tests. The thermocouples on the inner facesheets of the honeycomb sandwich panels and on the back of the insulation packages are used to evaluate the

thermal effectiveness of the TPS panels. The thermocouples on the seals and in the plenum chamber cavities are used to evaluate the effectiveness of the aerodynamic seals.

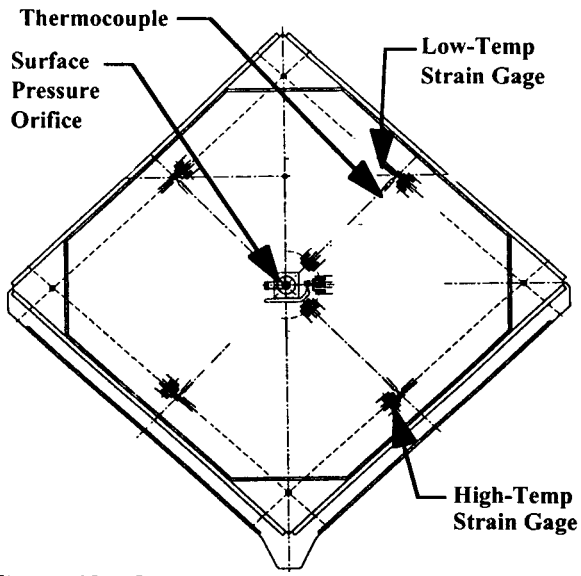

Figure 15. Instrumentation on the back side of the central panel (panel 4) in the TPS array.

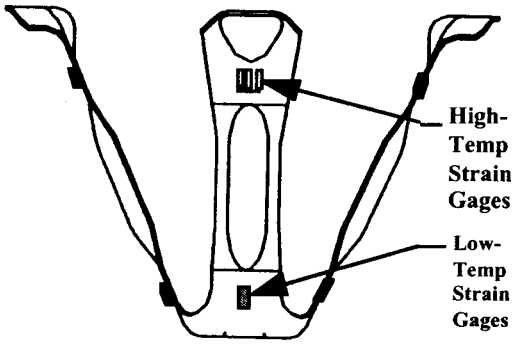

Figure 16. Strain gage locations on instrumented rosettes.

Test Procedure

The test procedure consists of preheating the TPS panel array in the pod below the test chamber, starting the wind tunnel, retracting the heater banks, inserting the panel holder/TPS array into the flow, conducting aerothermal heating tests, retracting the panel holder assembly, covering the TPS panel array with the heaters, stopping the tunnel flow, and allowing uncontrolled cooldown of the TPS panel array. A diagram showing the test sequence for a typical tunnel run is shown in figure 17. The tunnel flow conditions and the panel holder angle of attack can be set before the model is inserted into the flow or can be adjusted during the test as desired. Data are recorded throughout the test including the preheat and the model cooldown. Static measurements (temperature, static strains, pressure, heat flux, and mass flow) are recorded at the rate of once per second during the preheat and cooldown portion of the test and 50 times per second during the tunnel startup, model insertion, flow tests, model retraction, and tunnel shutdown. Dynamic measurements (strain, acceleration, sound) are recorded at the rate of 5000 times per second. Select data channels are displayed in graphical form during the tests so that the performance of the TPS panel array can be evaluated, and if necessary, the test aborted to prevent damage to the test article.

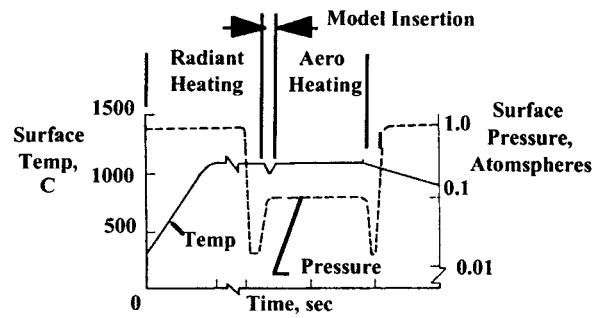

Figure 17. Test sequence for typical aerothermal test cycle.

TEST PLANS

Approximately 21 tests are planned for the present TPS test configuration. The tests are summarized in Table I. The first two tests listed are thermal tests that will be used to check out the radiant heater system and to measure the thermal response of the TPS panel array. For the thermal cycles and all the preheat cycles, the surface of the TPS panel array will be heated to the maximum preheat temperature at a rate of 6°C/sec and held constant until insertion into the tunnel stream or until completion of the thermal cycle. The test conditions planned for the TPS panel array represent the more severe aerothermal conditions expected during the X-33 flights. Figure 18 shows surface pressure versus surface temperature variations for typical X-33 flights at locations on the vehicle for which the TPS test panel was designed. Also shown on the figure is the Eight Foot High Temperature Tunnel test envelope and the design limit curve for the TPS design. All the planned tests except the last two will be at surface temperatures and pressures below the design limit shown in figure 18.

The first aerothermal test will be test number 3 and will be the most benign test condition possible for the test setup. The maximum preheat temperature will be 705°C, the tunnel combustor pressure will be 6.9 mpa and the angle-of-attack will be 5°. The preheat temperature and the angle-of-attack for the first aerothermal test was selected so as to introduce only small temperature gradients into the TPS panel array and to keep the pressure differential across the thickness of the TPS panel (i.e., between exposed surface of TPS panel and the plenum) to a minimum. The next 6 tests (test

numbers 4-9) expand the flow and thermal conditions to induce larger temperature gradients and pressure differentials across the thickness of the TPS panel array. Tests 10 through 13 are to investigate the effect that out-of-plane surface height differences from one panel to the next panel has on the aerothermal performance of the TPS. Tests 14 and 15 are to investigate the use of rope insulation as secondary seals. Tests 16 and 17 are to investigate the effect on the thermal performance of the TPS due to typical damage to the seals between panels. Tests 18 and 19 are to explore the effect that failure of one of the mounting fasteners will have on the thermal and structural performance of the TPS. Tests 20 and 21 are intended to determine the overdesign capabilities of the TPS by exceeding the design limit for the surface temperature and pressure differential across the thickness of the panel.

Test No	Preheat Temp, °C	Combustor Pressure, mpa	Model Angle-of Attack, deg	Comments
1	705	-	-	Thermal
2	871	-	-	Thermal
3	705	6.9	5	Basic Model
4	505	6.9	2	Basic Model
5	505	6.9	5	Basic Model
6	816	13.8	10	Basic Model
7	816	13.8	10	Basic Model
8	713	13.8	10	Basic Model
9	713	13.8	10	Basic Model
10	713	13.8	10	Surface Step
11	713	13.8	10	Surface Step
12	713	13.8	10	Surface Step
13	713	13.8	10	Surface Step
14	713	13.8	10	Alternate Seal
15	713	13.8	10	Slternate Seal
16	713	13.8	10	Seal Damage
17	713	13.8	10	Seal Damage
18	713	13.8	10	Fastener Out
19	713	13.8	10	Fastener Out
20	816	13.8	12	TPS Capability
21	871	15.2	13	TPS Capability

Table I. Proposed test matrix for metallic TPS panel array in Eight Foot High Temperature Tunnel.

CONCLUDING REMARKS

Fabrication and assembly of the TPS panel array has been completed and the test article is mounted in the panel holder in the test chamber of the Eight Foot High Temperature Tunnel. Instrumentation is being connected and checked out. Tests are expected to be completed in the next eight weeks.

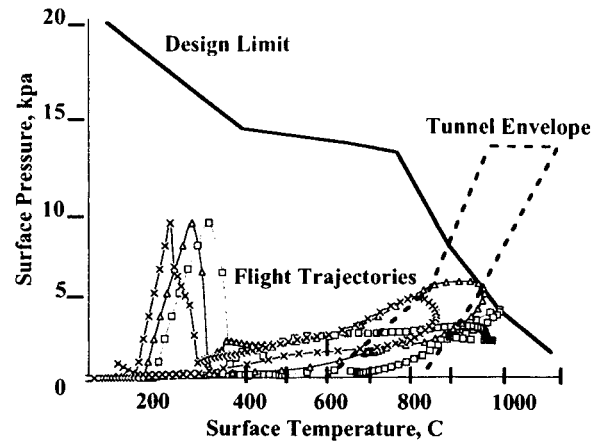

Figure 18. Comparison of typical X-33 flight conditions with design limit and Eight Foot High Temperature Tunnel conditions.

REFERENCES

1. Anon, 1994, Access To Space Study, Summary Report. Office of Space Systems Development, NASA Headquarters.
2. Becky, Ivan, 1994, Access To Space, Presented at the 45th Congress of the International Astronautical Federation, Jerusalem, Israel.
3. Baumgartner, Robert I., 1997, VentureStar Single Stage To Orbit Reusable Launch Vehicle Program Overview, Presented at the Space Technology and Applications International Forum, 2nd Conference on Next Generation Launch Systems, 1033-1039.
4. Baumgartner, Robert I., 1998, VentureStar - A Revolutionary Space Transportation Launch System, Presented at the Space Technology and Applications International Forum, 3rd Conference on Next Generation Launch Systems, 867-874.
5. Blosser, Max L., 1997, Development of Metallic Thermal Protection Systems for the Reusable Launch Vehicle, Presented at the Space Technology and Applications International Forum, 2nd Conference on Next Generation Launch Systems, 1125-1143.
6. Blosser, Max L., 1998, Reusable Metallic Thermal Protection Systems Development, Presented at the 3rd *European Workshop on Thermal Protection Systems,* Noordwijk, The Netherlands,
7. Blair, W., Meaney, J. E., and Rosenthal, H. A., 1984, Fabrication of Prepackaged Superalloy Honeycomb Thermal Protection System (TPS) Test Panels, NASA CR 3755.
8. Gorton, M. P., Shideler, J. L., and Webb, G. L., 1993, Static and Aerothermal Tests of a Superalloy Honeycomb Prepackaged Thermal Protection System, NASA TP 3257.
9. Deveikis, William D., Bruce, Walter E., Jr., and Karns, John R., 1974, Techniques for Aerothermal Test of Large, Flightweight Thermal Protection Panels in a Mach 7 Wind Tunnel, NASA TM X-71983.