STUDIES ON AUTOMATED MANUFACTURING OF HIGH PERFORMANCE COMPOSITES[*†]

R. J. Cano, H. L. Belvin,
A. B. Hulcher[‡] and R. W. Grenoble
NASA Langley Research Center
Hampton, VA 23681 USA

ABSTRACT

The NASA Langley Research Center fiber placement facility has proven to be a valuable asset for obtaining data, experience, and insights into the automated fabrication of high performance composites. The facility consists of two automated devices: an Asea Brown Boveri (ABB) robotic arm with a modified heated head capable of hot gas and focused infrared heating and a 7' x 17' gantry containing a feeder head, rotating platform, focused infrared lamp and e-beam gun. While uncured thermoset tow and tape, e.g., epoxy and cyanate prepreg, can be placed with a robot, the placement facility's most powerful attribute is the ability to place thermoplastic and e-beam curable material to net shape. In recent years, ribbonizing techniques have been developed to make high quality thermoplastic and thermoset dry material forms to the standards required for robotic placement. A variety of composites have been fabricated from these ribbons by heated head tow and tape placement including both flat plates and cylinders. Composite mechanical property values of the former were between 85 and 100 percent of those obtained by hand lay-up/autoclave processing.

INTRODUCTION

Automated robotic placement of tow, ribbon, and tape has emerged as a powerful technique for fabrication of high performance, fiber-reinforced composite structure. Production-ready equipment controlled by sophisticated computer software has been used to manufacture major portions of the Boeing 777 empennage, F/A-18E/F stabilator and inlet ducts, and V22 parts, among others. However, to advance and expand low cost manufacturing, research on fiber placement technology requires access to more economical, small-scale, experimental equipment that simulates the performance of the large manufacturing facilities that are unavailable to many universities, small businesses, and research organizations. Such equipment could be used to screen and develop composite fabrication techniques utilizing new resins, new fibers, new intermediate materials forms, new in-situ curing mechanisms, net shape placement, elevated temperature applications, and metal-PMC hybrids, to name several future thrust areas.

---

[*] Presented at the American Helicopter Society Hampton Roads Chapter, Structure Specialists' Meeting, Williamsburg, VA, October 30 –1 November 2001.
[††] This paper is declared a work of the U.S. Government and is not subject to copyright protection in the United States.
[‡] Currently employed at the NASA Marshal Space Flight Center, Huntsville, AL

FACILITIES

NASA Langley Research Center (LaRC) has developed a research laboratory for automated fabrication of composites that provides the means to address research areas pertinent to Advanced Tow/ Tape Placement (ATP). The lab centers around a robotic work cell configured for fiber placement which contains an Asea Brown Boveri (ABB) robotic arm with a modified Automated Dynamics Corporation (ADC) fiber placement head and supporting software developed by ADC and Composite Machinery Company (Figure 1) [1]. A portion of the initial work required to set up the robotic work cell concentrated on the development of placement heads, essentially stand alone end effectors that feed, heat, cut, place and laminate unidirectional fibrous material (Figure 2) [2].

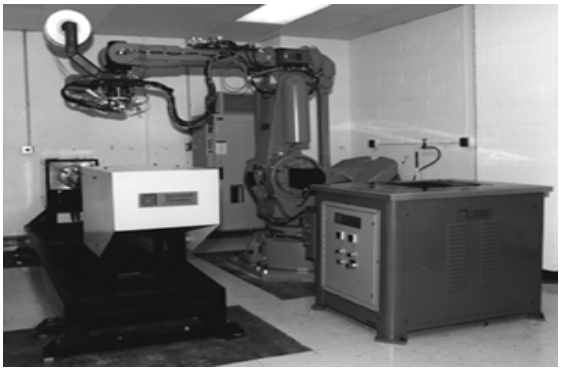

Figure 1: NASA Langley Robotic Composite Fabrication Facility

The ABB robot can handle a payload of up to 150-kg force and has a maximum reach of 2.4 meters. The modified ADC head is capable of placing five 0.635 cm-wide ribbons or one 3.18 cm-wide tape, either thermoplastic or thermoset, although it can be modified to handle narrower tow. Several heating methods can be employed (in combination or separately) including two conventional nitrogen gas torches and one recently developed focused infrared lamp. A steel compaction roller is employed (in lieu of a high temperature conformable roller which is currently in development with NASA funding) to apply pressure to the heated tape. Both a heated flat tool and a cylindrical tool on an ADC spindle satisfy most of the research requirements [2].

A focused infrared lamp was developed first to augment and later to replace the nitrogen gas torches which had serious problems with reduced heat transfer in the nip region due to hot gas flow stagnation. The radiant heat source permitted operation at lower compaction roller temperatures that reduced resin adherence to the rollers and improved part surface smoothness. Photomicrographs of thermoplastic panels placed with the infrared heater indicated low void content and good ply-ply interfacial adhesion as demonstrated by wedge peel and double cantilever beam (DCB) tests which are discussed more fully in the next Section. The DCB initiation fracture toughness numbers were comparable to those reported for autoclave processed panels [3].

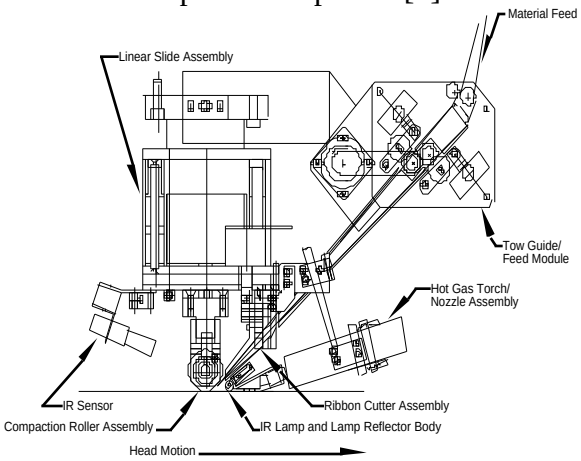

Figure 2: Schematic of the NASA Heated Head

Facilities were also installed to study magnetic induction welding to fabricate titanium-graphite (TiGr) composites, an ideal material for fabrication by in-situ

automated placement. Composite specimens were joined using a modified toroid or U-shaped magnet rather than a conventional pancake-type flattened coil magnet, the surface-treated, primed titanium foil serving as the susceptor. Frequencies from 50 to 500 kHz and power input levels from 1.25 to 1.75 kW were employed. Wedge peel tests were used to determine the strength of the titanium-graphite and graphite-graphite bonds. Good wetting and maximum peel strengths were obtained for AURUM™ PIXA/IM7 and LaRC™ PETI-5/IM7 polyimide/graphite TiGr composites at weld times of 5-10 seconds above 300°C and a spike heating temperature of 600°C for less than a second. Up to 5 plies of carbon-fiber-reinforced prepreg could be placed between titanium layers at reasonable placement rates [4]. Preliminary designs for a prototype toroid production heater to be used on the NASA robot have been made.

NASA LaRC contracted The Boeing Company to design and build an Electron Beam (EB) Cure-On-The-Fly (COTF) Automated Tape Placement (ATP) machine for materials and process development. During the tape laying process, an electron beam gun initiates reaction of the matrix resin causing the cure of the prepreg in a layer by layer manner. The gantry system and placement head are shown is Figures 3, 4 and 5. This technique allows for the fabrication of large structures without the substantial capital and tooling expenditures inherent in autoclave curing. It also provides significant consolidation pressure during curing which is not available during standard electron beam curing of composites. The machine is capable of automatically laying 3-inch wide composite prepreg for the fabrication of flat laminates up to 3ft. by 3ft. with any combination of angle plies. The placement head was built by Applied Poleramic, Inc., and the electron beam gun was built by Electron Solutions, Inc. The ATP-EB device has been installed at the Boeing Radiation Effects Laboratory (BREL) and demonstrated safely and effectively by tape laying and electron beam curing a graphite-epoxy laminate in-situ [5]. The ATP-EB device will be moved to NASA LaRC upon completion of a new facility that will house the equipment.

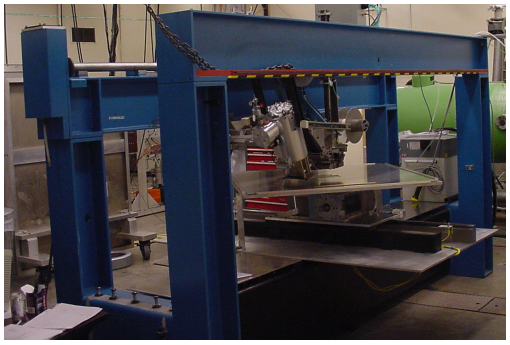

Figure 3: NASA Langley gantry containing a feeder head, rotating platform, focused IR lamp and e-beam gun

The new e-beam system is based on a two-axis, lower gantry motion design such that the ATP-EB head travels solely in the X direction. Translation in the Y direction and rotation around the Z axis are achieved by motion of the flat laminate tool. This allows for the fabrication of large (3ft. by 3ft.), flat laminates, and expansion potential of the entire device. The two axis lower gantry motion design enables the fabrication of larger laminates due to the functionality of the translation/rotation system on which the flat laminate tool is mounted.

The tape placement head is custom designed and engineered specifically for EB cure-on-the-fly processing. The 200 W, 225 keV E-beam gun is designed to provide a delivered dose equivalent to 5 MR in 30 milliseconds with a penetration depth of 100 microns into a graphite/epoxy prepreg with composite

density of 1.7 g/cm^3. The unique design allows for compaction of the prepreg tape via compliant silicone compaction rollers. The compaction rollers are contacted with the prepreg tape via a pressure piston with a variable force control system. In addition, the compaction rollers provide the flexibility to ensure compaction force for laminates that are not perfectly flat due to the hinge on which the rollers are attached to the head. This design provides the necessary compaction prior to in-situ electron beam cure. An IR heating system was integrated into the ATP device, as well as the electronic control system.

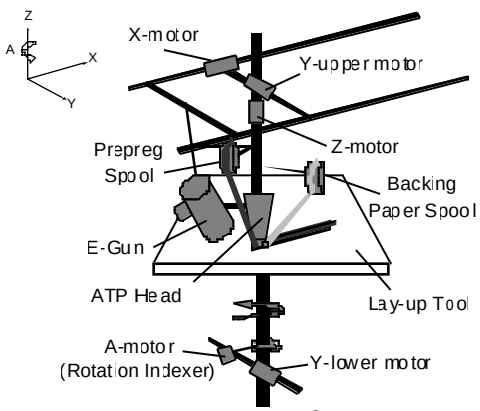

Figure 4: Schematic of the Cure-On-The-Fly Automated Tape Placement Machine

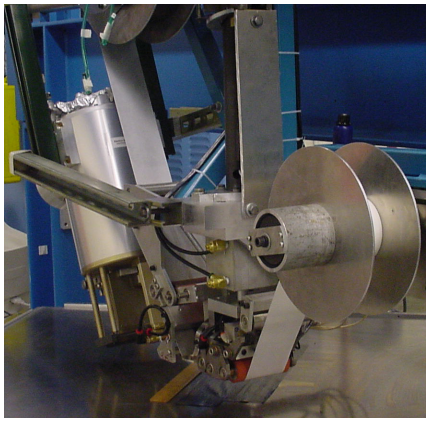

Figure 5: NASA Langley feeder head, focused IR lamp and e-beam gun

PLACEMENT QUALITY RIBBON AND TAPE

Technology for fabrication of a fully consolidated, dry unidirectional composite tape has been developed at NASA LaRC and at several industrial locations. The initial NASA LaRC process involved the preparation of powder-coated towpreg using a gravity-fed powder curtain process. The towpreg is passed through a tube furnace and onto air-cooled nip rollers to convert it to a dry, fully wet-out unitape [6]. A recent modification of this process starts with "wet" towpreg or tape prepared by coating fiber with an N-methylpyrrolidinone (NMP) solution of the polymer and drying to 12 percent volatiles. The remaining volatiles (solvent and any reaction products) are removed in the tube furnace. Solution-coating of fibrous tow bundles typically produces a more even resin distribution than powder coating, creating a better wet-out material [7]. The specifications for dry ribbon and tape are shown in Table 1 [8]. Tight equipment tolerances and proper resin melt flow are among the most important factors that are required to achieve tape with these specifications.

A hybrid carbon-boron tape has also been developed and used to fabricate composite laminates at NASA LaRC. This hybrid material, given the designation HYCARB, was fabricated by modifying the process for the manufacture of dry polymer matrix composite (PMC) tape from "wet" towpreg at LaRC. In this work, boron fibers were processed with IM7/ LaRC™ IAX poly(amide acid) solution-coated prepreg to form a dry hybrid tape for Automated Tow Placement (ATP). Boron fibers were encapsulated between two (2) layers of reduced volatile, low fiber areal weight poly(amide acid) solution-coated prepreg. The hybrid prepreg was then fully imidizied

and consolidated into a dry tape suitable for ATP [9].

The most important characteristic of a good quality dry material form is its ability to be robotically placed in a rapid manner ply-by-ply and achieve consolidation with the previously laid ply. During the lay-down process, resin melt flow must be adequate to achieve intimate contact, reptation bonding and healing with the previously laid ply. To accomplish this, placement is conducted at temperatures that correspond to a minimum in the melt viscosity, yet are below polymer thermal decomposition.

The standard method for measuring the interlaminar bond quality is the DCB test. This test requires a specimen thickness of between 3-5 millimeters which translates to 24-40 plies; further, specimen preparation and testing is time consuming. A rapid screening test, the wedge peel test, was developed which required a 2-ply-thick specimen and could be tested immediately upon placement [10]. A schematic of this test is shown in Figure 6. Correlation between the two tests was made so that the wedge peel test could be used to screen candidate ribbons and tapes for in-situ processability as well as help identify process windows and conditions for efficient placement. Typical wedge peel data is shown in Figure 7.

A study was conducted jointly with Cytec-Fiberite in which PIXA thermoplastic polyimide ribbon was prepared under conditions that yielded material with varying degrees of processability [8]. Laminates were fabricated at the lower and upper temperature extremes of the placement processing window using automated placement equipment both at Langley and at an industrial facility. DCB and wedge peel tests were used to determine the quality of the laminates and especially the interlaminar bond formed during the placement process.

Ribbon made under conditions expected to be non-optimal (overheated) resulted in poor placeability and composites with weak interlaminar bond strengths, regardless of placement conditions. Ribbon made under conditions expected to be ideal showed good processability and produced well-consolidated laminates. Results were consistent from machine to machine and demonstrated the importance of ribbon quality in heated-head placement of dry material forms.

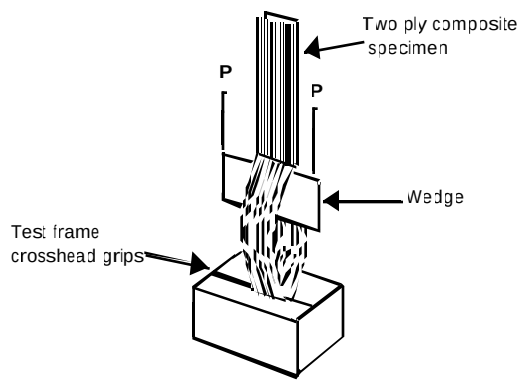

Figure 6: Schematic of wedge peel test

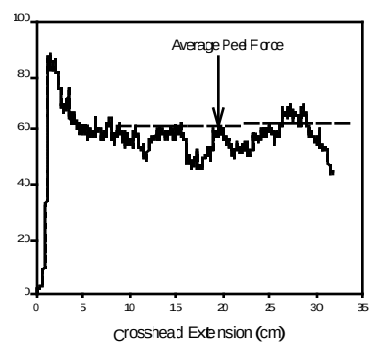

Figure 7: Typical wedge peel data showing average peel force value

Table 1: Dry tape and ribbon requirements

Width:	**0.635 +/- 0.0254 cm (ribbon)** **7.62 +/- 0.0254 cm (tape)**
Nominal Thickness:	**0.015 cm**
Thickness Variation:	**Less than 25% of total thickness**
Resin Content:	**35 +/- 5% by weight**
Void Volume:	**Less than 3% (when measured by "The Water Immersion Method for Determination of Void Content of Thermoplastic Fiber Impregnated Tow".)**
Tensile Strength:	**Measure and report only (ribbon only)**
Product shape:	**Rectangular cross-section (when inspected by photo micrograph)**
Tow Splits:	**Less than 0.076 cm wide, less than 7.62 cm long**
Tow Alignment:	**Less than 0.076 cm deviation in any linear foot**
Residual Solvent:	**Less than 0.01%**

Table 2: Open Hole Compression Strengths of Quasi-isotropic Composites

Process	**APC-2™ (PEEK/AS4)**	**APC-2™ (PEEK/IM6)**	**AURUM™ PIXA/IM7**	**LaRC PETI-5/ IM7**
Hand Lay-up/Autoclave (ksi)	**47**	**46**	**46**	**47**
Adv. Tow Placement (ksi)	**40**	**43**	**39**	**49 (autoclave post cure)**
% Retention	**85**	**93**	**85**	**104**

DEVELOPMENTAL ACTIVITIES

Composite Fabrication/Testing In-situ consolidated laminates have been prepared from high temperature polyimides such as AURUM™ PIXA/IM7, AURUM™ PIXA-M/IM7 and LARC™ PETI-5/IM7 and polyarylene ethers and sulfides such as APC-2™ (PEEK/AS4), APC-2™ (PEEK/IM6), PEKK/AS4 and PPS/AS4 [1]. It should be noted that lightly cross-linked material such as the LARC™ PETI-5/IM7 polyimide required a high temperature postcure to optimize performance. Open hole compression strengths at room temperature of some 24-ply PEEK, PIXA, and PETI-5 quasi-isotropic panels made by ATP on large industrial equipment are given in Table 2 and compared with properties obtained from panels made by hand lay-up/autoclave procedures. The ATP panels exhibited from 85 to 104 percent of the properties of composites made by hand lay-up/autoclave. These results indicate that heated head ATP technology can be used to effectively fabricate quality high performance composite materials.

Adhesive Bonding of Thermoplastic Ribbon During Placement High placement temperatures and pressures needed for thermoplastic require heavy, expensive tooling and slow placement speeds. To lower these placement parameters, ribbon was fabricated with a thin adhesive layer coated to the placement surface. The presence of this adhesive layer permitted placement at lower temperatures while retaining interlaminar wedge peel strength [11]. The dilemma is that the adhesive film with a Tg lower than that of the composite reduces the high temperature properties of the composite.

Placement of Thermoplastic Cylinder Using Focused IR Heated Head Fiber placement with the focused-infrared heated head was used to fabricate a high quality well consolidated 61 cm-diameter, 91cm-long APC-2™ (PEEK/AS4) graphite composite cylinder. The cylinder had an 8-ply quasi-isotropic lay-up (+45/-45/0/90/90/0/-45/+45) [12]. A photograph of the cylinder is shown in Figure 8. Roller sticking, a primary problem in earlier work with the gas torches, was eliminated because the roller could be operated at lower temperatures. Steel compaction rollers were machined to match the curvature of the cylinder for 0°, 45° and 90° placement. Photomicrographs of the cylinder wall cross-section indicated very good interlaminar bonding (Figure 9), however, numerous dry, voidy and poorly wet-out areas were also observed which were present in the as-purchased tape and could not be healed during the placement process. This confirms the need to prepare good quality starting material and not depend on the lay-down process to correct material form imperfections.

Figure 8: Heated head tape-placed APC-2 cylinder

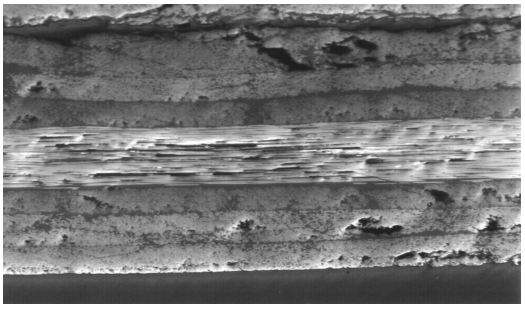

Figure 9: Photomicrograph of the cross-section of an as-placed 8-ply APC-2 cylinder wall

Modest built-up structure, including 2m by 3m panels with 3 attached stringers and 2m by 3m sandwich panels with titanium core, have been fabricated from various polyimides using industrial ATP equipment and 7.62 cm-wide tape. These parts were made as part of a cooperative program between NASA Langley and industry to develop heated head robotic placement technology for aerospace applications.

E-beam Cured Composite Fabrication E-beam COTF processing was successfully demonstrated at BREL. An approximately 1 ft. by 1 ft. panel with ply orientations of [0, +45°, -45°, 90] was tape placed and electron-beam cured as an in-situ process. This panel was fabricated and cured from a

remote location approximately 150 ft. from the location of the ATP-EB equipment. The process was continuous from start to finish and no operator intervention was required. Although the panel was of poor quality, it did demonstrate that the new equipment is capable of laying and curing composite tape in a simultaneous process [5]. It is noted that the E-beam COTF process has not been adequately developed for fabrication of high quality composite panels. Further process development for optimization of process parameters will be necessary for fabrication of high quality laminates.

ATP of Composites with Film Interleaf Layers The incorporation of thin discrete layers of resin between plies (interleafing) has been shown to improve fatigue and impact properties of structural composite materials. Furthermore, interleafing could be used to increase the barrier properties of composites used as structural materials for cryogenic propellant storage. Robotic heated-head tape placement of PEEK/IM7 (supplied by Cytec Fibertite and manufactured by their proprietary 'TIFF' process) composites containing a PEEK polymer film interleaf was investigated. These experiments were carried out at the NASA Langley Research Center automated fiber placement facility. Using the robotic equipment, an optimal fabrication process was developed for the composite without the interleaf. Preliminary interleaf processing trials indicated that a two-stage process was necessary; the film had to be tacked to the partially-placed laminate then fully melted in a separate operation. Screening experiments determined the relative influence of the various robotic process variables on the peel strength of the film-composite interface [13]. A photomicrograph of an interleaved ATP composite specimen is shown in Figure 10.

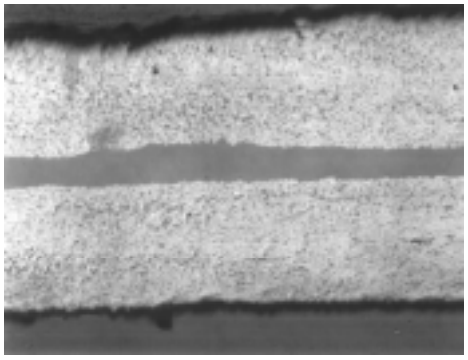

Figure 10: Photomicrograph of 4-ply peel specimen with a PEEK interleaf of .0069 cm thick.

Optimization studies were performed in which peel specimens were fabricated at various compaction loads and roller temperatures at each of three film melt processing rates. The resulting data were fitted with quadratic response surfaces. Additional specimens were fabricated at placement parameters predicted by the response surface models to yield high peel strength in an attempt to gage the accuracy of the predicted response and assess the repeatability of the process. The overall results indicate that quality PEEK/IM7 laminates having film interleaves can be successfully and repeatability fabricated by heated head automated fiber placement [13].

FUTURE ACTIVITIES

Future activities directed toward achieving the goal of automated fabrication of high performance composites will include:

- development of sensors for on-line part quality information and in-situ defect repair;
- automated placement of metal-composite hybrids using magnetic induction heating;
- development of conformable compactors for ply drops, ply adds, and complex geometry;

• development of non-autoclave processes for epoxy thermosets including net shape placement combined with ply-by-ply, cure-on-the-fly.

In pursuit of the latter, modified resins are being investigated with new cure mechanisms such as electron beam radiation and low temperature thermal pulses. These resins have to be tailored for rapid, automated fabrication and their cure mechanisms understood and modeled.

CONCLUDING REMARKS

The "ultimate goal" for composite manufacture is to reproducibly and economically fabricate high quality parts that have the proper dimensions and performance properties for a selected design end use. Automation will be part of the answer as will non-autoclavability. Robotic laboratories such as described in this paper are needed by researchers to create, study and optimize prototype processes. These labs should be flexible and broadly adaptable to screen a variety of new approaches as well as to develop and investigate new constituent materials, material forms, and cure mechanisms. Transfer of the best technology from such laboratories to industrial partners for scale-up and further tailoring should be relatively easy and efficient and will make the road to the "ultimate goal" smoother and shorter.

REFERENCES

1. Johnston, N. J.; Towell, T. W.; Marchello, J. M. and Grenoble, R. W.; "Automated Fabrication of High Performance Composites: An Overview of Research at the Langley Research Center", *Eleventh International Conference On Composite Materials*, Gold Coast, Australia, July 14-18, 1997. Proceedings, Vol. 4, 1997, pp. 85-91.

2. Towell, T. W.; Johnston, N. J.; Grenoble, R. W.; Marchello, J. M. and Cox, W. R.; "Thermoplastic Fiber Placement Machine for Materials and Processing Evaluations", *Sci. Adv. Matl. Process Eng. Series*, Vol. 41, 1996, pp. 1701-1711.

3. Grenoble, R. W.; Tiwari, S. N.; Marchello, J. M. and Johnston, N. J.; "Hybrid IR-Gas Heater for Automated Tow Placement", *Science of Advanced Materials and Process Engineering Series*, Vol. 43, 1998, pp. 1966-1978.

4. Messier, B. C.; Marchello, J. M.; Hinkley, J. A. and Johnston, N. J.; "Induction Bonding of Prepreg Tape and Titanium Foil", *Science of Advanced Materials and Process Engineering Series*, Vol. 43, 1998, pp. 1394-1408.

5. Burgess, J. W.; Wilenski, M. S.; Belvin, H. L.; Cano, R. J. and Johnston, N. J.: Development of a Cure on the Fly Automated Tape Placement Machine for Electron Beam Curable Prepregs, *46th SAMPE Symposium*, Long Beach, CA May 6-10, 2001.

6. Belvin, H. L.; Cano, R. J.; Grenoble, R. W. and Marchello, J. M.; "Fabrication of Composite Tape from Thermoplastic Powder-Impregnated Tows", *Internatl. SAMPE Tech. Conf. Series*, Vol. 28, pp. 1996, 1309-1316.

7. Belvin, H. L.; and Cano, R. J.: "Fabrication of Dry Thermoplastic Polyimide Tape From Solution-Coated Prepreg", *Proceedings of Fifth International Conference on Composites Engineering*, Las Vegas, Nevada, Vol. 1, 1998, p. 73.

8. Hulcher, A. B.; Marchello, J. M.; Hinkley, J. A.; Johnston, N. J. and Lamontia, M. A.; "Dry Ribbon for Heated head Automated Fiber Placement", *Science of Advanced Materials and Process Engineering Series*, Vol. 44, 1999.

9. Belvin, Harry L.; Cano ,Roberto J.; Treasure, Monte; and Shawhood ,Thomas W.; Fabrication of Carbon Reinforced Dry Polymer Matrix Composite Tape, *31st SAMPE Technical Conference, October 27-31, 1999* , *Chicago, IL*, 31, pp 329-340

10. Hulcher, A. B.; Marchello, J. M.; and Hinkley, J. A.; "Correlation Between Double Cantilever Beam and Wedge Peel Tests for Automated Tow Placement", *Science of Advanced Materials and Process Engineering Series*, Vol. 43, 1998, pp. 1955-1965.

11. Grenoble, R. W.; Messier, B. C.; Marchello, J. M.; Belvin, H. L. and Johnston, N. J.; "Adhesive Bonding of Composite Ribbon During Automated Tow Placement", *International SAMPE Technical Conference Series*, Vol. 29, 1997, pp. 98-107.

12. Hulcher, A. B.; Maters Thesis, Old Dominion University, May 2000.

13. Hulcher, A. B.: Banks, W. I.; Pipes, R. B.: Tiwari, S. N.; Cano, R. J. and Johnston, N. J.; Automated Fiber Placement of PEEK/IM7 Composites with Film Interleaf Layers , *46th SAMPE Symposium*, Long Beach, CA May 6-10, 2001