NASA CONTRACTOR REPORT

NASA CR-1482

NASA CR-1482

FORMULATION ON STATISTICAL TRAJECTORY ESTIMATION PROGRAMS

by William E. Wagner and Arno C. Serold

Prepared by
MARTIN MARIETTA CORPORATION
Denver, Colo.
for Langley Research Center

NATIONAL AERONAUTICS AND SPACE ADMINISTRATION • WASHINGTON, D. C. • JANUARY 1970

NASA CR-1482

FORMULATION ON STATISTICAL TRAJECTORY ESTIMATION PROGRAMS

By William E. Wagner and Arno C. Serold

Distribution of this report is provided in the interest of information exchange. Responsibility for the contents resides in the author or organization that prepared it.

Prepared under Contract No. NAS 1-8500 by
MARTIN MARIETTA CORPORATION
Denver, Colo.

for Langley Research Center

NATIONAL AERONAUTICS AND SPACE ADMINISTRATION

For sale by the Clearinghouse for Federal Scientific and Technical Information
Springfield, Virginia 22151 – Price $3.00

FOREWORD

This report describing the formulation of the Statistical Trajectory Estimation Programs is provided in accordance with Part IV.A.4 of NASA Contract NAS 1-8500. An additional report describing utilization of these programs is presented in NASA CR-66837.

This work was conducted for NASA Langley Research Center under the direction of Robert J. Mayhue (Technical Monitor), Sherwood Hoffman (Alternate Monitor), both of the Applied Materials and Physics Division, and George B. Boyles (Computer Analyst) of the Analysis and Computation Division.

CONTENTS

		Page
FOREWORD		iii
SUMMARY		1
I.	INTRODUCTION	1
II.	SYMBOLS AND ABBREVIATIONS	7
III.	MATHEMATIC THEORY	16
	A. Linearization	17
	B. Batch Processing Algorithms	18
	C. Recursive Processing Algorithms	21
	D. Uncertain Model Parameters	24
	E. Computational Procedures	28
	F. Transition Matrices	32
IV.	NONLINEAR EQUATIONS OF MOTION	34
	A. Axes Systems	34
	B. Translational Equations of Motion	36
	C. Rotational Equations of Motion	38
	D. External Accelerations	46
	E. Atmosphere Model	51
	F. STEP1 and STEP2 Dynamic Models	54
	G. STEP1 and STEP2 Error Models	59
	H. STEP State Variable Dependency	64
V.	LINEARIZED EQUATIONS OF MOTION	66
	A. STEP2 Linear Equation Coefficients	67
	B. STEP1 Linear Equation Coefficients	73
VI.	AUXILIARY TRANSFORMATIONS	82
	A. Option 1 Transformation	83
	B. Option 2 Transformation	89
VII.	MEASUREMENT EQUATIONS	96
	A. Radar Tracking (STEP1 and STEP2)	96
	B. Accelerometers (STEP1)	106
	C. Airborne Radar	110
	D. Position and Velocity	118
VIII.	NUMERICAL PROCEDURES	119
	A. Numerical Integration	119
	B. Matrix Inversion	119
	C. Interpolation	120
	D. Iteration	120
IX.	PROGRAM APPLICATIONS AND USE	121
	A. Operating Modes	121
	B. Program Applications	124
	C. Data Conditioning	125

		Page
X.	REFERENCES AND BIBLIOGRAPHY	127
	A. References	127
	B. Bibliography	130 thru 134
Figure		
1	Schematic of Recursive Filtering Logic	29
2	Schematic of Earth Model	35
3	Axes Orientation	40
4	Vehicle Attitude Angles	49
5	Molecular Scale Temperature Altitude Profile . .	51
6	Radar Tracking Schematic	97
7	Airborne Radar Schematic	111
Table		
1	1959 ARDC Atmosphere Temperature Profile	53
2	1962 U. S. Standard Atmosphere Temperature Profile	53
3	Atmosphere Accuracy Comparison	55
4	Coefficients in STEP2 Linear Equations of Motion	68
5	Coefficients in STEP1 Linear Equations of Motion	74
6	Input/Output Variables	82
7	Input Transformation for Option 1 Variables . .	87
8	Output Transformation for Option 1 Variables . .	88
9	Input Transformation for Option 2 Variables . .	93
10	Output Transformation for Option 2 Variables . .	94
11	Radar Tracking Error Coefficients	99

FORMULATION ON STATISTICAL TRAJECTORY ESTIMATION PROGRAMS

By William E. Wagner and Arno C. Serold
Martin Marietta Corporation

SUMMARY

This report documents the theory, equations, and numerical techniques in the Statistical Trajectory Estimation Programs (STEP1 and STEP2). These programs were originally developed and used on the U.S. Air Force Precision Recovery Including Maneuvering Entry (PRIME) Program to perform the postflight trajectory reconstruction and analysis of the SV-5D maneuverable lifting reentry vehicle. They have since been considerably improved under NASA Contract NAS1-8500.

STEP uses the recursive Kalman minimum variance filtering algorithms to fit the equations of motion to trajectory measurement data. The programs are formulated to process position radar tracking and airborne gyro and accelerometer measurements. The equations of motion account for three dimensional trajectories in the vicinity of an oblate rotating planet. Vehicle maneuvers in pitch, roll, and yaw within the atmosphere are acceptable. STEP1 is restricted to nonthrusting vehicles; STEP2 is applicable to any vehicle recording accelerations, inertial angular rates, and having at least partial radar coverage.

In addition to postflight reconstruction, the programs can be used to solve preflight trajectory simulation and error analysis problems.

I. INTRODUCTION

The postflight data analysis task is a vital part of all scientific space missions. The success of any planetary space mission depends on the amount of information retrieved from the measurements taken. Certainly the enormous costs required to design, construct, instrument, fly, and support of flights of space vehicles justifies a significant expenditure of effort in analyzing the measurements taken.

The problem to which we address ourselves here is the accurate determination of the trajectory, subsystem performance, and atmospheric characteristics of a flight vehicle from data sensed during the flight. The information assumed to be at our disposal for performing such analysis includes ground- or ship-based position radar or optical tracking, airborne accelerometer, and gyro data.

The process of using these measured data to perform the reconstruction is called trajectory estimation. Webster defines estimation as an approximate calculation. In fact, the trajectory estimation process is nothing more than using the only information available (airborne and ground-based sensor data) to approximately calculate the position and velocity of the vehicle. How well this approximation agrees with the vehicle's actual position and velocity may never be exactly known, but can be estimated. Thus, the second approximate calculation concerns the accuracy of the trajectory estimate.

In the past, two basic concepts have been used to reconstruct trajectories in the Earth's atmosphere. The first consists of using radar or optical tracking data to determine vehicle position (refs. 1 and 2). The velocity is determined from Doppler measurements and/or by numerically differentiating the position data. The second technique consists of integrating the airborne accelerometer and gyro data. Double integration of the accelerations yields the position/time history. The accelerometers are oriented during the integrations via the integrated gyro data. The first method, using radar data, requires continuous radar coverage, yields no vehicle attitude information, and, if numerica differentiation of position data is used, can produce inaccurate velocity information. The second method, using accelerometer and gyro data, requires accurate information concerning initial position, velocity, and attitude to commence the integration. Further more, errors propagate rapidly as a result of initial condition errors or systematic errors in the data.

There are many variations of these two basic methods. Having determined the trajectory, and assuming the aerodynamic coefficients known from preflight analyses, the measured accelerations yield the atmospheric density from the equation $\rho = -\left(2m\ a_{XB}\right) / \left(V_A^2\ S\ C_A\right)$. Assuming a gravitational acceleration known, the hydrostatic equation, $dp = -\rho g\ dh_o$, can be integrated to yield the pressure/time history. The assumption is usually made that the atmosphere is adiabatic (temperature a linear function of

altitude) or isothermal (temperature constant), thus permitting explicit integration of the hydrostatic equation. Knowing the pressure, the equation of state $\rho = (M_o\ p)/(R^*\ T)$ can be used to determine the temperature (ref. 3). Such techniques are called deterministic because the number of variables to be determined equals the number of discrete measurements used.

The reconstruction technique described herein is specifically oriented toward using statistical estimation theory to reconstruct trajectory, atmospheric, and aerodynamic characteristics. The use of estimation theory to determine trajectory characteristics is not new. Over the past 10 years, numerous investigators have used estimation theory to determine orbits of satellites (ref. 4 thru 7). However, the application of estimation theory to in-atmosphere flight is relatively new and not without many unresolved difficulties. In orbital and interplanetary space, the principal forces acting on spacecraft are gravitational and are accurately represented mathematically; however, the principal forces acting on in-atmosphere vehicles are aerodynamic and are rather imprecisely characterized mathematically. Furthermore, in the atmosphere the trajectory is predominantly influenced by the vehicle's attitude, which, in turn, is governed by complex guidance and autopilot systems through fins, flaps, or other external devices. Thus, the principal difficulty in applying estimation theory to in-atmosphere problems lies in formulating the dynamic model.

The statistical trajectory estimation problem can be described as follows. Given a dynamic model consisting of the equations of motion that describe the flight of a vehicle through the atmosphere. These equations of motion characterizing this model can be written as ordinary first-order nonlinear differential equations. There are a total of 12 equations -- three translational dynamic equations that balance external forces and yield the velocity vector, three translational kinematic equations that yield position, three rotational dynamic equations that balance external torques and yield the inertial angular rate vector, and three rotational kinematic equations that yield angular orientation or attitude. If 12 initial conditions are specified for the dependent variables, the equations can be integrated in time to yield a trajectory. At any instant of time, the range (R), azimuth (A), and elevation (E) from the vehicle to a tracking radar can be determined from three algebraic equations that yield R, A, and E as functions of the instantaneous position of the vehicle, which, in turn, is a function of the initial conditions from which the equations of motion were integrated. Other sensor

data can similarly be calculated, but for simplicity, we will limit this discussion to R, A, and E.

The trajectory estimation problem is the inverse of that just described. Given the tracker R, A, E time history, we can determine the initial conditions that yield a trajectory satisfying the given R, A, E time history. Given exactly 12 R, A, E versus time points, we could deterministically solve for the 12 initial conditions to yield a trajectory that exactly satisfies the 12 R, A, E points. Given more than 12 R, A, E points, however, we have an overdetermined problem (more requirements than variables to solve for) and must resort to regression analysis. One of the simplest methods would be to determine the 12 initial conditions that cause the sum of the squares of the residuals between the measured R, A, E points and the calculated R, A, E points to be minimum. This would be a least-squares solution. Because some measurements are better than others, one might weight the residuals by the inverse of their standard deviations and obtain a weighted least-squares solution. Weighting the data by the inverse of its covariance matrix yields a minimum variance solution. For uncorrelated data, the minimum variance and weighted least-squares solutions are the same. STEP uses linear filter theory to recursively obtain the minimum-variance (or weighted least squares) solution for uncorrelated data. The general theory underlying the filter application is presented in Section III.

The difficulty in applying the technique just described lies in formulation of the equations of motion. For example, in the three rotational dynamic equations that balance external torques, all guidance and autopilot functions that steer engines, flaps, fins, gas jets, etc., must be properly described mathematically. Furthermore, all aerodynamic and thrust moments must be accurately described. Accurate representation of all torques is difficult because of all the uncertainties involved. Therefore, the STEP models omit the three rotational dynamic equations and use instead the inertial angular rates measured by airborne gyros aboard the vehicle. Systematic error in these rates is accounted for in the modeling (e.g., gyro misalignment, scale factor, random bias, g-bias, and anisoelastic drift). Thus, we have a STEP1 formulation that contains the nine equations of motion but requires inertial angular rate histories. Solutions of its dynamic model satisfy the inertial angular rate data exactly. STEP1 fits the dynamic model to position radar tracking data as well as airborne accelerometer data.

The major difficulty in STEP1 is that of accurately representing the external aerodynamic accelerations acting on the vehicle and required in the three translational dynamic equations. The aerodynamic acceleration representation requires accurate modeling of aerodynamic coefficients, atmospheric density, and vehicle mass, which are usually not known precisely. Thus, the STEP2 model omits the external acceleration representation by using the airborne accelerometer measurements directly in the translational dynamic equations of motion. Systematic error in the accelerometer data is accounted for in the modeling. STEP2 fits its dynamic model to the position radar tracking data only.

We see that both STEP1 and STEP2 determine the nine initial conditions (three velocity, three position, three attitude) from which the equations of motion must be integrated to satisfy the tracking measurements (and accelerometer measurements for STEP1) in a minimum-variance sense. The nonlinear equations of motion in the original STEP models as well as the minimum-variance filter theory are presented in reference 8. The detailed equations of motion in the current programs are described in Section IV. The equations that characterize the measurements to which the equations of motion are fit are presented in Section VII. The primary difference between the original STEP formulation (ref. 8), and that described herein is in the form of the equations of motion. In the original formulation the state variables in the dynamic equations of translation were the relative velocity, path angle, and heading angle. The state variables in the kinematic equations of rotations were the roll angle about the velocity vector, angle of attack, and sideslip angle. The formulation had the advantage of yielding state variables of practical interest to the user but had the disadvantage of being cumbersome and possessing singularities. In the formulation reported herein, the velocity is integrated in inertial Cartesian components and the attitude is characterized by a four parameter system of Euler parameters. The dynamic model has thus been significantly simplified, but now the state variables have little practical utility to the user. Therefore, optional forms of input and output have been provided to permit the user to work with more familiar variables. These input/output transformations are presented in Section VI.

Other parameters in the equations of motion can be estimated just as the initial conditions are. For instance, biases can be included in the modeling of the aerodynamic coefficients. If the time variations of such biases can be described by differential

equations, the differential equations can be added to the equations of motion and the bias estimated along with the other initial conditions. Otherwise, the biases must be assumed constant over the trajectory, the constant value being estimated along with the initial conditions. The improved STEP models include 150 such systematic error sources modeled on the accelerations, inertial angular rates, aerodynamic coefficients, density, center of gravity, atmospheric winds, mass, and tracking radar measurements.

II. SYMBOLS AND ABBREVIATIONS

A, A_c, A_M	azimuth of radar tracker. A_c is calculated without systematic error, equation (238b), A_M is modeled or measured with systematic error, equation (239)
a	acceleration relative to planet surface, equation (57)
a_i	parameters in the airborne radar equation, equation (277)
a_{XB}, a_{YB}, a_{ZB}	accelerations acting through center of gravity in body axes directions
a_{XG}, a_{YG}, a_{ZG}	acceleration modeled or measured at inertial measuring unit in body axes directions with systematic error included
a_{XP}, a_{YP}, a_{ZP}	acceleration at inertial measuring unit in body axes directions without systematic error
$\bar{a}_P$	anisoelastic error model parameter, equation (155)
B	orthogonal transformation matrix used in quaternion development, equation (72)
b_i, b_{ij}	parameters used in input transformation defined in equation (228)
C	matrix inverse defined in equation (266)
C_i	modeled error coefficient defined in equations (147) to (159), and equations (239)
Cov( )	covariance operator
c_i	parameters in airborne radar equations, defined in equations (276)
c_s	speed of sound, equation (125)
C_{uz}	Correlation between the model parameter errors u and expanded state variable errors z, see equation (50)
C_{vz}	Correlation between the measurement parameter errors v and edpanded state variable errors z, see equation (50)

D	determinent defined in equation (265)
D	covariance of model parameters U, equation (41)
D_i	parameters in output transformation defined in equation (232)
d_i	parameters in input transformation defined in equation (227)
E, E_c, E_M	elevation angle of radar tracker. E_c is calculated without systematic error, equation (238c), E_M is modeled or measured with systematic error, equation (239)
$\varepsilon(\ )$	expectation operator
e	unit vector designation
e_0, e_1, e_2, e_3	Euler parameters, equations (79) and (101)
e_{ij}	parameters in input transformations, defined in equations (218)
F	external force vector
F_{XG}, F_{YG}, F_{ZG}	components of external force vector in G-frame axes, equation (63)
F	coefficient matrix of linear differential equations of motion, equation (3)
f	nonlinear equations of motion, equations (1) and (45)
G	coefficients of linearized measurement equations, equation (4)
G	proportionality factor used in equations (123), depending on units of H, i.e. $GdH = g(h_o)dho$, where $g(h_o)$ is the acceleration of gravity
G	transformation matrix between G-frame and B-frame, defined in equation (79)
g	nonlinear measurement equations, equations (2)

g_{ij}	elements of transformation matrix G
H, H_B	geopotential attitude and base points for atmosphere calculations, equation (121)
H	partial derivative of measurement equations with respect to measurement parameters V, equation (51b)
h, h_o	altitude of vehicle above spherical planet and oblate planet
h_I, h_O	input and out transformation functions defined in equations (207a) and (209a)
h_T	altitude of tracking station above oblate planet, equation (236)
I	identity matrix
J	parameter in minimum variance equations, equations (53f)
J, J_2	coefficient of second gravitational harmonic, equation (105)
K	optimal linear gain, equation (53e)
L_M	slope of molecular scale temperature versus altitude profile, equation (122)
ℓ	vehicle reference length used in calculating Reynolds number, equation (148)
l	number of components in W vector, equation (41)
l_B, m_B, n_B	
l_G, m_G, n_G	direction cosines defined in equations (269) and (270)
M_o	molecular weight of the atmosphere at sea level, equation (123)
M	Mach number, equation (143)

M	transformation matrix in quaternion development defined in equation (74)
m	vehicle mass
m_M	modeled mass time history, equation (149)
N_I, N_O	matrices for performing input and output transformation of covariance and correlation matrices, equations (208) and (210)
P, P_M	inertial angular rate about roll axis without and with systematic error, equation (154)
P	covariance matrix of state or expanded state errors, equations (21), (53b), and (54b)
p, p_B	atmospheric pressure and base pressures in atmosphere calculations, equation (123)
PRIME	Precision Recovery Including Maneuvering Entry
Q, Q_M	inertial angular rate about pitch axis without and with systematic error, equation (154)
q	quaternion defined in equation (65)
q	dynamic pressure, equation (142)
q	number of components in U vector, equation (41)
R, R_c, R_M	range of radar tracker, R_c, is calculated without systematic error, equation (238a), R_M is modeled or measured with systematic error, equation (239)
R, R_M	inertial angular rate about the yaw axis without and with systematic error, equation (154)
R^*	universal gas constant, equation (123)
R_A, R_E, R_P	average, equitorial and polar planet radius
R_o	radius of oblate earth at latitude φ, equation (145)

R_e	Reynolds number, equation (148)
R_R	slant range for airborne radar, equation (273)
R_{XB}, R_{YB}, R_{ZB}	
R_{XG}, R_{YG}, R_{ZG}	components of airborne radar range vector in B-frame and G-frame
r	radial distance from planet center to vehicle, equation (63); also used as position vector from planet center to vehicle, equation (56)
r_r	radial distance from planet center to tracking station, equation (236)
r	number of components in V vector, equation (44)
S	covariance of matrix V, equation (45)
S	vehicle reference area for aerodynamic coefficients, equation (110)
S	vector used in quaternion development (see fig. 3)
S	Sutherland coefficient in equation (126)
s	sum of squares of residuals in equation (13)
STEP	Statistical Trajectory Estimation Programs
T	temperature
T	transformation matrix for aerodynamic coefficients in equation (196)
T_M, T_{MB}	molecular scale temperature and base points, equations (122)
t	time
V, V_o, u	uncertain model parameter vector in the equations of motion, its mean value, and perturbation, equation (49)

u, v, w	components of inertial velocity in G-frame axes, equations (62) and (63)
u_A, v_A, w_A	components of relative velocity in the G-frame axes, equation (114)
u_B, v_B, w_B	components of relative velocity in B-frame axes, equation (116)
u_w, v_w	components of horizontal wind vector from the north and east, respectively, equation (152)
V, V_o, v	uncertain measurement parameter vector, its mean value, and perturbation, equation (49)
V	velocity relative to planet surface, equation (57)
V_A	velocity relative to atmosphere, equation (141)
W, w	model and measurement parameters to be estimated and their perturbations, equation (41)
X, x, x	state vector, its perturbation and best estimate of perturbation, equations (1), (6a), and (14)
x_p, y_p, z_p	corrected distance from the center of gravity to the inertial measuring unit (accelerometers) measured along the B-frame axes; positive for the IMU forward, starboard, and below the center of gravity, see equation (153)
x_s, y_s, z_s	Cartesian components of tracker range vector, see figure 6 and equation (235)
Y, y	measurement vector and perturbations, equation (2) and (4)
y_M	measurement residual vector defined in equation (12) with components defined in equation (9)
z, z, z	expanded state vector include both state and model parameters to be estimated, its perturbation, and best estimate of perturbation, equations (48), (49), and (53a)

Greek

α, β	angle of attack and sideslip angle, degrees
β	Sutherland coefficient in equation (126)
γ	specific heat ratio, equation (125)
γ_A	flightpath angle of velocity vector relative to atmosphere, equation (219)
γ_R	pitch angle of body fixed radar, see equation (271b) and figure 7, degrees
δ	noise vector on measurements, equations (10)
ϵ	incremented quaternion, equations (84) thru (87)
ζ	dummy variable used in Sections V and VII for state variable components and model parameters C_i
ζ, η, ξ	angular orientation of S vector relative to G-frame in figure 3
η	total resultant angle of attack, see figure 4, degrees
Θ	difference between vehicle longitude and tracking station longitude, equation (236)
Θ	difference between vehicle longitude and the longitude of the airborne radar slant range vector/planet surface intersection, equation (274)
θ	longitude of vehicle, figure 2
θ_T	longitude of tracking station, figure 5
θ	parameter transition matrix, equation (52)
$\overline{\theta}$	Euler angle in pitch, equations (212) thru (217), degrees
Λ	matrix abbreviation defined in equation (13)
λ_A	azimuth of velocity vector relative to atmosphere, equation (219)

λ_R	azimuth of airborne radar vector, see equation (271a) and figure 7
μ	coefficient of the first harmonic of gravity, equation (105)
μ_A	atmospheric viscosity, equation (126)
μ	rotation in quaternion development, equation (74) and figure 3
ξ	steering angle, see figure 4, degrees
ρ, ρ_M	atmospheric density after and before error model corrections, equation (151)
Σ	batch processing weighting matrix, equation (16)
σ	roll angle about the velocity vector, figure 4, degrees
σ_i, σ_{ij}	standard deviation and correlation coefficient, equation (18)
σ^2	covariance or weighting matrix of measurement data point, equation (16)
τ	time difference in mass error model, equation (150)
Φ	difference between geodetic and geocentric latitude at the tracking station, equation (236)
φ	latitude
φ	state transition matrix, equations (7)
φ_D	geodetic latitude
φ_T, φ_{DT}	geocentric and geodetic latitude of tracking station, equation (237)
$\overline{\varphi}$	Euler angle in roll, equation (212) thru (217), degrees
$\overline{\psi}$	Euler angle azimuth, equation (212) thru (217), degrees

Ω_B, Ω_G, Ω_{BG}	angular rate of B-frame and G-frame relative to inertial space, and angular rate of B-frame relative to G-frame, equation (96)
Ω_P	angular rotation rate of planet about e_{ZI} axis relative to inertial space, equation (96)
ω_{ij}	abbreviation for cofactors in equation (264)

Subscripts

$(\ )_A$	relative to the atmosphere in STEP1 or planet surface in STEP2
$(\ )_B$	refers to B-frame or base points in atmosphere description
$(\ )_C$	calculated, does not include systematic error
$(\ )_G$	refers to G-frame
$(\ )_I$	refers to point of intersection of airborne radar slant range vector and planet surface
$(\ )_M$	either measured or modeled to characterize a measurement
$(\ )_{OBL}$	pertains to planet oblateness
$(\ )_P$	refers to inertial measuring unit
$(\ )_R$	refers to airborne radar
$(\ )_{REF}$	corresponds to reference trajectory
$(\ )_S$ or $(\ )_T$	refers to tracking station
$(\ )_{x,\ y,\ \text{or}\ z}$	corresponds to x, y, or z axis directions

III. MATHEMATICAL THEORY

Given a dynamic model consisting of ordinary first-order nonlinear differential equations of motion that describe the flight of a vehicle through the atmosphere,

$$\dot{X}(t) = f[X(t),t] \tag{1}$$

If initial conditions are specified for the dependent (state) variables, X, the equations can be integrated in time to yield a trajectory. At any instant of time the range, (R), azimuth (A), and elevation (E) from the vehicle to a tracking radar can be determined from three algebraic equations that yield R, A, and E as functions of the instantaneous position of the vehicle.

$$Y(t) = g[X(t),t] \tag{2}$$

The R, A, and E at any time are, therefore, functions of the initial conditions from which the equations of motion were integrated. Other sensor measurements (e.g., accelerometer, gyro, pressure, temperature, etc.) can similarly be calculated from equations of the form of equation (2).

The trajectory estimation problem is the reverse of that just described. Given the radar tracking data $Y_M(t_i)$ at the discrete times $i = 1, 2, \ldots, n$, determine the initial conditions that yield a trajectory satisfying the $Y_M(t_i)$ data. Given exactly 12 scalar data points $Y_M(t_i)$, we can deterministically solve for the 12 initial conditions that yield a trajectory exactly satisfying the 12 $Y_M(t_i)$ data points. Given more than 12 data points, however, we have an overdetermined problem (more requirements than parameters to solve for) and must resort to regression analysis. One of the simplest methods is to determine the initial conditions that cause the sum of the squares of the residuals between the measured data $Y_M(t_i)$ and that calculated via equation (2), $Y(t_i)$, to be minimum. This would be a least-squares solution. Generalizing X to be an m-component state vector and Y to be a p-component measurement vector, we will proceed to develop such a least-squares solution.

A. Linearization

To obtain such a least-square solution, one must first linearize equations (1) and (2) to obtain:

$$x(t) = F(t)\ x(t) \tag{3}$$

$$y(t) = G(t)\ x(t) \tag{4}$$

where

$$x(t) = X(t) - X_{REF}(t) \tag{5a}$$

$$y(t) = Y(t) - Y_{REF}(t) \tag{5b}$$

and

$$F(t) = \begin{bmatrix} \frac{\partial f_1}{\partial x_1} & \frac{\partial f_1}{\partial x_2} & \cdots & \frac{\partial f_1}{\partial x_m} \\ \frac{\partial f_2}{\partial x_1} & \frac{\partial f_2}{\partial x_2} & \cdots & \frac{\partial f_2}{\partial x_m} \\ \vdots & & & \vdots \\ \frac{\partial f_m}{\partial x_1} & \frac{\partial f_m}{\partial x_2} & \cdots & \frac{\partial f_m}{\partial x_m} \end{bmatrix}_{REF} \tag{6a}$$

$$G(t) = \begin{bmatrix} \frac{\partial g_1}{\partial x_1} & \frac{\partial g_1}{\partial x_2} & \cdots & \frac{\partial g_1}{\partial x_m} \\ \frac{\partial g_2}{\partial x_1} & \frac{\partial g_2}{\partial x_2} & \cdots & \frac{\partial g_2}{\partial x_m} \\ \vdots & & & \vdots \\ \frac{\partial g_p}{\partial x_1} & \frac{\partial g_p}{\partial x_2} & \cdots & \frac{\partial g_p}{\partial x_m} \end{bmatrix}_{REF} \tag{6b}$$

Note that equations (3) and (4) govern perturbations between the solution $X(t)$, $Y(t)$ and a reference solution $X_{REF}(t)$, $Y_{REF}(t)$, which satisfies equations (1) and (2). A known solution to equation (3) is $\phi(t_i,t_j)$ called the state transition matrix. This solution possesses the following properties (ref. 9):

$$\frac{d\phi(t,t_0)}{dt} = F(t)\ \phi(t,t_0) \tag{7a}$$

$$\phi(t,t) = I \quad \text{for all } t \tag{7b}$$

$$\phi\left(t_2,t_0\right) = \phi(t_2,t_1)\ \phi(t_1 t_0) \tag{7c}$$

$$x(t) = \phi(t,t_0)\ x(t_0) \tag{7d}$$

Properties (7a) and (7b) suggest that $\phi(t,t_0)$ can be obtained by integrating the perturbation equations, equations (3), from identity initial conditions at time t_0.

B. Batch Processing Algorithms

Substituting property (7d) into equation (4) yields

$$y(t) = G(t)\ \phi(t,t_0)\ x(t_0) \tag{8}$$

which relates perturbations from the reference measurement at time t to perturbations from the reference state at time t_0. Assuming that $X(t)$ and $Y(t)$ are the desired "best estimated values," then

$$y_M(t_i) = Y_M(t_i) - Y_{REF}(t_i) \tag{9}$$

is the perturbation between the actual measurement and reference measurement at time t_i and should differ from $y(t_i)$ by an amount $\delta(t_i)$ the noise in the measured data

$$\begin{aligned} y_M(t_i) &= G(t_i)\ \phi(t_i,t_0)\ x(t_0) + \delta(t_i) \\ i &= 1, 2, \ldots, n \end{aligned} \tag{10}$$

Considering all n measurement equations we can write

$$y_M = \Lambda\, x(t_0) + \delta \tag{11}$$

where

$$y_M = \begin{bmatrix} y_M(t_1) \\ y_M(t_2) \\ \cdot \\ \cdot \\ \cdot \\ y_M(t_n) \end{bmatrix}, \quad \Lambda = \begin{bmatrix} G(t_1) & \phi(t_1,t_0) \\ G(t_2) & \phi(t_2,t_0) \\ & \cdot \\ & \cdot \\ & \cdot \\ G(t_n) & \phi(t_n,t_0) \end{bmatrix}, \quad \delta = \begin{bmatrix} \delta(t_1) \\ \delta(t_2) \\ \cdot \\ \cdot \\ \cdot \\ \delta(t_n) \end{bmatrix} \tag{12}$$

The sum of the squares of the residuals between the measured data $Y_M(t_i)$ and $Y(t_i)$ calculated from equation (2) is

$$s = \delta^T \delta = \left[y_M - \Lambda\, x(t_0)\right]^T \left[y_M - \Lambda\, x(t_0)\right] \tag{13}$$

Minimizing s with respect to x_0 we obtain for x_0

$$\hat{x}_0 = (\Lambda^T \Lambda)^{-1}\, \Lambda\, y_M \tag{14}$$

which is the least-squares estimate for x_0. Adding $\hat{x}_0$ to $X_{REF}(t_0)$, we obtain $\hat{X}(t_0)$ the initial conditions for the nonlinear state variables sought. Recognize that for the solution to be valid, equations (3) and (4) must satisfy the linearity assumption. This requires that x and y be small.

Because some measurements are more accurate than others, one might weight the residuals δ by the inverse of their standard deviation.

Equation (13) therefore becomes

$$s = \delta^T\, \Sigma^{-1}\, \delta \tag{15}$$

where

$$\Sigma = \begin{bmatrix} \sigma^2(t_1) & & & & 0 \\ & \sigma^2(t_2) & & & \\ & & \cdot & & \\ & & & \cdot & \\ & & & & \cdot \\ 0 & & & & \sigma^2(t_n) \end{bmatrix} \text{ with } \sigma^2(t_i) = \begin{bmatrix} \sigma_1^2(t_i) & & & & 0 \\ & \sigma_2^2(t_i) & & & \\ & & \cdot & & \\ & & & \cdot & \\ & & & & \cdot \\ 0 & & & & \sigma_p^2(t_i) \end{bmatrix} \tag{16}$$

The weighted least-squares estimate can be written as

$$\hat{x}_0 = \left(\Lambda^T \Sigma^{-1} \Lambda\right)^{-1} \Lambda^T \Sigma^{-1} y_M \tag{17}$$

Weighting the data by their complete covariance matrix,

$$\sigma^2 = \begin{bmatrix} \sigma_1^2(t_1) & \sigma_{12}(t_1) & \cdots & \sigma_{1p}(t_1) \\ \sigma_{21}(t_1) & \sigma_2^2(t_1) & \cdots & \sigma_{2p}\ t_1) \\ \vdots & & & \\ \sigma_{p1}(t_1) & \sigma_{p2}(t_1) & \cdots & \sigma_p^2(t_1) \end{bmatrix} \tag{18}$$

one obtains a minimum variance estimate.

Equation (17) yields $\hat{x}_0$ as a linear function of y_M, which, in turn, is a function of the assumed random noise in the data δ from equation (11). Therefore, x_0 is a random vector. Assuming that δ is a jointly normally distributed white random noise vector with zero mean, then y_M and likewise $\hat{x}_0$ are normally distributed. The mean and covariance of δ are

$$\begin{aligned} \varepsilon(\delta) &= 0 \\ \operatorname{cov}(\delta) &= \Sigma \end{aligned} \tag{19}$$

The mean and covariance of y_M are

$$\begin{aligned} \varepsilon(y_M) &= \Lambda\ \hat{x}_0 \\ \operatorname{cov}(y_M) &= \varepsilon\left\{\left[y_M - \varepsilon(y_M)\right]\left[y_M - \varepsilon(y_M)\right]^T\right\} = \Sigma \end{aligned} \tag{20}$$

The mean and covariance of $\hat{x}_0$ are

$$\varepsilon(\hat{x}_0) = (\Lambda^T \Sigma^{-1} \Lambda)^{-1} \Lambda^T \Sigma^{-1} \varepsilon(y_M) = x_0$$
$$\mathrm{cov}(\hat{x}_0) = (\Lambda^T \Sigma^{-1} \Lambda)^{-1} = P \tag{21}$$

The mean of the best estimate of $\hat{x}_0$ is equal to x_0, thus $\hat{x}_0$ is an unbiased estimate. The statistics of a normally distributed random vector are completely determined from the mean and covariance. Therefore, equations (17) and (21) completely describe the random vector x_0 in terms of its mean, $\hat{x}_0$, and covariance, P.

C. Recursive Processing Algorithms

The estimator equation, equation (17), exhibits the computational difficulty of requiring large matrices to be calculated and stored in the computer. Furthermore, having determined $\hat{x}_0$ for n data points $Y_M(t_i)$, $i = 1, 2, \ldots n$, if an addition point $Y_M(t_{n+1})$ becomes available, the entire process must be repeated using $n + 1$ points. It would be convenient if, after initially determining $\hat{x}_0$ using n points, we could improve this estimate using only information contained in the $(n + 1)^{th}$ data point. Such a recursive algorithm will be developed next (refs. 8 and 10 thru 15). The best estimate $\hat{x}_0$, corresponding to processing n data points, from equation (17) is

$$\hat{x}_{0n} = P_n \Lambda^T \Sigma^{-1} y_M \text{ where } P_n = (\Lambda^T \Sigma^{-1} \Lambda)^{-1} \tag{22}$$

Similarly, the best estimate $\hat{x}_0$ corresponding to processing $n + 1$ data points is

$$\hat{x}_{0n+1} = P_{n+1} \Lambda^{*T} \Sigma^{*-1} y_M^* \text{ where } P_{n+1} = (\Lambda^{*T} \Sigma^{*-1} \Lambda^*)^{-1} \tag{23}$$

From their definition, Λ, Σ, and y_M are related to Λ^*, Σ^*, and y_M^* as follows:

$$\Lambda^* = \left[\begin{array}{c} \Lambda \\ \hline G(t_{n+1})\ \phi(t_{n+1}, t_0) \end{array}\right], \quad \Sigma^* = \left[\begin{array}{c|c} \Sigma & 0 \\ \hline 0 & \sigma^2(t_{n+1}) \end{array}\right], \quad y_M^* = \left[\begin{array}{c} y_M \\ \hline y_M(t_{n+1}) \end{array}\right] \tag{24}$$

Equation (23) can therefore be written

$$\hat{x}_{0_{n+1}} = \left(\left[\Lambda^T \,\vdots\, \phi^T\ G^T\right] \Sigma^{*-1} \left[\begin{array}{c} \Lambda \\ \hline G\phi \end{array}\right] \right)^{-1} \left[\Lambda^T \,\vdots\, \phi^T\ G^T\right] \Sigma^{*-1} \left[\begin{array}{c} y_M \\ \hline y_M(t_{n+1}) \end{array}\right] \tag{25}$$

which can be manipulated into the following.

$$\hat{x}_{0_{n+1}} = \hat{x}_{0_n} - K\left[G\phi\ \hat{x}_{0_n} - y_M(t_{n+1})\right] \tag{26}$$

$$K = P_n\ \phi^T\ G^T \left[\sigma^2(t_{n+1}) + G\phi\ P_n\ \phi^T\ G^T\right]^{-1} \tag{27}$$

$$P_{n+1} = P_n - K\ G\phi\ P_n \tag{28}$$

where

$$G = G(t_{n+1}) \text{ and } \phi = \phi(t_{n+1}, t_0) \tag{29}$$

Equations (26) thru (28) are the recursive equations sought. Given the best estimate and covariance at time t_0 corresponding to n data points, $\hat{x}_{0_n}$ and P_n, respectively, corrections can be made by means of equation (26) thru (28) that yield the best estimate and covariance corresponding to $n + 1$ data points. The recursive correction can be least squares, weighted least squares, or minimum variance depending on whether $\sigma^2(t_{n+1})$ is an identity matrix, diagonal matrix of variances or complete covariance of the $(n+1)^{th}$ data vector. Note that if instead of estimating $\hat{x}$ at t_0, we had used an arbitrary time, say t_j, we would have obtained

$$\hat{x}(t_j|t_{n+1}) = \hat{x}(t_j|t_n) - K\left[G\phi\ \hat{x}(t_j|t_n) - y_M(t_{n+1})\right] \tag{30}$$

$$K = P_n\ \phi^T G^T \left[\sigma^2(t_{n+1}) + G\phi\ P_n\ \phi^T G^T\right]^{-1} \tag{31}$$

$$P_{n+1} = P_n - K\ G\ \phi\ P_n \tag{32}$$

where

$$G = G(t_{n+1}) \quad \text{and} \quad \phi = \phi(t_{n+1}, t_j) \tag{33}$$

The notation $\hat{x}(t_j | t_{n+1})$ denotes the best estimate at t_j based on processing data through t_{n+1}. Equations (30) thru (33) can be used for smoothing, filtering, or predicting depending on t_j as follows

$$\left.\begin{array}{ll} t_j < t_{n+1} & \text{smoothing} \\ t_j = t_{n+1} & \text{filtering} \\ t_j > t_{n+1} & \text{predicting} \end{array}\right\} \tag{34}$$

STEP uses filtering equations that can be obtained from equations (30) thru (33) by letting $t_j = t_{n+1}$.

$$\hat{x}(t_{n+1} | t_{n+1}) = \hat{x}(t_{n+1} | t_n) - K\left[G\hat{x}(t_{n+1} | t_n) - y_M(t_{n+1})\right] \tag{35}$$

$$K = P_n(t_{n+1})\, G^T \left[\sigma^2(t_{n+1}) + G\, P_n(t_{n+1})\, G^T\right]^{-1} \tag{36}$$

$$P_{n+1}(t_{n+1}) = P_n(t_{n+1}) - K\, G\, P_n(t_{n+1}) \tag{37}$$

where

$$G = G\left(t_{n+1}\right) \tag{38}$$

The matrix $P_n(t_{n+1})$ is the covariance matrix of state errors at time t_{n+1} based on processing data up through t_n. From the definition of P_n in equation (22), we see that $P = \left(\Lambda^T \Sigma^{-1} \Lambda\right)^{-1}$. Using the definition of Λ in equation (12), with $t_o = t_n$ and t_{n+1}, we obtain the following equation for propagating P between data points:

$$P_n(t_{n+1}) = \phi(t_{n+1}, t_n)\, P_n(t_n)\, \phi^T(t_{n+1}, t_n) \tag{39}$$

From equation (7d), we see that the state perturbations can be propagated between data points as follows:

$$x(t_{n+1}|t_n) = \phi(t_{n+1},t_n)\, x(t_n|t_n) \tag{40}$$

Equations (35) thru (38) are used at measurement data times t_i, $i = 1, 2, \ldots, n$ to produce a discontinuous change in $\hat{x}$ and P, which reflect the information obtained from the $(n+1)^{th}$ measurement $Y_M(t_{n+1})$. Between measurements, equations (39) and (40) are used to propagate $\hat{x}$ and P.

D. Uncertain Model Parameters

Frequently when fitting solutions of the equations of motion to sensor data, parameters other than the state variables are either unknown or known with limited certainty. Examples of such parameters that are involved in the equations of motion, equation (1), are the gravitational harmonic coefficients, the aerodynamic lift and drag coefficients, and, conceivably, the atmospheric density. The modeled measurement equations, equation (2), similarly can involve such parameters, e.g., tracking station locations. Within the context of the filter theory discussed thus far, such variables must be governed by differential equations if they are to be estimated. For cases where the governing differential equation is known, it is merely appended to the dynamical system equations, equation (1), and the parameter becomes a state variable. More frequently, however, the governing differential equation cannot be defined, and special treatment must be resorted to. One common way of handling such parameters is to consider them constant, thus their governing equation can be written $\dot{X}_i = 0$. We then speak of an expanded state vector that includes the original state variables plus the constant model parameters to be estimated. Occasionally, an estimate of the model parameters is not sought, but it is desired to reflect the parameters uncertainty in the covariance matrix of state errors.

We will next expand the filtering equations to include uncertain model parameters in both the state equations and measurement equations (Refs. 15 and 16). Some parameters will be estimated, others will not. Consider the following dynamical system composed of first-order, nonlinear differential equations that describe the state of a vehicle:

$$\dot{X}(t) = f[X(t), W, U, t] \tag{41}$$

where X is an m-vector of state variables (e.g., position, velocity, and attitude); W is an ℓ-vector of model parameters (in either the equations of motion or measurement equations) that are to be estimated along with the state; and U is a q-vector of uncertain model parameters in the equations of motion that are not to be estimated, but nevertheless their uncertainty shall degrade the confidence of the state estimate. The mean value of U is specified a priori to be U_0 and its covariance matrix is D. Consider W and U to be constant vectors, equation (41) can be rewritten as follows:

$$\dot{X}'(t) = f[X'(t),t] \tag{42}$$

where

$$X' = \begin{bmatrix} X \\ W \\ U \end{bmatrix} \tag{43}$$

The first m equations in equation (42) are identical to equation (41). The last $\ell + q$ equations merely state the $\dot{W} = 0$ and $\dot{U} = 0$, i.e., the components of W and U are constant with time.

The variables being measured at time t_i are related to the state as follows:

$$Y(t_i) = g\left[X'(t_i),\ V,\ t_i\right] \tag{44}$$

where Y is a p-vector of measurement variables, and V is an r-vector of uncertain measurement parameters that are not to be estimated but whose uncertainty shall degrade the confidence of the state estimate. The mean value of V is V_0 and its covariance matrix is S.

Again, expanding the state vector to include V, we have

$$\dot{X}''(t) = f[X''(t),t] \tag{45}$$

where

$$X'' = \begin{bmatrix} X \\ W \\ U \\ V \end{bmatrix} \tag{46}$$

and

$$Y(t_i) = g\left[X''(t_i), t_i\right] \tag{47}$$

The first m equations in equation (45) are identical to equation (41), and the last $\ell + q + r$ equations state the $\dot{W} = 0$, $\dot{U} = 0$, and $\dot{V} = 0$.

The minimum variance filtering equations corresponding to equations (45) and (47) are identical to equations (35) thru (40), with $\hat{x}$ and P replaced by x'' and P''. However, we did not desire to estimate vectors U and V. Thus, we will partition $\hat{x}''$ and P'' into the parts being estimated and those not being estimated. Defining Z to be the expanded vector being estimated, then

$$Z = \begin{bmatrix} X \\ W \end{bmatrix} \tag{48}$$

Perturbations in U and V about their mean values, and Z about its reference solution are

$$\begin{aligned} u &= U - U_0 \\ v &= V - V_0 \\ z &= Z - Z_{REF} \end{aligned} \tag{49}$$

The covariance matrix P'' is partitioned into a $m + \ell$ submatrix P corresponding to Z and the $q \times q$ and $r \times r$ submatrices D and S corresponding to U and V, respectively.

$$P'' = \left[\begin{array}{c|c|c} P & C_{uz} & C_{vz} \\ \hline C_{uz}^T & D & 0 \\ \hline C_{vz}^T & 0 & S \end{array}\right] \begin{array}{l} \left.\vphantom{\begin{array}{c}P\\ \hline C_{uz}^T\end{array}}\right\} m + \ell \\ \left.\vphantom{\begin{array}{c}C_{uz}^T\\ \hline C_{vz}^T\end{array}}\right\} q \\ \left.\vphantom{\begin{array}{c}C_{vz}^T\end{array}}\right\} r \end{array} \tag{50}$$

The matrices C_{uz} and C_{vz} contain correlation terms between u and z, and v and z, respectively. The vectors u and v are assumed to be independent so that their correlation is zero. The G'' matrix is partitioned into the $m + \ell + s$ submatrix G corresponding to Z, and the $r \times r$ submatrix H corresponding to V

$$G'' = [\underbrace{G}_{m+\ell} \mid \underbrace{0}_{q} \mid \underbrace{H}_{r}] \tag{51a}$$

where

$$G = \left(\frac{\partial g}{\partial Z}\right) \quad \text{and} \quad H = \left(\frac{\partial g}{\partial V}\right) \tag{51b}$$

The state transition matrix ϕ'' is partitioned into the $(m \times \ell) \times (m + \ell)$ submatrix corresponding to $\left[\partial z\left(t_{n+1}\right) / \partial z\left(t_n\right)\right]$, the $(m + \ell) \times q$ submatrix θ corresponding to $\left[\partial z\left(t_{n+1}\right) / \partial u\left(t_n\right)\right]$, and identity and null submatrixes as follows:

$$\phi'' = \begin{array}{c} \left[\begin{array}{c|c|c} \phi & \theta & 0 \\ \hline 0 & I & 0 \\ \hline 0 & 0 & I \end{array}\right] \end{array} \begin{array}{l} \left.\vphantom{\begin{array}{c}\phi\\0\\0\end{array}}\right\} m + \ell \\ \left.\vphantom{\begin{array}{c}\phi\\0\\0\end{array}}\right\} q \\ \left.\vphantom{\begin{array}{c}\phi\\0\\0\end{array}}\right\} r \end{array} \tag{52}$$

Because u and v are not being estimated, their covariances D and S in equation (50) will remain constant throughout the minimum variance processing. Had U and V been permitted to be estimated, they would have been included in Z and their covariance would been updated.

Substituting equations (48) thru (52) into equations (35) thru (37) yields the following recursive minimum variance filtering equations for an expanded state with uncertain parameters contained in the equations of motion and measurement equations:

$$\hat{z}(t_{n+1} | t_n) = \hat{z}(t_{n+1} | t_n) - K\left[G\hat{z}(t_{n+1} | t_n) - y_M(t_{n+1})\right] \tag{53a}$$

$$P_{n+1}(t_{n+1}) = P_n(t_{n+1}) - K\left[P_n(t_{n+1})\, G^T + C_{vz_n}(t_{n+1})\, H^T\right]^T \tag{53b}$$

$$C_{uz_{n+1}}(t_{n+1}) = C_{uz_n}(t_{n+1}) - K\left[G\, C_{uz_n}(t_{n+1})\right] \tag{53c}$$

$$C_{vz_{n+1}}(t_{n+1}) = C_{vz_n}(t_{n+1}) - K\left[G\, C_{vz_n}(t_{n+1}) + H\, S\right] \tag{53d}$$

$$K = \left[P_n(t_{n+1})\, G^T + C_{vz}(t_{n+1})\, H^T\right] J^{-1} \tag{53e}$$

$$J = G\, P_n(t_{n+1})\, G^T + G\, C_{vz_n}(t_{n+1})\, H^T + H\, C^T_{vz_n}(t_{n+1})\, G^T + HSH^T + \sigma^2(t_{n+1}) \tag{53f}$$

The estimate, covariance, and correlation matrices are propagated between measurement points by means of the following equation obtained from equations (39) and (40):

$$\hat{z}(t_{n+1}|t_n) = \phi\, \hat{z}(t_n|t_n) \tag{54a}$$

$$P_n(t_{n+1}) = \phi\, P_n(t_n)\, \phi^T + \phi\, C_{uz_n}(t_n)\, \theta^T + \theta\, C_{uz_n}^T(t_n)\, \phi^T + \theta D \theta^T \tag{54b}$$

$$C_{uz_n}(t_{n+1}) = \phi\, C_{uz_n}(t_n) + \theta\, D \tag{54c}$$

$$C_{vz_n}(t_{n+1}) = \phi\, C_{vz_n}\, t_n \tag{54d}$$

where

$$\phi = \phi(t_{n+1}, t_n), \quad G = G(t_{n+1}), \quad H = H(t_{n+1}), \quad \text{and} \quad \theta = \theta(t_{n+1}) \tag{54e}$$

E. Computational Procedures

Because of the complexity of the recursive filtering equations, we will next outline the sequential operations performed when applying these equations to a problem. The flow logic diagram (fig. 1) will aid in the discussion. Sequential operations are:

1) Estimate the values of the initial expanded state vector $\hat{Z}(t_0)$ and its covariance $P_0(t_0)$, the model parameters U_0 and V_0 and their respective covariances D and S, and the correlation matrices $C_{uz_0}(t_0)$, and $C_{vz_0}(t_0)$. $\hat{Z}(t_0)$ will be used as the reference solution $Z_{REF}(t_0)$.

2) Set the measurement data point counter, $i = 1$.

3) Obtain the first measurement data point of the chronologically ordered data. The magnitude, Y_{M_i}, time, t_i, and covariance, $\sigma^2(t_i)$, are required.

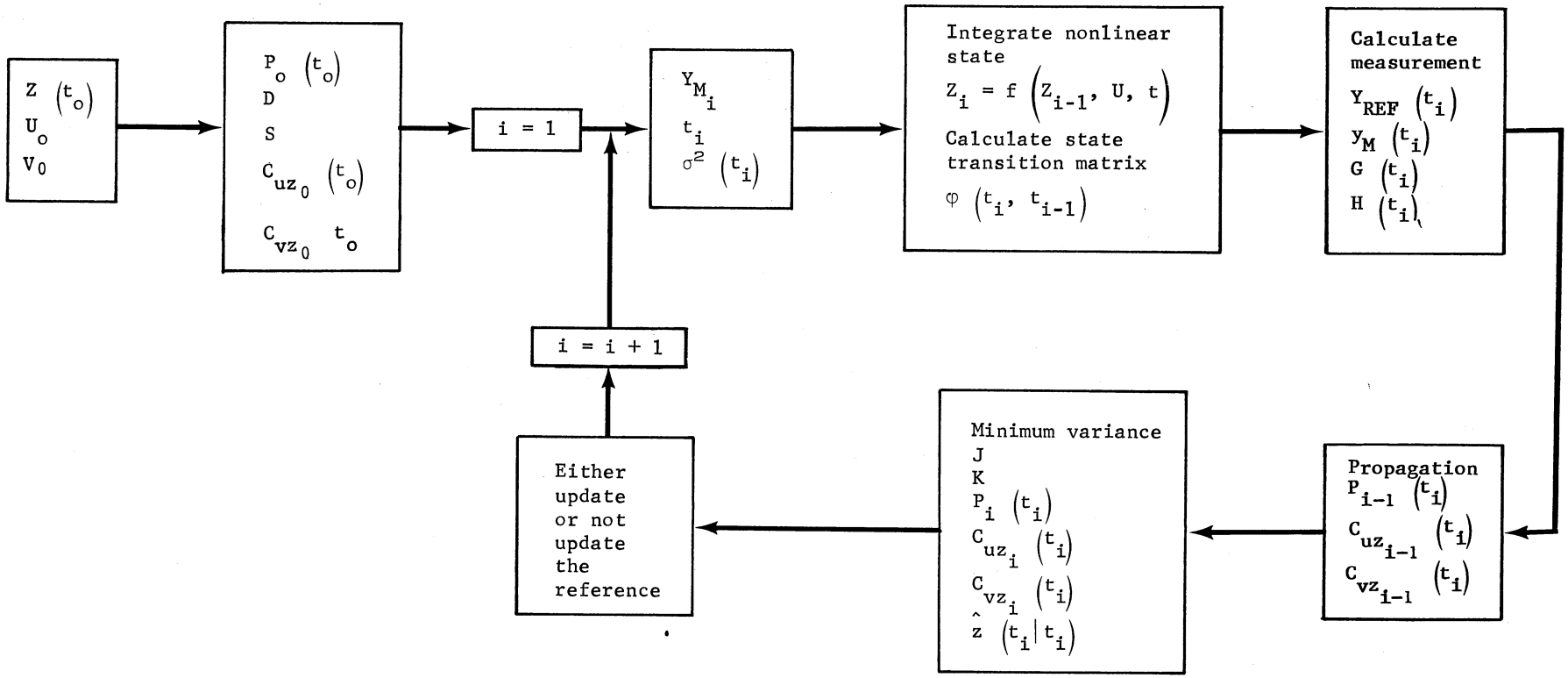

Figure 1.- Schematic of Recursive Filtering Logic

4) Integrate the nonlinear state equation, equations (41) from initial conditions $Z_{REF}(t_{i-1})$ to t_i. This solution will be used as the reference. Calculate the state transition matrix $\phi(t_{i-1},t_i)$ and parameter transition matrix $\theta(t_i)$ corresponding to the reference solution (see Section III.F for methods of determining these matrices).

5) Calculate the reference value of the nonlinear measments, $Y_{REF}(t_i)$, from equation (44). Also calculate G and H matrices in equation (51b) at time t_i.

6) Calculate $y_M(t_i)$, the difference between the actual measurement, Y_{M_i}, and corresponding reference measurements, $Y_{REF}(t_i)$.

7) Propagate the expanded state perturbations, the covariance and correlation matrices from t_{i-1} to t_1 by means of equation (54). Note that when beginning the process, $\hat{z}(t_0|t_0) = 0$.

8) Perform the minimum variance update at t_i by using equation (53) in the following order:

   Calculate J;

   Calculate K;

   Calculate $P_i(t_i)$, $C_{uz_i}(t_i)$, $C_{vz_i}(t_i)$;

   Calculate $\hat{z}(t_i|t_i)$.

9) The linear filter theory can now be used in either of two ways -- either update the reference or do not update the reference trajectory. When a good initial estimate of the expanded state is unavailable and/or the measurement data signal-to-noise ratio is large, advantages can be gained by updating the reference; when the signal-to-noise ratio is small and a good reference is available, it is better not to update the reference:

Updated reference - Add the estimate of the expanded state perturbations $\hat{z}(t_i|t_i)$ to the nonlinear state as follows

$$\hat{Z}(t_i) = Z_{REF}(t_i) + \hat{z}(t_i|t_i) \tag{57}$$

then redefine $\hat{Z}(t_i)$ to be the reference for future processing. Because the correction $\hat{z}(t_i|t_i)$ has been accounted for in the updated reference, set $\hat{z}(t_i|t_i)$ to zero for future use. Go to item 10).

Nonupdated reference - Do not reflect the estimate of the perturbations $\hat{z}(t_i|t_i)$ into the reference state $Z_{REF}(t_i)$ until all data have been processed. Thus, $Z_{REF}(t_i)$ is nonoptimum as the process proceeds. The corrections $\hat{z}(t_i|t_i)$ are accumulated as shown in equation (53a). Go to item 10).

10) Update the measurement data counter, $i = i + 1$ and return to item 3).

At the completion of the filtering, when either all data have been processed or a final time has been met, the reference trajectory is updated if it has not already been (i.e., updated reference mode). This expanded state vector $\hat{Z}(t_f|t_n)$ represents the best estimate at final time based on processing all data. It must therefore be smoothed back to the initial time to obtain the best estimate of the state vector at all times (between t_0 and t_f) based on processing all data. The covariance matrix must also be propagated back to t_0 to give the uncertainty at any time based on processing all data. The smoothing of the expanded state vector is accomplished by integrating equation (41) backward in time from t_f to t_0. The covariance and correlation matrices are propagated backward in time via equations (54). The resulting initial state vector can be used for a second iteration if necessary or desired. The smoothed covariance matrix should not be used on the second iteration, however, since it does not reflect the true certainty of the first iteration, because of possible linearity violations, and will be optimistic (too small). Good

criteria are not currently available for selecting initial covariance and correlation matrices for the second iteration; therefore, good judgment must be used.

F. Transition Matrices

In equation (52), the state transition matrix, ϕ, is an $(m + \ell) \times (m + \ell)$ matrix, which relates perturbations in the expanded state variables at time t_n to perturbations at time t_{n+1}. These perturbations occur about the nominal or reference trajectory and are governed by the linearized equations of motion as seen in equation (7a). The expanded state variable perturbations correspond to both state variables and model parameters that are to be estimated. When the model parameters are constant (governed by differential equations that state that $\dot{Z}_i = 0$) the calculation of their elements in ϕ is simplified.

Referring back to equation (1), the nonlinear system of ordinary differential equations can be linearized to yield equations (3). The state transition matrix ϕ is a solution to the linearized equations as shown in equation (7a) and can be calculated by integrating equations (3) from identity initial conditions as shown in equation (7b).

Consider the system of differential equations in equation (45). Linearizing these equations and integrating from identity initial conditions yields the transition matrix in equation (52). Note that there are $m + \ell + q + r$ equations in the system. However, all but the first m equations state that the time derivative of W, U, and V equal zero. Thus the matrix ϕ'' can be partitioned into the following:

$$\phi'' = \begin{array}{c} \left[\begin{array}{c|c|c|c} \phi & & \theta & \\ \hline \# & & \# & 0 \\ \hline 0 & I & 0 & 0 \\ \hline 0 & 0 & I & 0 \\ \hline 0 & 0 & 0 & I \end{array}\right] \begin{array}{l} \left.\vphantom{\begin{array}{c}\#\\0\end{array}}\right\} m \\ \left.\vphantom{0}\right\} \ell \\ \left.\vphantom{0}\right\} q \\ \left.\vphantom{0}\right\} r \end{array} \\ \begin{array}{cccc} \underbrace{\quad}_{m} & \underbrace{\quad}_{\ell} & \underbrace{\quad}_{q} & \underbrace{\quad}_{r} \end{array} \end{array} \tag{55}$$

The upper left $(m + \ell) \times (m + \ell)$ submatrix constitutes the state transition matrix ϕ in equations (54). The upper middle $(m + \ell) \times q$ submatrix constitutes the parameter transition matrix θ in equations (54). To obtain ϕ and θ only m linear differential equations of motion need be integrated. However, $m + \ell + q$ independent vector solutions are calculated, each solution having a different component of z or u equal unity, all other components zero at the initial time of integration.

IV. NONLINEAR EQUATIONS OF MOTION

The principal difficulty in formulating a reentry filtering program arises in mathematically describing the dynamical system. As a result, two models have been formulated and each has been carried through the computer program development phases. The STEP1 model has included within it an accurate representation of the vehicle aerodynamics as well as atmospheric conditions that affect the aerodynamic forces. The STEP2 model bypasses the requirement of specifying aerodynamic and atmospheric characteristics by using the measured body translational accelerations directly in the equations of motion. Both programs use the measured inertial angular rates to replace the rotational dynamics. This alleviates the requirement of solving the full 6-D equations of motion including guidance system and autopilot. In the following subsections, the detailed equations of state in both their nonlinear and linear forms are presented for STEP1 and STEP2. The linear equations of motion are used to determine the state transition matrix.

A. Axes Systems

The axes systems used in the following development are now described with the aid of figure 2.

1. Inertial axes $\left(\text{I-frame, unit vectors } e_{XI},\ e_{YI},\ e_{ZI}\right)$.- The inertial axes is a right-hand Cartesian axes system fixed in space. Neither its orientation nor the position of the origin varies with time. In applying Newton's laws of motion, the dynamic motion is referenced to this space fixed axes. The e_{ZI} axis points through the north geographical pole; e_{XI} and e_{YI} lie in the equitorial plane.

2. Planet axes $\left(\text{P-frame, unit vectors } e_{XP},\ e_{YP},\ e_{ZP}\right)$.- This planet fixed axes constitutes a right-hand Cartesian axes system having its origin at the center of the planet. It is fixed in the planet so that the axes rotate relative to the I-frame The e_{ZP} axis points toward the north geographic pole. The e_{XP} and e_{YP} lie in the equatorial plane with e_{XP} directed toward the prime meridian (zero longitude).

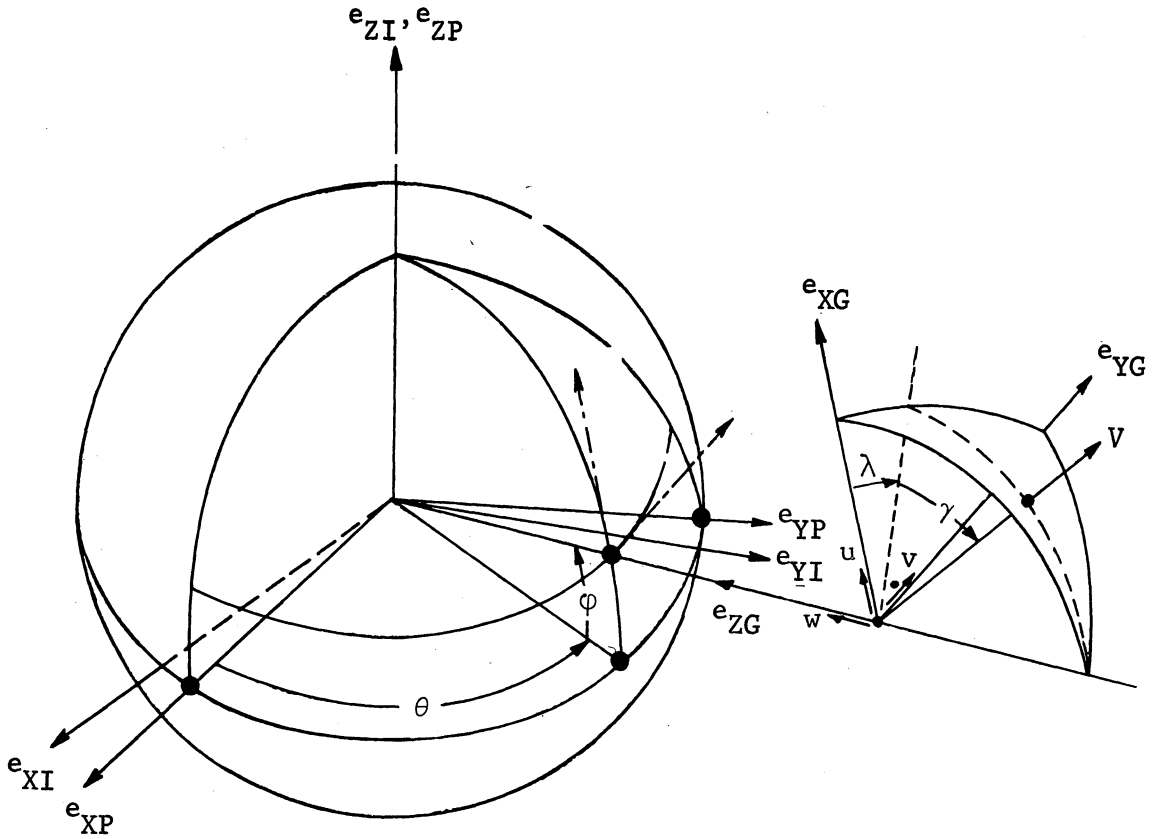

Figure 2.- Schematic of Earth Model

3. Geographic axes G-frame, unit vectors e_{XG}, e_{YG}, e_{ZG}.- The geographic axes form a right-hand Cartesian system with origin at the vehicle center of gravity, yet always retaining a fixed orientation relative to the geographic directions. The e_{ZG} axis always points in a direction toward the planet center from the vehicle center of gravity; e_{YG} points east, and e_{XG} points north.

4. Body axes (B-frame, unit vectors e_{XB}, e_{YB}, e_{ZB}).- The body axes is a right-hand Cartesian system aligned with the axes of the vehicle. The e_{XB} axis is directed forward along the vehicle's longitudinal axis; e_{YB} points right (out the right wing), and e_{ZB} points downward.

B. Translational Equations of Motion

Newton's second law written in vector form is

$$F = m\ddot{r} \tag{56}$$

where F is the total external force vector acting on the vehicle, m is the mass of the vehicle, and r is the position vector from the origin of an inertial axes system to the center of mass of the vehicle. The acceleration $\ddot{r}$ is related to the inertial axes system. The external force vector F includes all aerodynamic, propulsive, and gravitational forces acting on the body.

Expanding $\ddot{r}$ in terms of velocities and accelerations relative to the planet surface yields:

$$\ddot{r} = \underset{\substack{\text{relative}\\\text{acceleration}}}{a} + \underset{\substack{\text{coriolis}\\\text{acceleration}}}{2\left(\Omega_p \times V\right)} + \underset{\substack{\text{centrapetal}\\\text{acceleration}}}{\Omega_p \times \left(\Omega_p \times r\right)} \tag{57}$$

where a and V are the acceleration and velocity of the vehicle (treated as a mass particle) relative to the moving planet, Ω_p, is the angular rotation rate of the planet relative to inertial space, and $\ddot{r}$ is the acceleration of the mass center with respect to inertial space. From equations (56) and (57), we obtain the vector equations of motion

$$a = \frac{F}{m} - 2\left(\Omega_p \times V\right) - \Omega_p \times \left(\Omega_p \times r\right) \tag{58}$$

The velocity and acceleration can be expressed in the G-frame axes system as follows:

$$V = r\dot{\varphi}\, e_{XG} + r\dot{\theta}\cos\varphi\, e_{YG} - \dot{r}\, e_{ZG} \tag{59}$$

$$\begin{aligned} a = {} & [r\ddot{\varphi} + 2\dot{r}\dot{\varphi} + r\dot{\theta}^2 \sin\varphi\cos\varphi]\, e_{XG} \\ & + [(r\ddot{\theta} + 2\dot{r}\dot{\theta})\cos\varphi - 2r\dot{\varphi}\dot{\theta}\sin\varphi]\, e_{YG} \\ & - [\ddot{r} - r\dot{\varphi}^2 - r\cos^2\varphi\,\dot{\theta}^2]\, e_{ZG} \end{aligned} \tag{60}$$

Substituting equations (59) and (60) into (58) yields the following three scalar equations along the G-frame axes coordinate directions

$$r\ddot{\varphi} = \frac{F_{XG}}{m} - 2\dot{r}\dot{\varphi} - r \sin \varphi \cos \varphi \left(\dot{\theta}^2 + 2\dot{\theta}\Omega_P + \Omega_P{}^2\right)$$

$$r\ddot{\theta} \cos \varphi = \frac{F_{YG}}{m} - 2(\dot{r} \cos \varphi - r \sin \varphi\dot{\varphi})\left(\dot{\theta} + \Omega_P\right)$$

$$\ddot{r} = - \frac{F_{ZG}}{m} + r\dot{\varphi}^2 + r \cos^2 \varphi\left(\dot{\theta}^2 + 2\Omega_P\dot{\theta} + \Omega_P{}^2\right) \tag{61}$$

Defining u, v, and w as the components, the inertial velocity along the e_{XG}, e_{YG}, e_{ZG} directions, respectively.

$$u = r\varphi$$

$$v = r\left(\dot{\theta} + \Omega_P\right) \cos \varphi$$

$$w = - \dot{r} \tag{62}$$

Equations (61) can now be written in matrix form as

$$\begin{bmatrix} \dot{u} \\ \dot{v} \\ \dot{w} \end{bmatrix} = \frac{1}{m} \begin{bmatrix} F_{XG} \\ F_{YG} \\ F_{ZG} \end{bmatrix} + \frac{1}{r} \begin{bmatrix} uw - v^2 \tan \varphi \\ uv \tan \varphi + vw \\ -(u^2 + v^2) \end{bmatrix} \tag{63}$$

Equations (63) are the dynamic equations of translational motion that yield the inertial velocity vector time history. The external accelerations, F_{XG}/m, F_{YG}/m, and F_{ZG}/m, must be de- described in terms of their gravitational, aerodynamic and propulsive components.

The kinematic equations that yield the position of the vehicle can be obtained from equations (62) as follows:

$$\dot{h} = \dot{r} = -w$$

$$\dot{\varphi} = u/r$$

$$\dot{\theta} = v/(r \cos \varphi) - \Omega_p \tag{64}$$

The variables u, v, w, h, φ, and θ define the translational velocity and position of the vehicle and constitute six of the state variables in the STEP models.

C. Rotational Equations of Motion

Normally six equations are required to characterize the rotational motion of a vehicle -- three kinematic equations that yield the angular orientation and three dynamic equations that yield the angular velocity. Like the dynamic equations of translation that balance the external forces, equations (63), the dynamic equations of rotation balance and external torques. The external torques on an entry vehicle arise from the primary propulsion system, attitude control jets, aerodynamic control devices, as well as internal rotating equipment. Precise modeling of these torques for unsymmetrical, guided vehicles is very complex, especially in a filtering application where a state transition matrix is required. Therefore, STEP omits the dynamic equations of rotation and instead uses the inertial angular rate measurements P, Q, and R from airborne gyros.

The kinematic equations of rotation are formulated using a four-parameter system of quaternions (refs. 18 thru 20). This formulation eliminates the singularities associated with Euler angles, yet does not require the additional computation associated with the nine direction cosines. Because quaternions have not been in common use, a detailed development is presented herein.

The quaternion is a four-parameter quantity commonly written

$$q = e_0 + e_1 i + e_2 j + e_3 k \tag{65}$$

where e_0, e_1, e_2, and e_3 are real numbers, and i, j, and k obey the following rules:

$$i^2 = j^2 = k^2 = -1$$

$$ij = -ji = k \qquad jk = -kj = i \qquad ki = -ik = j \tag{66}$$

The conjugate of the quaternion q, denoted q^* is

$$q^* = e_0 - e_1 i - e_2 j - e_3 k \tag{67}$$

The quantity e_0 is called the real or scalar part of the quaternion; $e_1 i + e_2 j + e_3 k$ is called the imaginary or vector part. The length or norm of a quaternion is defined to be

$$\|q\| = \sqrt{qq^*} = \sqrt{e_0^2 + e_1^2 + e_2^2 + e_3^2} \tag{68}$$

If the quaternion q has a norm of unity, $\|q\| = 1$, it is called a versor.

Let V be a vector having components u, v, w. It can be written

$$V = ui + vj + wk \tag{69}$$

Forming the product $V' = q^* V q$, where q is a versor yields

$$\begin{aligned} V' &= (e_0 - e_1 i - e_2 j - e_3 k)(ui + vj + wk)(e_0 + e_1 i + e_2 j + e_3 k) \\ &= [(e_0^2 + e_1^2 - e_2^2 - e_3^2)\, u + 2(e_1 e_2 + e_0 e_3)\, v + 2(e_1 e_3 - e_0 e_2) w]i \\ &\quad + [2(e_1 e_2 - e_0 e_3)\, u + (e_0^2 - e_1^2 + e_2^2 - e_3^2)\, v + 2\,(e_0 e_1 + e_2 e_3) w]j \\ &\quad + [2(e_1 e_3 + e_0 e_2)\, u + 2\,(e_2 e_3 - e_0 e_1)\, v + (e_0^2 - e_1^2 - e_2^2 + e_3^2) w]k \end{aligned} \tag{70}$$

This is simply the vector transformation

$$V' = GV \text{ with } G = \begin{bmatrix} (e_0^2 + e_1^2 - e_2^2 - e_3^2) & 2(e_1 e_2 + e_0 e_3) & 2(e_1 e_3 - e_0 e_2) \\ 2(e_1 e_2 - e_0 e_3) & (e_0^2 - e_1^2 + e_2^2 - e_3^2) & 2(e_0 e_1 + e_2 e_3) \\ 2(e_1 e_3 + e_0 e_2) & 2(e_2 e_3 - e_0 e_1) & (e_0^2 - e_1^2 - e_2^2 + e_3^2) \end{bmatrix} \tag{71}$$

The quaternion may also be viewed in terms of an axis rotation about a line. It can be shown that the orientation of one axis system with respect to another axis system is uniquely determined by a single rotation about a specific direction. The direction vector S can be specified by the three angles ζ, η, ξ, which it makes with the axes of the reference frame, shown in figure 3. Thus, we have four parameters that establish the orientation ζ, η, ξ, and μ.

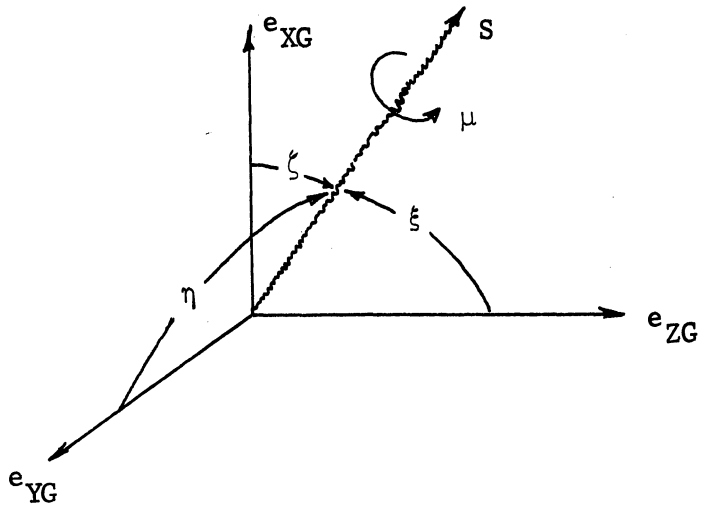

Figure 3.- Axes Orientation

Instead of the commonly used sequence of Euler angles for moving the reference axis (G-frame) to the body axis (B-frame), the procedure employing quaternion parameters can be visualized as follows:

1) Rotate the G-frame, using an orthogonal matrix B of direction cosines, to cause the e_x axis to be aligned with the direction S;

2) Rotate around S through the angle μ;

3) Rotate through an inverse matrix B^{-1} until the axes are aligned with the B-frame.

The direction S and the value of μ must be selected to cause the alignment.

Let e_{XG}, e_{YG}, and e_{ZG} be unit vectors in the G-frame. Let e_X, e_Y, e_Z be unit vectors in an axes system having e_X aligned with S, e_Y lies in the e_{XG} - e_{YG} plane and e_Z forms a right-hand system. Because e_X makes angles ζ, η, and ξ with e_{XG}, e_{YG}, and e_{ZG}, the transformation which rotates e_{XG}, e_{YG}, and e_{ZG} into e_X, e_Y, e_Z is

$$\begin{bmatrix} e_X \\ e_Y \\ e_Z \end{bmatrix} = B \begin{bmatrix} e_{XG} \\ e_{YG} \\ e_{ZG} \end{bmatrix} \tag{72}$$

where

$$b_{11} = \cos \zeta \qquad b_{12} = \cos \eta \qquad b_{13} = \cos \xi \tag{73a}$$

are the elements of the matrix B.

The remaining elements of B can be determined because it is required that e_{ZG} be perpendicular to e_Y, and the matrix B be orthogonal and reduce to the identity matrix when $\zeta = 0$, $\eta = \xi = \pi/2$. Thus,

$$\begin{aligned} b_{21} &= -\frac{\cos \eta}{\sin \xi} \qquad b_{22} = \frac{\cos \zeta}{\sin \xi} \qquad b_{23} = 0 \\ b_{31} &= -\frac{\cos \zeta}{\sin \xi} \qquad b_{32} = -\frac{\cos \eta}{\tan \xi} \qquad b_{33} = \sin \xi \end{aligned} \tag{73b}$$

The second rotation through μ about e_X can be represented by the matrix

$$\begin{bmatrix} e_X' \\ e_Y' \\ e_Z' \end{bmatrix} = M \begin{bmatrix} e_X \\ e_Y \\ e_Z \end{bmatrix} \quad \text{where } M = \begin{bmatrix} 1 & 0 & 0 \\ 0 & \cos \mu & \sin \mu \\ 0 & -\sin \mu & \cos \mu \end{bmatrix} \tag{74}$$

The final rotation from the e_X', e_Y', and e_Z' axes to the B-frame is

$$\begin{bmatrix} e_{XB} \\ e_{YB} \\ e_{ZB} \end{bmatrix} = B^{-1} \begin{bmatrix} e_X' \\ e_Y' \\ e_Z' \end{bmatrix} \tag{75}$$

The transformation from the G-frame to the B-frame is the product of the three transformations above or

$$\begin{bmatrix} e_{XB} \\ e_{YB} \\ e_{ZB} \end{bmatrix} = G \begin{bmatrix} e_{XG} \\ e_{YG} \\ e_{ZG} \end{bmatrix} \text{ with } G = B^{-1}MB \tag{76}$$

where G has the elements

$$\begin{aligned}
g_{11} &= 1 - 2 \sin^2 \frac{\mu}{2} \sin^2 \zeta \\
g_{12} &= 2\left(\sin^2 \frac{\mu}{2} \cos \zeta \cos \eta + \sin \frac{\mu}{2} \cos \frac{\mu}{2} \cos \xi\right) \\
g_{13} &= 2\left(\sin^2 \frac{\mu}{2} \cos \zeta \cos \xi - \sin \frac{\mu}{2} \cos \frac{\mu}{2} \cos \eta\right) \\
g_{21} &= 2\left(\sin^2 \frac{\mu}{2} \cos \zeta \cos \eta - \sin \frac{\mu}{2} \cos \frac{\mu}{2} \cos \xi\right) \\
g_{22} &= 1 - 2 \sin^2 \frac{\mu}{2} \sin^2 \eta \\
g_{23} &= 2\left(\sin^2 \frac{\mu}{2} \cos \eta \cos \xi + \sin \frac{\mu}{2} \cos \frac{\mu}{2} \cos \zeta\right) \\
g_{31} &= 2\left(\sin^2 \frac{\mu}{2} \cos \zeta \cos \xi + \sin \frac{\mu}{2} \cos \frac{\mu}{2} \cos \eta\right) \\
g_{32} &= 2\left(\sin^2 \frac{\mu}{2} \cos \eta \cos \xi - \sin \frac{\mu}{2} \cos \frac{\mu}{2} \cos \zeta\right) \\
g_{33} &= 1 - 2 \sin^2 \frac{\mu}{2} \sin^2 \xi
\end{aligned} \tag{77}$$

To simplify equations (76) and (77), we make the following substitutions

$$e_0 = \cos \frac{\mu}{2},\ e_1 = \cos \zeta \sin \frac{\mu}{2},\ e_2 = \cos \eta \sin \frac{\mu}{2},\ e_3 = \cos \xi \sin \frac{\mu}{2} \tag{78}$$

Thus, the G-matrix becomes

$$G = \begin{bmatrix} (e_0^2 + e_1^2 - e_2^2 - e_3^2) & 2(e_1e_2 + e_0e_3) & 2(e_1e_3 - e_0e_2) \\ 2(e_1e_2 - e_0e_3) & (e_0^2 - e_1^2 + e_2^2 - e_3^2) & 2(e_0e_1 + e_2e_3) \\ 2(e_1e_3 + e_0e_2) & 2(e_2e_3 - e_0e_1) & (e_0^2 - e_1^2 - e_2^2 + e_3^2) \end{bmatrix} \tag{79}$$

which is identical to the transformation matrix in equation (71). The four quantities e_0, e_1, e_2, and e_3 are called Euler parameters, and, from their definition, equation (78), they must satisfy the normality property

$$e_0^2 + e_1^2 + e_2^2 + e_3^2 = 1 \tag{80}$$

Hence, they are not independent.

Because the transformation matrix G can be composed of three orthogonal Euler angle transformations, it also is orthogonal. Therefore,

$$G^{-1} = G^T \tag{81}$$

and

$$\begin{bmatrix} e_{XG} \\ e_{YG} \\ e_{ZG} \end{bmatrix} = G^T \begin{bmatrix} e_{XB} \\ e_{YB} \\ e_{ZB} \end{bmatrix} \tag{82}$$

We have seen that under static conditions the G-frame components can be transformed to the B-frame via the transformation matrix G in equation (76), which is a function of the Euler parameters e_0, e_1, e_2, and e_3. These Euler parameters constitute the real numbers in the quaternion q, equation (65). Equations (78) relate the Euler parameters to angles ζ, η, ξ, and μ.

Next consider the B-frame rotating with respect to the G-frame so that at any time t the orientation is given by ζ, η, ξ, and μ through the quaternion

$$q = \cos\frac{\mu}{2} + \left(\cos\zeta \sin\frac{\mu}{2}\right)i + \left(\cos\eta \sin\frac{\mu}{2}\right)j + \left(\cos\xi \sin\frac{\mu}{2}\right)k \tag{83}$$

At a later time $t + \Delta t$ the B-frame can be related to either the G-frame or the B-frame at a time t. We choose the latter and orient the B-frame at time $t + \Delta t$ (B′-frame) to the B-frame at time t through the quaternion

$$q_\epsilon = \cos\frac{\Delta\mu}{2} + \left(\cos\zeta' \sin\frac{\Delta\mu}{2}\right)i + \left(\cos\eta' \sin\frac{\Delta\mu}{2}\right)j + \left(\cos\xi' \sin\frac{\Delta\mu}{2}\right)k \tag{84}$$

where ζ', η', and ξ' are angles specifying the direction vector S' with respect to the B-frame axes at time t. $\Delta\mu$ is the magnitude of the rotation about S'. The quaternion q_ϵ can be written

$$q_\epsilon = \left(\cos\frac{\mu}{2} + 0\cdot i + 0\cdot j + 0\cdot k\right)$$
$$+ \sin\frac{\Delta\mu}{2}\,[0 + (\cos\zeta')i + (\cos\eta')j + (\cos\xi')k] \tag{85}$$

For $\Delta\mu$ small $\sin\frac{\Delta\mu}{2} \cong \frac{\Delta\mu}{2}$ and $\cos\frac{\Delta\mu}{2} \cong 1$. Therefore,

$$q_\epsilon = 1 + \epsilon \tag{86}$$

where

$$\epsilon = \frac{\Delta\mu}{2}\,[0 + (\cos\zeta')i + (\cos\eta')j + (\cos\xi')k] \tag{87}$$

Because this rotation occurs between time t and $t + \Delta t$, we can write the quaternion relating the B′-frame to the G-frame as the product of q_ϵ (relating the B′-frame to the B-frame), and $q(t)$ (relating the B-frame to the G-frame)

$$q(t + \Delta t) = q(t)\, q_\epsilon = q(t)(1 + \epsilon) \tag{88}$$

The time rate of change of $q(t)$ is defined to be

$$\dot{q}(t) = \lim_{\Delta t \to 0} \frac{q(t + \Delta t) - q(t)}{\Delta t} \tag{89}$$

Therefore,

$$\dot{q}(t) = \lim_{\Delta t \to 0} q(t)\,\frac{\epsilon}{\Delta t} = \frac{1}{2}\, q(t)\,\dot{\mu}\,[\cos\zeta')i + (\cos\eta')j + (\cos\zeta')k] \tag{90}$$

But the components of the angular rotation vector in the B-frame axes are

$$\omega_X = \dot{\mu}\cos\zeta' \qquad \omega_Y = \dot{\mu}\cos\eta' \qquad \omega_Z = \dot{\mu}\cos\xi' \tag{91}$$

which, when substituted into equation (90), yields

$$\dot{q}(t) = \frac{1}{2}\, q(t)\,\left[\omega_X i + \omega_Y j + \omega_Z k\right] \tag{92}$$

Differentiating $q(t)$ in equation (65) yields

$$\dot{q}(t) = \dot{e}_0 + \dot{e}_1 i + \dot{e}_2 j + \dot{e}_3 k \tag{93}$$

Equating components in equations (92) and (93) gives

$$
\begin{aligned}
\dot{e}_0 &= -\frac{1}{2}\left(e_1\ \omega_X + e_2\ \omega_Y + e_3\ \omega_Z\right) \\
\dot{e}_1 &= \frac{1}{2}\left(e_0\ \omega_X + e_2\ \omega_Z - e_3\ \omega_Y\right) \\
\dot{e}_2 &= \frac{1}{2}\left(e_0\ \omega_Y - e_1\ \omega_Z + e_3\ \omega_X\right) \\
\dot{e}_3 &= \frac{1}{2}\left(e_0\ \omega_Z + e_1\ \omega_Y - e_2\ \omega_X\right)
\end{aligned}
\tag{94}
$$

which can be solved for ω_X, ω_Y, and ω_Z

$$
\begin{aligned}
\omega_X &= 2[-e_2\dot{e}_3 + e_3\dot{e}_2 + e_0\dot{e}_1 - e_1\dot{e}_0] \\
\omega_Y &= 2[+e_1\dot{e}_3 - e_3\dot{e}_1 + e_0\dot{e}_2 - e_2\dot{e}_0] \\
\omega_Z &= 2[-e_1\dot{e}_2 + e_2\dot{e}_1 - e_3\dot{e}_0 + e_0\dot{e}_3]
\end{aligned}
\tag{95}
$$

Thus knowing the four parameters, e_0, e_1, e_2, and e_3, and their rates, the components of the rotation vector can be determined.

In STEP, we assume that the angular rotation rate vector Ω_B, between the B-frame and I-frame is known. We desire to determine the attitude of the vehicle with respect to the G-frame. The rotation vector of the B-frame with respect to the G-frame, Ω_{BG}, is the difference between Ω_B and Ω_G, the later being the angular rotation vector of the G-frame with respect to the I-frame.

$$
\Omega_{BG} = \Omega_B - \Omega_G \tag{96}
$$

The inertial angular rates P, Q, and R are components of Ω_B. From figure 2, we see that

$$
\Omega_G = \left(\frac{v}{r\ \cos\varphi}\right) e_{ZI} - \left(\frac{u}{r}\right) e_{YG} \tag{97}
$$

where

$$
e_{ZI} = (\cos\varphi)\ e_{XG} - (\sin\varphi)\ e_{ZG} \tag{98}
$$

Therefore,

$$
\Omega_G = \left(\frac{v}{r}\right) e_{XG} - \left(\frac{u}{r}\right) e_{YG} - \left(\frac{v}{r\ \cos\varphi}\right)\sin\varphi\ e_{ZG} \tag{99}
$$

Using matrix notation we can write equation (96) as follows:

$$\Omega_{BG} = \begin{bmatrix} P \\ Q \\ R \end{bmatrix} - G \begin{bmatrix} \frac{v}{r} \\ -\frac{u}{r} \\ -\frac{v}{r \cos \varphi} \sin \varphi \end{bmatrix} \tag{100}$$

where G is the transformation matrix relating the B-frame to the G-frame and given in equation (79). Note that the components of Ω_{BG} are ω_X, ω_Y, and ω_Z required in equation (94). Substituting equation (100) into (94) yields

$$\begin{bmatrix} \dot{e}_0 \\ \dot{e}_1 \\ \dot{e}_2 \\ \dot{e}_3 \end{bmatrix} = \frac{1}{2} \begin{bmatrix} -e_1 & -e_2 & -e_3 \\ e_0 & -e_3 & e_2 \\ e_3 & e_0 & -e_1 \\ -e_2 & e_1 & e_0 \end{bmatrix} \left\{ \begin{bmatrix} P \\ Q \\ R \end{bmatrix} - G \begin{bmatrix} \frac{v}{r} \\ -\frac{u}{r} \\ -\frac{v}{r} \tan \varphi \end{bmatrix} \right\} \tag{101}$$

which constitutes a system of first-order, nonlinear differential equations for the Euler parameters as functions of the inertial angular rates, inertial velocity components and vehicle positions.

Because of the dependency existing in the Euler parameters, as a result of the normality equation, equation (80), only three of the scalar equations in equation (101) can be recursively updated by equation (53a). In Section IV.H, this dependency and the way the STEP accommodates it will be discussed in more detail.

D. External Accelerations

In equation (63), the external accelerations acting on the vehicle were required. The accelerations normally arise from three sources -- gravity, aerodynamics, and propulsion -- which will be described next.

1. Gravitational accelerations.- The gravitational potential including up to second harmonic terms is from reference 21.

$$U = \frac{GM}{R_E}\left\{\frac{R_E}{r} - J_2\left(\frac{R_E}{r}\right)^3 \frac{1}{2}(3 \sin^2 \varphi - 1)\right\} \tag{102}$$

where

G = universal gravitational constant

M = mass of the planet

R_E = equatorial radius

The gravitational potential may be used to obtain the gravitational force per unit mass by means of the gradient operator

$$\frac{F_{Gravity}}{m} = - \text{grad } U \tag{103}$$

In spherical polar coordinates the gradient operator is

$$\text{grad}(\ \ ) = - \frac{\partial}{\partial r}(\ \ )\, e_{ZG} + \frac{1}{r \cos \varphi} \frac{\partial}{\partial \theta}(\ \ )\, e_{YG} + \frac{1}{r} \frac{\partial}{\partial \varphi}(\ \ )\, e_{XG} \tag{104}$$

which yields

$$\begin{bmatrix} F_{XG}/m \\ F_{YG}/m \\ F_{ZG}/m \end{bmatrix}_{Gravity} = \begin{bmatrix} - \frac{\mu J}{r^4} \sin 2\varphi \\ 0 \\ \frac{\mu}{r^2} - \frac{\mu J}{r^4} (2 - 3 \cos^2 \varphi) \end{bmatrix} \tag{105}$$

where

$$\begin{aligned} \mu &= GM \\ J &= \frac{3}{2} J_2 R_E^2 \end{aligned} \tag{106}$$

2. Aerodynamic and Propulsive Accelerations.- It is in the characterization of the aerodynamic and propulsive accelerations that the STEP1 and STEP2 model formulations differ. STEP2 uses airborne accelerometer measurements that include all external accelerations of a propulsive or aerodynamic nature. These measurements are first transformed from the sensor location to the center of gravity by the following transformation:

$$\begin{bmatrix} a_{XB} \\ a_{YB} \\ a_{ZB} \end{bmatrix} = \begin{bmatrix} a_{XP} \\ a_{YP} \\ a_{ZP} \end{bmatrix} - \begin{bmatrix} -(Q^2 + R^2) & (PQ - \dot{R}) & (PR + \dot{Q}) \\ (PQ + \dot{R}) & -(P^2 + R^2) & (QR - \dot{P}) \\ (PR - \dot{Q}) & (QR + \dot{P}) & -(P^2 + Q^2) \end{bmatrix} \begin{bmatrix} x_P \\ y_P \\ z_P \end{bmatrix} \tag{107}$$

The accelerations acting through the center of gravity are then transformed to the G-frame via the transformation equation

$$\begin{bmatrix} F_{XG}/m \\ F_{YG}/m \\ F_{ZG}/m \end{bmatrix} = G^T \begin{bmatrix} a_{XB} \\ a_{YB} \\ a_{ZB} \end{bmatrix} \tag{108}$$

where G is given by equation (79).

In the STEP1 formulation, no propulsive terms are included, and the aerodynamic terms are expressed in the B-frame. The B-frame components are transformed to the G-frame as follows

$$\begin{bmatrix} F_{XG}/m \\ F_{YG}/m \\ F_{ZG}/m \end{bmatrix} = G^T \frac{1}{m} \begin{bmatrix} F_{XB} \\ F_{YB} \\ F_{ZB} \end{bmatrix} \tag{109}$$

The aerodynamic force coefficients can be expressed in terms of the lift, drag, and sideforce coefficients C_L, C_D, and C_Y (see fig. 4) where C_L and C_D are directed normal to, and along the velocity projection in the $e_{XB} - e_{ZB}$ plane. C_Y produces a sideforce, Y, acting in the direction of e_{YB}. The lift, drag, and sideforce are transformed to the B-frame as follows:

$$\begin{bmatrix} F_{XB} \\ F_{YB} \\ F_{ZB} \end{bmatrix} = qS \begin{bmatrix} \cos\alpha & 0 & -\sin\alpha \\ 0 & 1 & 0 \\ \sin\alpha & 0 & \cos\alpha \end{bmatrix} \begin{bmatrix} -C_D \\ C_Y \\ -C_L \end{bmatrix} \tag{110}$$

where α is the angle of attack, q the dynamic pressure, and S the reference area.

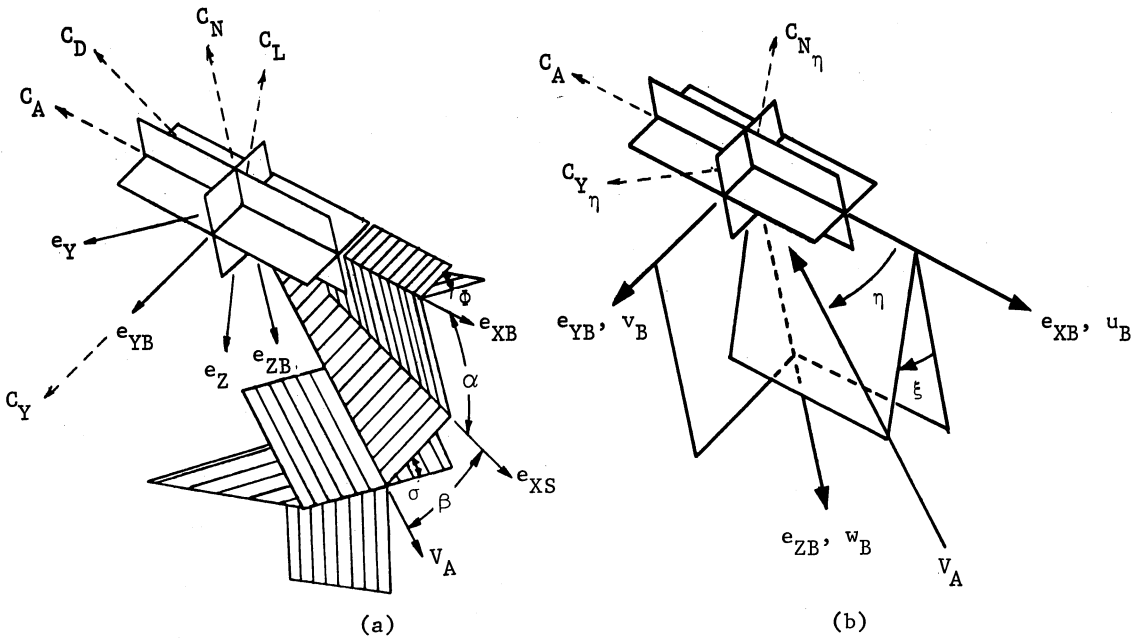

Figure 4.- Vehicle Attitude Angles

The aerodynamic coefficients can also be expressed in terms of the axial force, normal force, and sideforce, C_A, C_N, and C_Y. C_A and C_N produce forces that act in the $-e_{XB}$ and $-e_{ZB}$ directions, C_Y produces a force acting along e_{YB}. The transformation to the B-frame is

$$\begin{bmatrix} F_{XB} \\ F_{YB} \\ F_{ZB} \end{bmatrix} = qS \begin{bmatrix} -C_A \\ C_Y \\ -C_N \end{bmatrix} \tag{111}$$

The aerodynamic coefficients are sometimes expressed in the plane and normal to the plane containing e_{XB} and the velocity vector (see fig. 4). The axial coefficient, C_A is directed along the $-e_{XB}$ axis; the normal coefficient C_{N_η} is directed

normal to the e_{XB} axis in the e_{XB} - V_A plane; and the side-force coefficient, C_{Y_η}, directed normal to the e_{XB} axis and normal to the e_{XB} - V_A plane. This characterization transforms to the B-frame as follows:

$$\begin{bmatrix} F_{XB} \\ F_{YB} \\ F_{ZB} \end{bmatrix} = qS \begin{bmatrix} 1 & 0 & 0 \\ 0 & \cos\xi & \sin\xi \\ 0 & -\sin\xi & \cos\xi \end{bmatrix} \begin{bmatrix} -C_A \\ C_{Y_\eta} \\ -C_{N_\eta} \end{bmatrix} \tag{112}$$

The dynamic pressure, q, is

$$q = \frac{1}{2}\rho V_A^2 \tag{113}$$

where ρ is the atmospheric density, and V_A is the velocity of the vehicle relative to the atmosphere. V_A can be calculated from u, v, and w after atmospheric winds are vectorially added. Let u_w be the wind component from the north and v_w the component from the east, then the components of the velocity vector relative to the atmosphere are

$$\begin{aligned} u_A &= u + u_w \\ v_A &= v - r\Omega_P \cos\phi + v_W \\ w_A &= w \end{aligned} \tag{114}$$

thus,

$$V_A = \sqrt{u_A^2 + v_A^2 + w_A^2} \tag{115}$$

The aerodynamic coefficients depend on the steering angles α, β, or η, ξ. These angles can be calculated from the components of V_A in the B-frame which are obtained by transforming u_A, v_A, w_A as follows:

$$\begin{bmatrix} u_B \\ v_B \\ w_B \end{bmatrix} = G \begin{bmatrix} u_A \\ v_A \\ w_A \end{bmatrix} \tag{116}$$

The steering angles can then be seen from figure 4 to be

$$\sin \alpha = \frac{w_B}{\sqrt{u_B^2 + w_B^2}} \qquad \cos \alpha = \frac{u_B}{\sqrt{u_B^2 + w_B^2}} \tag{117}$$

$$\sin \beta = \frac{v_B}{V_A} \qquad \cos \beta = \frac{\sqrt{u_B^2 + w_B^2}}{V_A} \tag{118}$$

$$\sin \eta = \frac{\sqrt{v_B^2 + w_B^2}}{V_A} \qquad \cos \eta = \frac{u_B}{V_A} \tag{119}$$

$$\sin \xi = \frac{v_B}{\sqrt{v_B^2 + w_B^2}} \qquad \cos \xi = \frac{w_B}{\sqrt{v_B^2 + w_B^2}} \tag{120}$$

The transformation matrix G in equation (116) relates components in the B-frame to components in the G-frame and is a function of the body attitude (orientation) given in equation (79).

E. Atmosphere Model

The equations solved in determining atmospheric properties are developed in references 22 and 23. For completeness they are repeated below. It is assumed that the defining characteristic of the atmosphere consists of a molecular scale temperature, T_M, versus geopotential altitude H, geometric altitude, h_o, or a combination of both H and h_o. This T_M versus H or h_o dependence consists of a series of straight-line (constant gradient) segments as shown in figure 5. The geopotential altitude can be calculated as a function of the geometric altitude from the following equation (ref. 22).

$$H = \frac{R_A h_o}{R_A + h_o} \tag{121}$$

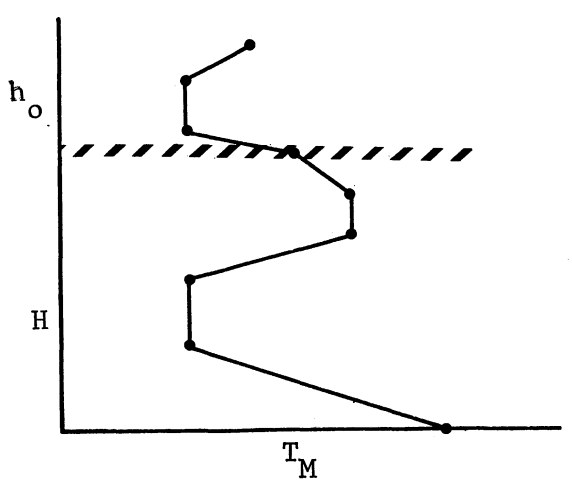

Figure 5.- Molecular Scale Temperature Altitude Profile

where R_A is the average Earth radius at a latitude of 45° 33' 32". This equation, although approximate, is good to within 14 ft at an altitude of 1.0×10^6 ft.

The corner points connecting the straight-line segments are referred to as base altitudes, base temperatures, etc. From a table of base altitudes, base temperatures, and the slope dT_M/dH within the linear segments $\left(L_M\right)$, temperature can be calculated at any desired altitude from the following equation:

$$T_M = T_{MB_i} + L_{M_i}\left(H-H_{B_i}\right) \tag{122}$$

Values of T_{M_B} and L_{M_i} versus H_{B_i} and Z_{B_i} are presented in tables 1 and 2 for the 1962 U. S. Standard and 1959 ARDC atmospheres, respectively. The atmospheric pressure is determined as follows:

$$p = p_{B_i}\left[\frac{T_{M_{B_i}}}{T_M}\right]^{\left(\frac{g_o M_o}{R^*}\right)\Big/L_{M_i}} \quad \text{for segments with } L_M \neq 0 \tag{123a}$$

$$p = p_{B_i} \exp\left[-\left(\frac{g_o M_o}{R^*}\right)\frac{\left(H-H_{B_i}\right)}{T_{M_{B_i}}}\right] \quad \text{for segments with } L_M = 0 \tag{123b}$$

where p_{B_i} is base pressures corresponding to the base altitudes. These base pressures can be calculated once the sea level pressure, p_o, and the temperature profile has been specified. Having calculated the temperature and pressure, the density, ρ, speed of sound, c_s, and atmospheric viscosity, μ_A, are determined as follows.

$$\rho = \left(\frac{M_o}{R^*}\right)\frac{p}{T_M} \tag{124}$$

$$c_s = \left(\frac{\gamma R^*}{M_o}\right)^{\frac{1}{2}} T_M^{\frac{1}{2}} \tag{125}$$

TABLE 1.- 1959 ARDC ATMOSPHERE TEMPERATURE PROFILE

H, m	T_M, °K	L_M, °K/m
0	288.16	-0.0065
11 000	216.66	0.0000
25 000	216.66	0.0030
47 000	282.66	0.0000
53 000	282.66	-0.0045
79 000	165.66	0.0000
90 000	165.66	0.0040
105 000	225.66	0.0200
160 000	1325.66	0.0100
170 000	1425.66	0.0050
200 000	1575.66	0.0035
700 000	3325.66	

TABLE 2.- 1962 U.S. STANDARD ATMOSPHERE TEMPERATURE PROFILE

h_o, m	H, m	T, °K	L, °K/m
	0	288.15	-0.0065
	11 000	216.65	0.0000
	20 000	216.65	0.0010
	32 000	228.65	0.0028
	47 000	270.65	0.0000
	52 000	270.65	-0.0020
	61 000	252.65	-0.0040
	79 000	180.65	0.0000
90 000	88 743	180.65	0.0030
100 000		210.65	0.0050
110 000		260.65	0.0100
120 000		360.65	0.0200
150 000		960.65	0.0150
160 000		1110.65	0.0100
170 000		1210.65	0.0070
190 000		1350.65	0.0050
230 000		1550.65	0.0040
300 000		1830.65	0.0033
400 000		2160.65	0.0026
500 000		2420.65	0.0017
600 000		2590.65	0.0011
700 000		2700.65	

$$\mu_A = \frac{\beta T_M^{\frac{3}{2}}}{T_M + S} \tag{126}$$

where g_o is an acceleration of gravity at sea level, M_o is the molecular weight of air at sea level, R^* is the gas constant, γ is the ratio of specific heats, and β and S are Sutherland's constants. There are slight differences between the values of these constants in references 22 and 23. To maintain consistency in STEP, the following values from reference 23 are used:

$$M_o = 28.9644$$

$$R^* = 8.31432 \times 10^3 \frac{J}{(°K)(kg\text{-}mol)}$$

$$\gamma = 1.40$$

$$\beta = 1.458 \times 10^{-6} \frac{kg}{sec\ m\ (°K)^{\frac{1}{2}}}$$

$$S = 110.4\ °K = 198.72\ °R$$

$$g_o = 9.80665\ m/sec^2 = 32.1741\ ft/sec^2$$

In the 1959 ARDC and 1962 U. S. Standard atmospheres, the molecular weight varies with altitude above approximately 90 km. In STEP atmosphere, the molecular weight is assumed constant resulting in a slight discrepancy above 90 km. In the 1962 U. S. Standard atmosphere, geometric altitude is used above 90 km. In STEP, the geometric altitude is transformed to geopotential altitude, which is used throughout. Thus, above 90 km, a constant slope of molecular scale temperature versus geopotential altitude is used instead of the constant slope of temperature versus geometric altitude. Nevertheless, the 1959 ARDC and 1962 U. S. Standard atmospheres used in STEP agree remarkably well with those published in references 22 and 23 and shown in table 3.

F. STEP1 and STEP2 Dynamic Models

The dynamic models in the STEP1 and STEP2 programs can now be summarized. The translational and rotational equations of motion are obtained from equations (63), (64), (101), and (105) and are as follows:

TABLE 3.- ATMOSPHERE ACCURACY COMPARISON

1959 ARDC						
	Reference 22			STEP1		
h_o, m	H, m	p, nt/m^2	ρ, kg/m^3	H, m	p, nt/m^2	ρ, kg/m^3
0	0	1.01325+5	1.2250+0	0	1.01325+5	1.2249+0
10 000	9 984	2.6500+4	4.1351-1	9 984	2.65009+4	4.1351-1
20 000	19 937	5.5293+3	8.8909-2	19 937	5.52968+3	8.8912-2
30 000	29 859	1.1855+3	1.7861-2	29 860	1.18561+3	1.7862-2
40 000	39 750	2.9977+2	4.0028-3	39 751	2.99797+2	4.0028-3
50 000	49 610	8.7858+1	1.0829-3	49 612	8.78625+1	1.0829-3
60 000	59 439	2.5657+1	3.5235-4	59 442	2.56561+1	3.5234-4
70 000	69 238	6.0209+0	1.0008-4	69 242	6.01926+0	1.0006-4
80 900	79 006	1.008+0	2.120-5	79 011	1.0076+0	2.1189-5
90 000	88 743	1.353-1	2.846-6	88 751	1.3521-1	2.8434-6
100 000	98 451	2.138-2	3.734-7	98 460	2.1363-2	3.7304-7
150 000	146 542	5.334-4	1.759-9	146 562	5.3356-4	1.7587-9
200 000	193 899	1.629-4	3.673-10	193 934	1.6294-4	3.6732-10

1962 U. S. standard						
	Reference 23			STEP1		
h_o, m	H, m	p, nt/m^2	ρ, kg/m^3	H, m	p, nt/m^2	ρ, kg/m^3
0	0	1.01325+5	1.2250+0	0	1.013251+5	1.2250+0
10 000	9 984	2.64999+4	4.1351-1	9 984.4	2.64995+4	4.1350-1
20 000	19 937	5.52930+3	8.8910-2	19 937.6	5.52899+3	8.8905-2
30 000	29 859	1.19703+3	1.8410-2	29 859.9	1.19688+3	1.8407-2
40 000	39 750	2.87143+2	3.9957-3	39 751.3	2.87087+2	3.9948-3
50 000	49 610	7.97790+1	1.0269-3	49 612.0	7.97564+1	1.0265-3
60 000	59 439	2.24606+1	3.0592-4	59 442.2	2.24509+1	3.0579-4
70 000	69 237	5.52047+0	8.7535-5	69 241.9	5.51666+0	8.7482-5
80 000	79 006	1.03665+0	1.999-5	79 011.4	1.03547+0	1.9968-5
90 000	88 743	1.6438-1	3.170-6	88 750.8	1.64149-1	3.1650-6
100 000	98 451	3.0075-2	4.974-7	98 460.1	3.00326-2	4.9656-7
150 000	146 541	5.0617-4	1.836-9	146 561.7	5.06511-4	1.8362-9
200 000	193 898	1.3339-4	3.318-10	193 933.9	1.33465-4	3.3185-10

$$\begin{bmatrix} \dot{u} \\ \dot{v} \\ \dot{w} \end{bmatrix} = \begin{bmatrix} a_{XG} \\ a_{YG} \\ a_{ZG} \end{bmatrix} + \frac{1}{r} \begin{bmatrix} uw - v^2 \tan \varphi \\ uv \tan \varphi + vw \\ -(u^2 + v^2) + \mu/r \end{bmatrix} + \begin{bmatrix} \Delta\dot{u}_{OBL} \\ 0 \\ \Delta\dot{w}_{OBL} \end{bmatrix} \tag{127}$$

$$\begin{bmatrix} \dot{h} \\ \dot{\varphi} \\ \dot{\theta} \end{bmatrix} = \begin{bmatrix} -w \\ u/r \\ v/r \cos \varphi - \Omega_P \end{bmatrix} \tag{128}$$

$$\begin{bmatrix} \dot{e}_0 \\ \dot{e}_1 \\ \dot{e}_2 \\ \dot{e}_3 \end{bmatrix} = \frac{1}{2} \begin{bmatrix} -e_1 & -e_2 & -e_3 \\ e_0 & -e_3 & e_2 \\ e_3 & e_0 & -e_1 \\ -e_2 & e_1 & e_0 \end{bmatrix} \begin{bmatrix} P \\ Q \\ R \end{bmatrix} - \frac{1}{2r} \begin{bmatrix} -e_1 & -e_2 & -e_3 \\ e_0 & e_3 & -e_2 \\ -e_3 & e_0 & e_1 \\ e_2 & -e_1 & e_0 \end{bmatrix} \begin{bmatrix} v \\ -u \\ -v \tan \varphi \end{bmatrix} \tag{129}$$

where

$$\begin{bmatrix} \Delta\dot{u}_{OBL} \\ \Delta\dot{w}_{OBL} \end{bmatrix} = -\frac{\mu J}{r^4} \begin{bmatrix} \sin 2\varphi \\ -3 \cos^2 \varphi + 2 \end{bmatrix} \tag{130}$$

and

$$r = R_E + h \tag{131}$$

The accelerations in the G-frame are obtained from accelerations in the B-frame as shown in equation (108)

$$\begin{bmatrix} a_{XG} \\ a_{YG} \\ a_{ZG} \end{bmatrix} = G^T \begin{bmatrix} a_{XB} \\ a_{YB} \\ a_{ZB} \end{bmatrix} \tag{132}$$

where the transformation matrix G is from equation (79)

$$[G] = \begin{bmatrix} (e_0^2 + e_1^2 - e_2^2 - e_3^2) & 2(e_1e_2 + e_0e_3) & 2(e_1e_3 - e_0e_2) \\ 2(e_1e_2 - e_0e_3) & (e_0^2 - e_1^2 + e_2^2 - e_3^2) & 2(e_0e_1 + e_2e_3) \\ 2(e_1e_3 + e_0e_2) & 2(e_2e_3 - e_0e_1) & (e_0^2 - e_1^2 - e_2^2 + e_3^2) \end{bmatrix} \tag{133}$$

The manner in which the body oriented accelerations are calculated in STEP2 and STEP2 differ and will, therefore, be presented separately.

1. STEP1.- The accelerations acting through the center of gravity are synthesized from the aerodynamic force coefficient, dynamic pressure and mass as described in equations (108) thru (112).

$$\begin{bmatrix} a_{XB} \\ a_{YB} \\ a_{ZB} \end{bmatrix} = \frac{qS}{m} \left\{ \begin{array}{l} \begin{bmatrix} -C_A(\alpha,\beta,M) \\ C_Y(\alpha,\beta,M) \\ -C_N(\alpha,\beta,M) \end{bmatrix} \qquad (134a) \\ \begin{bmatrix} \cos\alpha & 0 & -\sin\alpha \\ 0 & 1 & 0 \\ \sin\alpha & 0 & \cos\alpha \end{bmatrix} \begin{bmatrix} -C_D(\alpha,\beta,M) \\ C_Y(\alpha,\beta,M) \\ -C_L(\alpha,\beta,M) \end{bmatrix} \qquad (134b) \\ \begin{bmatrix} 1 & 0 & 0 \\ 0 & \cos\xi & \sin\xi \\ 0 & -\sin\xi & \cos\xi \end{bmatrix} \begin{bmatrix} -C_A(\eta,\xi,M) \\ C_{Y_\eta}(\eta,\xi,M) \\ -C_{N_\eta}(\eta,\xi,M) \end{bmatrix} \qquad (134c) \end{array} \right.$$

It is an easy task to modify the program to include Reynolds number and flap deflection dependence of the aerodynamic coefficients. The flap deflections, however, must be obtained from airborne sensors.

The steering function α, β, η, and ξ are obtained from equations (117) thru (120) to be

$$\sin\alpha = \frac{w_B}{\sqrt{u_B^2 + w_B^2}} \qquad \cos\alpha = \frac{u_B}{\sqrt{u_B^2 + w_B^2}} \tag{135}$$

$$\sin \beta = \frac{v_B}{V_A} \qquad \cos \beta = \frac{\sqrt{u_B^2 + w_B^2}}{V_A} \tag{136}$$

$$\sin \eta = \frac{\sqrt{v_B^2 + w_B^2}}{V_A} \qquad \cos \eta = \frac{u_B}{V_A} \tag{137}$$

$$\sin \xi = \frac{v_B}{\sqrt{v_B^2 + w_B^2}} \qquad \cos \xi = \frac{w_B}{\sqrt{v_B^2 + w_B^2}} \tag{138}$$

where

$$\begin{bmatrix} u_B \\ v_B \\ w_B \end{bmatrix} = G \begin{bmatrix} u_A \\ v_A \\ w_A \end{bmatrix} \tag{139}$$

with

$$\begin{aligned} u_A &= u + u_W \left(h_o\right) \\ v_A &= v - r\Omega_P \cos \varphi + v_W \left(h_o\right) \\ w_A &= w \end{aligned} \tag{140}$$

and

$$V_A = \sqrt{u_A^2 + v_A^2 + w_A^2} = \sqrt{u_B^2 + v_B^2 + w_B^2} \tag{141}$$

The dynamic pressure and Mach number are

$$q = \frac{1}{2} \rho \ V_A^2 \tag{142}$$

$$M = \frac{V_A}{c_s} \tag{143}$$

The density, ρ, speed of sound, c_s, and atmospheric winds are functions of the altitude above an oblate planet h_o, which is

$$h_o = h + R_E - R_o \tag{144}$$

where the oblate planet radius R_o is

$$R_o = R_E \sqrt{1 + \left[\left(\frac{R_E}{R_P}\right)^2 - 1\right] \sin^2 \varphi} \tag{145}$$

2. STEP2.- In STEP2, the body oriented accelerations acting through the center of gravity are calculated from the airborne accelerometer measurements via equation (107)

$$\begin{bmatrix} a_{XB} \\ a_{YB} \\ a_{ZB} \end{bmatrix} = \begin{bmatrix} a_{XP} \\ a_{YP} \\ a_{ZP} \end{bmatrix} - \begin{bmatrix} -(Q^2 + R^2) & (PQ - \dot{R}) & (PR + \dot{Q}) \\ (PQ + \dot{R}) & -(P^2 + R^2) & (QR - \dot{P}) \\ (PR - \dot{Q}) & (QR + \dot{P}) & -(P^2 + Q^2) \end{bmatrix} \begin{bmatrix} x_P \\ y_P \\ z_P \end{bmatrix} \tag{146}$$

G. STEP1 and STEP2 Error Models

Within the equation of motion are many variables that are subject to systematic error. These errors result from the quantities being measured (e.g., inertial angular rates and accelerations) or not being known or modeled precisely (e.g., atmospheric density, winds, mass, aerodynamic coefficients). To account for these systematic errors, the following error models are included in STEP. The coefficients, C_i, can either be specified with absolute certainty, estimated along with the state variables, or an uncertainty assigned to them to degrade the covariance matrix of state errors.

The model for correcting the a priori aerodynamic coefficients in STEP1 is

$$\left.\begin{bmatrix} C_D \\ C_Y \\ C_L \end{bmatrix}\right\} = \left\{\underbrace{\begin{bmatrix} C_{D_M} \\ C_{Y_M} \\ C_{L_M} \end{bmatrix}}_{\text{A priori aero coefficients}}\right\} + \underbrace{\begin{bmatrix} C_1 \\ C_2 \\ C_3 \end{bmatrix}}_{\text{Bias}} + \left\{\underbrace{\begin{bmatrix} C_4\ \alpha^2 \\ C_5\ \beta \\ C_6\ \alpha \end{bmatrix}}_{\text{Steering angle correction}}\right\} + \underbrace{\begin{bmatrix} C_7 \\ C_8 \\ C_9 \end{bmatrix} \frac{1}{(M+1)^2}}_{\text{Mach number correction}} + \underbrace{\begin{bmatrix} C_{10} \\ C_{11} \\ C_{12} \end{bmatrix} \frac{M^{.618}}{\sqrt{R_e}}}_{\text{Viscous correction}}$$

$$\left.\begin{bmatrix} C_A \\ C_Y \\ C_N \end{bmatrix}\right\} = \left\{\begin{bmatrix} C_{A_M} \\ C_{Y_M} \\ C_{N_M} \end{bmatrix}\right\} + \begin{bmatrix} C_1 \\ C_2 \\ C_3 \end{bmatrix} + \left\{\begin{bmatrix} C_4\ \alpha^2 \\ C_5\ \beta \\ C_6\ \alpha \end{bmatrix}\right\} + \begin{bmatrix} C_7 \\ C_8 \\ C_9 \end{bmatrix} \frac{1}{(M+1)^2} + \begin{bmatrix} C_{10} \\ C_{11} \\ C_{12} \end{bmatrix} \frac{M^{.618}}{\sqrt{R_e}} \tag{147}$$

$$\left.\begin{bmatrix} C_A \\ C_{Y_\eta} \\ C_{N_\eta} \end{bmatrix}\right\} = \left\{\begin{bmatrix} C_{A_M} \\ C_{Y_{\eta_M}} \\ C_{N_{\eta_M}} \end{bmatrix}\right\} + \begin{bmatrix} C_1 \\ C_2 \\ C_3 \end{bmatrix} + \left\{\begin{bmatrix} C_4\ \eta^2 \\ C_5\ \xi \\ C_6\ \eta \end{bmatrix}\right\} + \begin{bmatrix} C_7 \\ C_8 \\ C_9 \end{bmatrix} \frac{1}{(M+1)^2} + \begin{bmatrix} C_{10} \\ C_{11} \\ C_{12} \end{bmatrix} \frac{M^{.618}}{\sqrt{R_e}}$$

where the Reynold's number R_e is

$$R_e = \frac{\rho\ V_A \ell}{\mu_A} \tag{148}$$

The a priori mass time history m_M used in STEP1 can be corrected by a second degree polynomial in time between times t_1 and t_2 as follows:

$$\begin{aligned} m(t) &= m_M(t) && \text{for } t < t_1 \\ &= m_M(t) - (C_{16} + C_{17}\tau + C_{18}\tau^2) && \text{for } t_1 \leq t \leq t_2 \\ &= m_M(t) - (C_{16} + C_{17}\tau_2 + C_{18}\tau_2^2) && \text{for } t_2 < t \end{aligned} \tag{149}$$

where

$$\tau = t - t_1 \text{ and } \tau_2 = t_2 - t_1 \tag{150}$$

This model permits the inclusion of a bias by estimating C_{16} alone (C_{17} and C_{18} specified zero with absolute certainty). Care must be exercised in specifying the error coefficients to be estimated across t_1 because the coefficient C_{16} permits a discontinuity in the mass time history at t_1.

The error model on atmospheric density in STEP1 is

$$\rho = C_{21}\ \rho_M\left(h_o\right) + C_{22}\ e^{C_{23}h_o} \tag{151}$$

where $\rho_M\left(h_o\right)$ can be specified as an ARDC 1959 or U.S. Standard 1962 atmosphere. Other atmospheres can be included for $\rho_M\left(h_o\right)$ by specifying their temperature, altitude profile, and sea level pressure.

The error model on atmospheric winds in STEP1 is

$$\begin{aligned} u_W &= u_{WM}\left(h_o\right) + C_{26} \\ v_W &= v_{WM}\left(h_o\right) + C_{27} \end{aligned} \tag{152}$$

where u_{WM} and v_{WM} are a priori specified wind altitude profiles.

The error model on the center of gravity to accelerometer distances x_p, y_p, z_p used to transform the accelerations to and from the center of gravity is

$$\begin{bmatrix} x_p \\ y_p \\ z_p \end{bmatrix} = \begin{bmatrix} x_{P_M}(t) \\ y_{P_M}(t) \\ z_{P_M}(t) \end{bmatrix} + \begin{bmatrix} C_{31} \\ C_{32} \\ C_{33} \end{bmatrix} \tag{153}$$

The error model for inertial angular rates used in STEP1 and STEP2 is

$$\begin{bmatrix} P \\ Q \\ R \end{bmatrix} = \begin{bmatrix} C_{36} & C_{37} & C_{38} \\ C_{39} & C_{40} & C_{41} \\ C_{42} & C_{43} & C_{44} \end{bmatrix} \begin{bmatrix} P_M \\ Q_M \\ R_M \end{bmatrix} + \begin{bmatrix} C_{45} \\ C_{46} \\ C_{47} \end{bmatrix} + \begin{bmatrix} C_{48} & C_{51} & C_{54} & C_{57} \\ C_{49} & C_{52} & C_{55} & 0 \\ C_{50} & C_{53} & C_{56} & 0 \end{bmatrix} \begin{bmatrix} a_{XP} \\ a_{YP} \\ a_{ZP} \\ \bar{a}_P \end{bmatrix} \tag{154}$$

where

$$\bar{a}_P = \frac{2a_{XP}\ a_{ZP}}{\sqrt{a_{XP}^2 + a_{ZP}^2}} \tag{155}$$

The anisoelastic correction assumes the lateral acceleration a_{YB} small.

The angular accelerations $\dot{P}$, $\dot{Q}$, and $\dot{R}$ in equation (146) are obtained by differentiating equation (154) and (155) yielding

$$\begin{bmatrix} \dot{P} \\ \dot{Q} \\ \dot{R} \end{bmatrix} = \begin{bmatrix} C_{36} & C_{37} & C_{38} \\ C_{39} & C_{40} & C_{41} \\ C_{42} & C_{43} & C_{44} \end{bmatrix} \begin{bmatrix} \dot{P}_M \\ \dot{Q}_M \\ \dot{R}_M \end{bmatrix} + \begin{bmatrix} C_{48} & C_{51} & C_{54} & C_{57} \\ C_{49} & C_{52} & C_{55} & 0 \\ C_{50} & C_{53} & C_{56} & 0 \end{bmatrix} \begin{bmatrix} \dot{a}_{XP} \\ \dot{a}_{YP} \\ \dot{a}_{ZP} \\ \dot{\bar{a}}_P \end{bmatrix} \tag{156}$$

where

$$\dot{\bar{a}}_P = \bar{a}_P \left[\frac{\dot{a}_{ZP}}{a_{ZP}} + \frac{\dot{a}_{XP}}{a_{XP}} - \frac{\left(a_{XP}\ \dot{a}_{XP} + a_{ZP}\ \dot{a}_{ZP}\right)}{a_{XP}^2 + a_{ZP}^2} \right] \tag{157}$$

The time rate of the measured inertial angular rates $\dot{P}_M$, $\dot{Q}_M$, and $\dot{R}_M$ are calculated by numerically differencing the discrete input data points.

In STEP1, the accelerations at the center of gravity are calculated from the aerodynamic forces acting on the vehicle. These accelerations must be transformed to the inertial measuring unit (gyros) to provide the accelerations in equation (155). The transformation is

$$\begin{bmatrix} a_{XP} \\ a_{YP} \\ a_{ZP} \end{bmatrix} = \begin{bmatrix} a_{XB} \\ a_{YB} \\ a_{ZB} \end{bmatrix} + \begin{bmatrix} -(Q^2 + R^2) & (PQ - \dot{R}) & (PR + \dot{Q}) \\ (PQ + \dot{R}) & -(P^2 + R^2) & (QR - \dot{P}) \\ (PR - \dot{Q}) & (QR + \dot{P}) & -(P^2 + Q^2) \end{bmatrix} \begin{bmatrix} x_p \\ y_p \\ z_p \end{bmatrix} \tag{158}$$

As evident in equations (154), the accelerations must be known to calculate the inertial angular rates. However, in equation (158) the inertial angular rates must be known to calculate the accelerations. Thus, an iteration loop around equations (154) and (158) is necessary in STEP1. The acceleration rates in equation (156) follow.

The error model for the accelerations in STEP2 is

$$\begin{bmatrix} a_{XP} \\ a_{YP} \\ a_{ZP} \end{bmatrix} = \begin{bmatrix} C_{61} & C_{62} & C_{63} \\ C_{64} & C_{65} & C_{66} \\ C_{67} & C_{68} & C_{69} \end{bmatrix} \begin{bmatrix} a_{XM} \\ a_{YM} \\ a_{ZM} \end{bmatrix} + \begin{bmatrix} C_{70} \\ C_{71} \\ C_{72} \end{bmatrix} \tag{159}$$

The time rate of change of acceleration required in equation (156) and (157) is obtained by differentiating equation (159) yielding

$$\begin{bmatrix} \dot{a}_{XP} \\ \dot{a}_{YP} \\ \dot{a}_{ZP} \end{bmatrix} = \begin{bmatrix} C_{61} & C_{62} & C_{63} \\ C_{64} & C_{65} & C_{66} \\ C_{67} & C_{68} & C_{69} \end{bmatrix} \begin{bmatrix} \dot{a}_{XM} \\ \dot{a}_{YM} \\ \dot{a}_{ZM} \end{bmatrix} \tag{160}$$

The time rate of the measured acceleration $\dot{a}_{XM}$, $\dot{a}_{YM}$, and $\dot{a}_{ZM}$ are obtained by numerically differencing the discrete input data points.

Note that many of the C_i's for i between 1 and 75 are unused in the error models. This was done to provide coefficients for future addition of terms to the error models for specific applications.

H. STEP State Variable Dependency

The dynamical model used in STEP contains 10 nonlinear ordinary differential equations, equation (127) thru (129). However, only nine of these equations are independent, a requirement on the dynamical system used in the filter equations, equations (53). The dependency arises in the four-parameter system of Euler parameters, equations (129), that describe the vehicle attitude. The Euler parameters must satisfy the normality constraint, equation (80). Therefore, one Euler parameter can be calculated from the remaining three by means of equations (80)

$$e_3 = \sqrt{1 - (e_0^2 + e_1^2 + e_2^2)} \tag{161}$$

However, its sign cannot be determined because the constraining equation involves squares of the Euler parameters. Taking differentials of equation (161) yields

$$\delta e_3 = - \frac{1}{e_3} \left[e_0 \ \delta e_0 + e_1 \ \delta e_1 + e_2 \ \delta e_2 \right] \tag{162}$$

which shows that the sign and magnitude of a perturbation in e_3 can be determined from perturbations in the other Euler parameters. Thus, STEP includes only nine of the state variables, u, v, w, h, φ, θ, e_o, e_1, and e_2 in the recursive filtering described by equations (53). The correction in e_3 is calculated by equation (162) from the minimum variance corrections calculated for e_o, e_1, and e_2 in equation (53a). Because the state transition matrix does reflect the normality constraint, all 10 state variables are propagated between measurements and a 10-component state vector is maintained in the covariance and correlation matrices P, C_{uz}, and C_{vz}. In equations (53b) thru (53d), for updating and correlation matrices, the tenth rows (and tenth column for P because of symmetry) are calculated from the following equations:

$$\begin{aligned} P_{10,i} &= NP' \\ P_{i,10} &= P'N^T \\ P_{10,10} &= NP'N^T \\ C_{vz} &= N\,C'_{vz} \\ C_{vz} &= N\,C'_{vz} \end{aligned} \tag{163}$$

where P', C'_{vz}, and C'_{vz} are the 9x9, 9xq, and 9xr submatrices that reflect only the nine component states that were updated via equations (53). The transformation N is the 9x1 matrix containing elements that are partial derivatives of e_3, in equation (161), with respect to the nine state vector components

$$N^T = \left[0 \; 0 \; 0 \; 0 \; 0 \; 0 \; \frac{-e_0}{e_3} \; \frac{-e_1}{e_3} \; \frac{-e_2}{e_3} \right] \tag{164}$$

V. LINEARIZED EQUATIONS OF MOTION

The equations of motion and error models described in Sections IV.F and IV.G constitute the dynamic system described by equation (41). The state variables X are u, v, w, h, ϕ, θ, e_0, e_1, e_2, and e_3. The model parameters W and U are composed of the error coefficients C_i, which are governed by differential equations that state that $\dot{C}_i = 0$, i.e., the error coefficients are constant. The user can specify whether the error coefficients are in W (to be estimated), in U (uncertain but not estimated), or are known with absolute certainty. Because all coefficients can potentially be in Z or U, it is necessary that partial derivatives of the state variables X with respect to state variables and error coefficients be known to form the linear differential equations to be integrated to obtain the transition matrices φ and θ in equation (50). These linear differential equations can be written as follows:

$$\begin{bmatrix} \delta\dot{u} \\ \delta\dot{v} \\ \delta\dot{w} \\ \delta\dot{h} \\ \delta\dot{\phi} \\ \delta\dot{\theta} \\ \delta\dot{e}_0 \\ \delta\dot{e}_1 \\ \delta\dot{e}_2 \\ \delta\dot{e}_3 \end{bmatrix} = \begin{bmatrix} \partial\dot{u}/\partial u & \partial\dot{u}/\partial v & \partial\dot{u}/\partial w & \cdots & \partial\dot{u}/\partial e_3 & \partial\dot{u}/\partial C_i & \cdots & \partial\dot{u}/\partial C_j \\ \partial\dot{v}/\partial u & & & \cdots & & & & \\ \partial\dot{w}/\partial u & & & \cdots & & & & \\ \partial\dot{h}/\partial u & & & \cdots & & & & \\ \partial\dot{\phi}/\partial u & & & \cdots & & & & \\ \partial\dot{\theta}/\partial u & & & \cdots & & & & \\ \partial\dot{e}_0/\partial u & & & \cdots & & & & \\ \partial\dot{e}_1/\partial u & & & \cdots & & & & \\ \partial\dot{e}_2/\partial u & & & \cdots & & & & \\ \partial\dot{e}_3/\partial u & & & \cdots & & & & \end{bmatrix} \begin{bmatrix} \delta u \\ \delta v \\ \delta w \\ \delta h \\ \delta\phi \\ \delta\theta \\ \delta e_0 \\ \delta e_1 \\ \delta e_2 \\ \delta e_3 \\ \delta C_i \\ \vdots \\ \delta C_j \end{bmatrix} \tag{165}$$

The partial derivatives of the state variables rates u, v, w, h, ... e_3 with respect to the state variables are obtained by differentiating the equations of motion, equations (127) thru (129). These partial derivatives for STEP1 and STEP2 follow, STEP2 being presented first because it is simpler.

A. STEP2 Linear Equation Coefficients

The coefficients of the linear equations of motion for STEP2 consisting of the partial derivative of the equations of motion with respect to state variables are presented in table 4.

$$\begin{bmatrix} \partial\Delta\dot{u}_{obl}/\partial h & \partial\Delta\dot{w}_{obl}/\partial h \\ \partial\Delta\dot{u}_{obl}/\partial\varphi & \partial\Delta\dot{w}_{obl}/\partial\varphi \end{bmatrix} = -\frac{\mu J}{r^4}\begin{bmatrix} -\dfrac{4\sin 2\varphi}{r} & -\dfrac{4(3\cos^2\varphi - 2)}{r} \\ 2\cos 2\varphi & -6\cos\varphi\sin\varphi \end{bmatrix} \tag{166}$$

The partial derivative of the equations of motion with respect to error coefficients are

$$\frac{\partial}{\partial C_i}\begin{bmatrix} \dot{u} \\ \dot{v} \\ \dot{w} \end{bmatrix} = G^T \frac{\partial}{\partial C_i}\begin{bmatrix} a_{XB} \\ a_{YB} \\ a_{ZB} \end{bmatrix} \tag{167}$$

$$\frac{\partial}{\partial C_i}\begin{bmatrix} \dot{h} \\ \dot{\varphi} \\ \dot{\theta} \end{bmatrix} = \begin{bmatrix} 0 \\ 0 \\ 0 \end{bmatrix} \tag{168}$$

$$\frac{\partial}{\partial C_i}\begin{bmatrix} e_0 \\ e_1 \\ e_2 \\ e_3 \end{bmatrix} = \frac{1}{2}\begin{bmatrix} -e_1 & -e_2 & -e_3 \\ e_0 & -e_3 & e_2 \\ e_3 & e_0 & -e_1 \\ -e_2 & e_1 & e_0 \end{bmatrix}\frac{\partial}{\partial C_i}\begin{bmatrix} P \\ Q \\ R \end{bmatrix} \tag{169}$$

For the center of gravity parameters C_{31}, C_{32}, and C_{33}

$$\begin{bmatrix} \partial a_{XB}/\partial C_{31} & \partial a_{YB}/\partial C_{31} & \partial a_{ZB}/\partial C_{31} \\ \partial a_{XB}/\partial C_{32} & \partial a_{YB}/\partial C_{32} & \partial a_{ZB}/\partial C_{32} \\ \partial a_{XB}/\partial C_{33} & \partial a_{YB}/\partial C_{33} & \partial a_{ZB}/\partial C_{33} \end{bmatrix} = -\begin{bmatrix} -(Q^2 + R^2) & (PQ + \dot{R}) & (PR - \dot{Q}) \\ (PQ + \dot{R}) & -(P^2 + R^2) & (QR + \dot{P}) \\ (PR + \dot{Q}) & (QR - \dot{P}) & -(P^2 + Q^2) \end{bmatrix} \tag{170}$$

and

$$\frac{\partial}{\partial C_i}\begin{bmatrix} P \\ Q \\ R \end{bmatrix} = \begin{bmatrix} 0 \\ 0 \\ 0 \end{bmatrix} \tag{171}$$

TABLE 4.- COEFFICIENTS IN STEP2 LINEAR EQUATIONS OF MOTION ($\partial\dot{X}/\partial X$)

$\dot{X}$ \ X	u	v	w	h	φ	θ
$\dot{u}$	$\frac{w}{r}$	$-\frac{2v \tan\varphi}{r}$	$\frac{u}{r}$	$\frac{(v^2 \tan\varphi - uw)}{r^2} + \frac{\partial\Delta\dot{u}_{OBL}}{\partial h}$	$-\frac{v^2}{r \cos^2\varphi} + \frac{\partial\Delta\dot{u}_{OBL}}{\partial\varphi}$	0
$\dot{v}$	$\frac{v \tan\varphi}{r}$	$\frac{u \tan\varphi + w}{r}$	$\frac{v}{r}$	$-\frac{(vw + uv \tan\varphi)}{r^2}$	$\frac{uv}{r \cos^2\varphi}$	0
$\dot{w}$	$-\frac{2u}{r}$	$-\frac{2v}{r}$	0	$\frac{(u^2 + v^2)}{r^2} - \frac{2\mu}{r^3} + \frac{\partial\Delta\dot{w}_{OBL}}{\partial h}$	$\frac{\partial\Delta\dot{w}_{OBL}}{\partial\varphi}$	0
$\dot{h}$	0	0	-1	0	0	0
$\dot{\varphi}$	$\frac{1}{r}$	0	0	$-\frac{u}{r^2}$	0	0
$\dot{\theta}$	0	$\frac{1}{r \cos\varphi}$	0	$-\frac{v}{r^2 \cos\varphi}$	$\frac{v \tan\varphi}{r \cos\varphi}$	0
$\dot{e}_0$	$-\frac{e_2}{2r}$	$\frac{e_1 - e_3 \tan\varphi}{2r}$	0	$\frac{(-e_1 v + e_2 u + e_3 v \tan\varphi)}{2r^2}$	$\frac{-e_3 v}{2r \cos^2\varphi}$	0
$\dot{e}_1$	$\frac{e_3}{2r}$	$\frac{-e_0 - e_2 \tan\varphi}{2r}$	0	$\frac{(e_0 v - e_3 u + e_2 v \tan\varphi)}{2r^2}$	$\frac{-e_2 v}{2r \cos^2\varphi}$	0
$\dot{e}_2$	$\frac{e_0}{2r}$	$\frac{e_3 + e_1 \tan\varphi}{2r}$	0	$\frac{(-e_3 v - e_0 u - e_1 v \tan\varphi)}{2r^2}$	$\frac{e_1 v}{2r \cos^2\varphi}$	0
$\dot{e}_3$	$-\frac{e_1}{2r}$	$\frac{-e_2 + e_0 \tan\varphi}{2r}$	0	$\frac{(e_2 v + e_1 u - e_0 v \tan\varphi)}{2r^2}$	$\frac{e_0 v}{2r \cos^2\varphi}$	0

e_0	e_1	e_2	e_3
$2(e_0 a_{XB} - e_3 a_{YB} + e_2 a_{ZB})$	$2(e_1 a_{XB} + e_2 a_{YB} + e_3 a_{ZB})$	$2(-e_2 a_{XB} + e_1 a_{YB} + e_0 a_{ZB})$	$2(-e_3 a_{XB} - e_0 a_{YB} + e_1 a_{ZB})$
$2(e_3 a_{XB} + e_0 a_{YB} - e_1 a_{ZB})$	$2(e_2 a_{XB} - e_1 a_{YB} - e_0 a_{ZB})$	$2(e_1 a_{XB} + e_2 a_{YB} + e_3 a_{ZB})$	$2(e_0 a_{XB} - e_3 a_{YB} + e_2 a_{ZB})$
$2(-e_2 a_{XB} + e_1 a_{YB} + e_0 a_{ZB})$	$2(e_3 a_{XB} + e_0 a_{YB} - e_1 a_{ZB})$	$2(-e_0 a_{XB} + e_3 a_{YB} - e_2 a_{ZB})$	$2(e_1 a_{XB} + e_2 a_{YB} + e_3 a_{ZB})$
0	0	0	0
0	0	0	0
0	0	0	0
0	$-\frac{1}{2}\left(P - \frac{v}{r}\right)$	$-\frac{1}{2}\left(Q + \frac{u}{r}\right)$	$-\frac{1}{2}\left(R + \frac{v \tan\varphi}{r}\right)$
$\frac{1}{2}\left(P - \frac{v}{r}\right)$	0	$\frac{1}{2}\left(R - \frac{v \tan\varphi}{r}\right)$	$-\frac{1}{2}\left(Q - \frac{u}{r}\right)$
$\frac{1}{2}\left(Q + \frac{u}{r}\right)$	$-\frac{1}{2}\left(R - \frac{v \tan\varphi}{r}\right)$	0	$\frac{1}{2}\left(P + \frac{v}{r}\right)$
$\frac{1}{2}\left(R + \frac{v \tan\varphi}{r}\right)$	$\frac{1}{2}\left(Q - \frac{u}{r}\right)$	$-\frac{1}{2}\left(P + \frac{v}{r}\right)$	0

For the inertial angular rate parameters, C_{36}, C_{37}, . . ., C_{60}

$$\frac{\partial}{\partial C_i}\begin{bmatrix} a_{XB} \\ a_{YB} \\ a_{ZB} \end{bmatrix} = -\begin{bmatrix} (Qy_p + Rz_p) & (Py_p - 2Qx_p) & (Pz_p - 2Rx_p) \\ (Qx_p - 2Py_p) & (Px_p + Rz_p) & (Qz_p - 2Ry_p) \\ (Rx_p - 2Pz_p) & (Ry_p - 2Qz_p) & (Qy_p + Px_p) \end{bmatrix}\frac{\partial}{\partial C_i}\begin{bmatrix} P \\ Q \\ R \end{bmatrix}$$

$$+\begin{bmatrix} 0 & -z_p & y_p \\ z_p & 0 & -x_p \\ -y_p & x_p & 0 \end{bmatrix}\frac{\partial}{\partial C_i}\begin{bmatrix} \dot{P} \\ \dot{Q} \\ \dot{R} \end{bmatrix} \tag{172}$$

where

$$\begin{bmatrix} \partial P/\partial C_{36} & \partial Q/\partial C_{36} & \partial R/\partial C_{36} \\ \partial P/\partial C_{37} & \cdots & \\ \partial P/\partial C_{38} & \cdots & \\ \partial P/\partial C_{39} & \cdots & \\ \partial P/\partial C_{40} & \cdots & \\ \partial P/\partial C_{41} & \cdots & \\ \partial P/\partial C_{42} & \cdots & \\ \partial P/\partial C_{43} & \cdots & \\ \partial P/\partial C_{44} & \cdots & \\ \partial P/\partial C_{45} & \cdots & \\ \partial P/\partial C_{46} & \cdots & \\ \partial P/\partial C_{47} & \cdots & \\ \partial P/\partial C_{48} & \cdots & \\ \partial P/\partial C_{49} & \cdots & \\ \partial P/\partial C_{50} & \cdots & \\ \partial P/\partial C_{51} & \cdots & \\ \partial P/\partial C_{52} & \cdots & \\ \partial P/\partial C_{53} & \cdots & \\ \partial P/\partial C_{54} & \cdots & \\ \partial P/\partial C_{55} & \cdots & \\ \partial P/\partial C_{56} & \cdots & \\ \partial P/\partial C_{57} & \cdots & \\ \partial P/\partial C_{58} & \cdots & \\ \partial P/\partial C_{59} & \cdots & \\ \partial P/\partial C_{60} & \cdots & \end{bmatrix} = \begin{bmatrix} P_M & 0 & 0 \\ Q_M & 0 & 0 \\ R_M & 0 & 0 \\ 0 & P_M & 0 \\ 0 & Q_M & 0 \\ 0 & R_M & 0 \\ 0 & 0 & P_M \\ 0 & 0 & Q_M \\ 0 & 0 & R_M \\ 1 & 0 & 0 \\ 0 & 1 & 0 \\ 0 & 0 & 1 \\ a_{XP} & 0 & 0 \\ 0 & a_{XP} & 0 \\ 0 & 0 & a_{XP} \\ a_{YP} & 0 & 0 \\ 0 & a_{YP} & 0 \\ 0 & 0 & a_{YP} \\ a_{ZP} & 0 & 0 \\ 0 & a_{ZP} & 0 \\ 0 & 0 & a_{ZP} \\ \bar{a}_P & 0 & 0 \\ 0 & 0 & 0 \\ 0 & 0 & 0 \\ 0 & 0 & 0 \end{bmatrix} \tag{173}$$

$$
\begin{bmatrix}
\partial\dot{P}/\partial C_{36} & \partial\dot{Q}/\partial C_{36} & \partial\dot{R}/\partial C_{36} \\
\partial\dot{P}/\partial C_{37} & \cdots & \\
\partial\dot{P}/\partial C_{38} & \cdots & \\
\partial\dot{P}/\partial C_{39} & \cdots & \\
\partial\dot{P}/\partial C_{40} & \cdots & \\
\partial\dot{P}/\partial C_{41} & \cdots & \\
\partial\dot{P}/\partial C_{42} & \cdots & \\
\partial\dot{P}/\partial C_{43} & \cdots & \\
\partial\dot{P}/\partial C_{44} & \cdots &
\end{bmatrix}
=
\begin{bmatrix}
\dot{P}_M & 0 & 0 \\
\dot{Q}_M & 0 & 0 \\
\dot{R}_M & 0 & 0 \\
0 & \dot{P}_M & 0 \\
0 & \dot{Q}_M & 0 \\
0 & \dot{R}_M & 0 \\
0 & 0 & \dot{P}_M \\
0 & 0 & \dot{Q}_M \\
0 & 0 & \dot{R}_M
\end{bmatrix}
\tag{174}
$$

For the acceleration parameters C_{61}, C_{62}, . . . C_{75}

$$
\begin{aligned}
\frac{\partial}{\partial C_i}\begin{bmatrix} a_{XP} \\ a_{YP} \\ a_{ZP} \end{bmatrix} &= \frac{\partial}{\partial C_i}\begin{bmatrix} a_{XP} \\ a_{YP} \\ a_{ZP} \end{bmatrix} \\
&- \begin{bmatrix}
\left(Qy_p + Rz_p\right) & \left(Py_p - 2Qx_p\right) & \left(Pz_p - 2Rx_p\right) \\
\left(Qx_p - 2Py_p\right) & \left(Px_p + Rz_p\right) & \left(Qz_p - 2Ry_p\right) \\
\left(Rx_p - 2Pz_p\right) & \left(Ry_p - 2Qz_p\right) & \left(Qy_p + Px_p\right)
\end{bmatrix} \frac{\partial}{\partial C_i}\begin{bmatrix} P \\ Q \\ R \end{bmatrix} \\
&+ \begin{bmatrix} 0 & -z_p & y_p \\ z_p & 0 & -x_p \\ -y_p & x_p & 0 \end{bmatrix} \frac{\partial}{\partial C_i}\begin{bmatrix} \dot{P} \\ \dot{Q} \\ \dot{R} \end{bmatrix}
\end{aligned}
\tag{175}
$$

where

$$\begin{bmatrix} \partial a_{XP}/\partial C_{61} & \partial a_{YP}/\partial C_{61} & \partial a_{ZP}/\partial C_{61} \\ \partial a_{XP}/\partial C_{62} & \cdots & \\ \partial a_{XP}/\partial C_{63} & \cdots & \\ \partial a_{XP}/\partial C_{64} & \cdots & \\ \partial a_{XP}/\partial C_{65} & \cdots & \\ \partial a_{XP}/\partial C_{66} & \cdots & \\ \partial a_{XP}/\partial C_{67} & \cdots & \\ \partial a_{XP}/\partial C_{68} & \cdots & \\ \partial a_{XP}/\partial C_{69} & \cdots & \\ \partial a_{XP}/\partial C_{70} & \cdots & \\ \partial a_{XP}/\partial C_{71} & \cdots & \\ \partial a_{XP}/\partial C_{72} & \cdots & \\ \partial a_{XP}/\partial C_{73} & \cdots & \\ \partial a_{XP}/\partial C_{74} & \cdots & \\ \partial a_{XP}/\partial C_{75} & \cdots & \end{bmatrix} = \begin{bmatrix} a_{XM} & 0 & 0 \\ a_{YM} & 0 & 0 \\ a_{ZM} & 0 & 0 \\ 0 & a_{XM} & 0 \\ 0 & a_{YM} & 0 \\ 0 & a_{ZM} & 0 \\ 0 & 0 & a_{XM} \\ 0 & 0 & a_{YM} \\ 0 & 0 & a_{ZM} \\ 1 & 0 & 0 \\ 0 & 1 & 0 \\ 0 & 0 & 1 \\ 0 & 0 & 0 \\ 0 & 0 & 0 \\ 0 & 0 & 0 \end{bmatrix} \tag{176}$$

$$\frac{\partial}{\partial C_i}\begin{bmatrix} P \\ Q \\ R \end{bmatrix} = \begin{bmatrix} C_{48} & C_{51} & C_{54} & C_{57} \\ C_{49} & C_{52} & C_{55} & C_{58} \\ C_{50} & C_{53} & C_{56} & C_{59} \end{bmatrix} \frac{\partial}{\partial C_i}\begin{bmatrix} a_{XP} \\ a_{YP} \\ a_{ZP} \\ \bar{a}_P \end{bmatrix} \tag{177}$$

$$\frac{\partial \bar{a}_P}{\partial C_i} = \bar{a}_P \left\{ \left[\frac{1}{a_{XP}} - \frac{a_{XP}}{\left(a_{XP}^2 + a_{ZP}^2\right)} \right] \frac{\partial a_{XP}}{\partial C_i} + \left[\frac{1}{a_{ZP}} - \frac{a_{ZP}}{a_{XP}^2 + a_{ZP}^2} \right] \frac{\partial a_{ZP}}{\partial C_i} \right\} \tag{178}$$

and

$$\frac{\partial}{\partial C_i}\begin{bmatrix}\dot{P}\\ \dot{Q}\\ \dot{R}\end{bmatrix} = \begin{bmatrix} C_{48} & C_{51} & C_{54} & C_{57}\\ C_{49} & C_{52} & C_{55} & 0\\ C_{50} & C_{53} & C_{56} & 0\end{bmatrix}\frac{\partial}{\partial C_i}\begin{bmatrix}\dot{a}_{XP}\\ \dot{a}_{YP}\\ \dot{a}_{ZP}\\ \dot{\bar{a}}_P\end{bmatrix} \tag{179}$$

with

$$\begin{bmatrix} \partial\dot{a}_{XP}/\partial C_{61} & \partial\dot{a}_{YP}/\partial C_{61} & \partial\dot{a}_{ZP}/\partial C_{61}\\ \partial\dot{a}_{XP}/\partial C_{62} & \cdots & \\ \partial\dot{a}_{XP}/\partial C_{63} & \cdots & \\ \partial\dot{a}_{XP}/\partial C_{64} & \cdots & \\ \partial\dot{a}_{XP}/\partial C_{65} & \cdots & \\ \partial\dot{a}_{XP}/\partial C_{66} & \cdots & \\ \partial\dot{a}_{XP}/\partial C_{67} & \cdots & \\ \partial\dot{a}_{XP}/\partial C_{68} & \cdots & \\ \partial\dot{a}_{XP}/\partial C_{69} & \cdots & \end{bmatrix} = \begin{bmatrix} \dot{a}_{XM} & 0 & 0\\ \dot{a}_{YM} & 0 & 0\\ \dot{a}_{ZM} & 0 & 0\\ 0 & \dot{a}_{XM} & 0\\ 0 & \dot{a}_{YM} & 0\\ 0 & \dot{a}_{ZM} & 0\\ 0 & 0 & \dot{a}_{XM}\\ 0 & 0 & \dot{a}_{YM}\\ 0 & 0 & \dot{a}_{ZM}\end{bmatrix} \tag{180}$$

$$\begin{aligned}\frac{\partial\dot{\bar{a}}_P}{\partial C_i} = {} & \frac{2\left(a_{XP}\frac{\partial a_{XP}}{\partial C_i} + a_{ZP}\frac{\partial a_{XP}}{\partial C_i} + \dot{a}_{ZP}\frac{\partial a_{XP}}{\partial C_i} + \dot{a}_{XP}\frac{\partial a_{ZP}}{\partial C_i}\right)}{\sqrt{a_{XP}^2 + a_{ZP}^2}}\\ & - \frac{2\left(a_{XP}\dot{a}_{ZP} + a_{ZP}\dot{a}_{XP}\right)\left(a_{XP}\frac{\partial a_{XP}}{\partial C_i} + a_{ZP}\frac{\partial a_{ZP}}{\partial C_i}\right)}{\left(a_{XP}^2 + a_{ZP}^2\right)^{3/2}}\\ & - \frac{\bar{a}_P\left(a_{XP}\frac{\partial\dot{a}_{XP}}{\partial C_i} + a_{ZP}\frac{\partial a_{ZP}}{\partial C_i} + \dot{a}_{XP}\frac{\partial a_{XP}}{\partial C_i} + \dot{a}_{ZP}\frac{\partial a_{ZP}}{\partial C_i}\right)}{\left(a_{XP}^2 + a_{ZP}^2\right)}\\ & + \frac{\left(a_{XP}\dot{a}_{XP} + a_{ZP}\dot{a}_{ZP}\right)\frac{\partial\bar{a}_P}{\partial C_i}}{\left(a_{XP}^2 + a_{ZP}^2\right)}\\ & + \frac{2\bar{a}_P\left(a_{XP}\dot{a}_{XP} + a_{ZP}\dot{a}_{ZP}\right)\left(a_{XP}\frac{\partial a_{XP}}{\partial C_i} + a_{ZP}\frac{\partial a_{ZP}}{\partial C_i}\right)}{\left(a_{XP}^2 + a_{ZP}^2\right)^2}\end{aligned} \tag{181}$$

B. STEP1 Linear Equation Coefficients

The partial derivatives of the STEP1 equations of motion with respect to the 10 state variables are the same as those for STEP2 presented in table 4 with the addition of the terms in table 5.

The partial derivatives of a_{XG}, a_{YG}, and a_{ZG} are obtained differentiating equations (132) yielding

$$\frac{\partial}{\partial \zeta}\begin{bmatrix} a_{XG} \\ a_{YG} \\ a_{ZG} \end{bmatrix} = \frac{\partial}{\partial \zeta}[G]^T \begin{bmatrix} a_{XB} \\ a_{YB} \\ a_{ZB} \end{bmatrix} + [G]^T \frac{\partial}{\partial \zeta}\begin{bmatrix} a_{XB} \\ a_{YB} \\ a_{ZB} \end{bmatrix} \tag{182}$$

$$\zeta = u,\ v,\ w,\ h,\ \varphi,\ \theta,\ e_0,\ e_1,\ e_2,\ e_3$$

Expanding terms in equation (182) yields the following nonvanishing terms:

$$\frac{\partial[G]^T}{\partial e_0} = 2\begin{bmatrix} e_0 & -e_3 & e_2 \\ e_3 & e_0 & -e_1 \\ -e_2 & e_1 & e_0 \end{bmatrix} \qquad \frac{\partial[G]^T}{\partial e_1} = 2\begin{bmatrix} e_1 & e_2 & e_3 \\ e_2 & -e_1 & -e_0 \\ e_3 & e_0 & -e_1 \end{bmatrix}$$

$$\frac{\partial[G]^T}{\partial e_2} = 2\begin{bmatrix} -e_2 & e_1 & e_0 \\ e_1 & e_2 & e_3 \\ -e_0 & e_3 & -e_2 \end{bmatrix} \qquad \frac{\partial[G]^T}{\partial e_3} = 2\begin{bmatrix} -e_3 & -e_0 & e_1 \\ e_0 & -e_3 & e_2 \\ e_1 & e_2 & e_3 \end{bmatrix} \tag{183}$$

$$\frac{\partial}{\partial \zeta}\begin{bmatrix} a_{XB} \\ a_{YB} \\ a_{ZB} \end{bmatrix} = \frac{1}{q}\frac{\partial q}{\partial \zeta}\begin{bmatrix} a_{XB} \\ a_{YB} \\ a_{ZB} \end{bmatrix} + \frac{qS}{m}\frac{\partial}{\partial \zeta}\begin{bmatrix} -C_A \\ C_Y \\ -C_N \end{bmatrix} \tag{184}$$

$$\frac{\partial q}{\partial \zeta} = \frac{q}{\rho}\frac{d\rho}{dh_0}\frac{\partial h_0}{\partial \zeta} + \frac{2q}{V_A}\frac{\partial V_A}{\partial \zeta} \tag{185}$$

$$\frac{\partial}{\partial \zeta}\begin{bmatrix} -C_A \\ C_Y \\ -C_N \end{bmatrix} = \frac{\partial}{\partial V_A}\begin{bmatrix} -C_A \\ C_Y \\ -C_N \end{bmatrix}\frac{\partial V_A}{\partial \zeta} + \frac{\partial}{\partial h_0}\begin{bmatrix} -C_A \\ C_Y \\ -C_N \end{bmatrix}\frac{\partial h_0}{\partial \zeta} + \frac{\partial}{\partial \alpha}\begin{bmatrix} -C_A \\ C_Y \\ -C_N \end{bmatrix}\frac{\partial \alpha}{\partial \zeta} + \frac{\partial}{\partial \beta}\begin{bmatrix} -C_A \\ C_Y \\ -C_N \end{bmatrix}\frac{\partial \beta}{\partial \zeta} \tag{186}$$

TABLE 5.- COEFFICIENTS IN STEP1 LINEAR EQUATIONS OF MOTION ($\partial\dot{X}/\partial X$)

$\dot{X}$ \ X	u	v	w	h	φ
$\dot{u}$	$\frac{\partial a_{XG}}{\partial u}$	$\frac{\partial a_{XG}}{\partial v}$	$\frac{\partial a_{XG}}{\partial w}$	$\frac{\partial a_{XG}}{\partial h}$	$\frac{\partial a_{XG}}{\partial \varphi}$
$\dot{v}$	$\frac{\partial a_{YG}}{\partial u}$	$\frac{\partial a_{YG}}{\partial v}$	$\frac{\partial a_{YG}}{\partial w}$	$\frac{\partial a_{YG}}{\partial h}$	$\frac{\partial a_{YG}}{\partial \varphi}$
$\dot{w}$	$\frac{\partial a_{ZG}}{\partial u}$	$\frac{\partial a_{ZG}}{\partial v}$	$\frac{\partial a_{ZG}}{\partial w}$	$\frac{\partial a_{ZG}}{\partial h}$	$\frac{\partial a_{ZG}}{\partial \varphi}$
$\dot{h}$	0	0	0	0	0
$\dot{\phi}$	0	0	0	0	0
$\dot{\theta}$	0	0	0	0	0
$\dot{e}_0$	$\frac{1}{2}\left(-e_1\frac{\partial P}{\partial u} - e_2\frac{\partial Q}{\partial u} - e_3\frac{\partial R}{\partial u}\right)$	$\frac{1}{2}\left(-e_1\frac{\partial P}{\partial v} - e_2\frac{\partial Q}{\partial v} - e_3\frac{\partial R}{\partial v}\right)$	$\frac{1}{2}\left(-e_1\frac{\partial P}{\partial w} - e_2\frac{\partial Q}{\partial w} - e_3\frac{\partial R}{\partial w}\right)$	$\frac{1}{2}\left(-e_1\frac{\partial P}{\partial h} - e_2\frac{\partial Q}{\partial h} - e_3\frac{\partial R}{\partial h}\right)$	$\frac{1}{2}\left(-e_1\frac{\partial P}{\partial \varphi} - e_2\frac{\partial Q}{\partial \varphi} - e_3\frac{\partial R}{\partial \varphi}\right)$
$\dot{e}_1$	$\frac{1}{2}\left(e_0\frac{\partial P}{\partial u} - e_3\frac{\partial Q}{\partial u} + e_2\frac{\partial R}{\partial u}\right)$	$\frac{1}{2}\left(e_0\frac{\partial P}{\partial v} - e_3\frac{\partial Q}{\partial v} + e_2\frac{\partial R}{\partial v}\right)$	$\frac{1}{2}\left(e_0\frac{\partial P}{\partial w} - e_3\frac{\partial Q}{\partial w} + e_2\frac{\partial R}{\partial w}\right)$	$\frac{1}{2}\left(e_0\frac{\partial P}{\partial h} - e_3\frac{\partial Q}{\partial h} + e_2\frac{\partial R}{\partial h}\right)$	$\frac{1}{2}\left(e_0\frac{\partial P}{\partial \varphi} - e_3\frac{\partial Q}{\partial \varphi} + e_2\frac{\partial R}{\partial \varphi}\right)$
$\dot{e}_2$	$\frac{1}{2}\left(e_3\frac{\partial P}{\partial u} + e_0\frac{\partial Q}{\partial u} - e_1\frac{\partial R}{\partial u}\right)$	$\frac{1}{2}\left(e_3\frac{\partial P}{\partial v} + e_0\frac{\partial Q}{\partial v} - e_1\frac{\partial R}{\partial v}\right)$	$\frac{1}{2}\left(e_3\frac{\partial P}{\partial w} + e_0\frac{\partial Q}{\partial w} - e_1\frac{\partial R}{\partial w}\right)$	$\frac{1}{2}\left(e_3\frac{\partial P}{\partial h} + e_0\frac{\partial Q}{\partial h} - e_1\frac{\partial R}{\partial h}\right)$	$\frac{1}{2}\left(e_3\frac{\partial P}{\partial \varphi} + e_0\frac{\partial Q}{\partial \varphi} - e_1\frac{\partial R}{\partial \varphi}\right)$
$\dot{e}_3$	$\frac{1}{2}\left(-e_2\frac{\partial P}{\partial u} + e_1\frac{\partial Q}{\partial u} + e_0\frac{\partial R}{\partial u}\right)$	$\frac{1}{2}\left(-e_2\frac{\partial P}{\partial v} + e_1\frac{\partial Q}{\partial v} + e_0\frac{\partial R}{\partial v}\right)$	$\frac{1}{2}\left(-e_2\frac{\partial P}{\partial w} + e_1\frac{\partial Q}{\partial w} + e_0\frac{\partial R}{\partial w}\right)$	$\frac{1}{2}\left(-e_2\frac{\partial P}{\partial h} + e_1\frac{\partial Q}{\partial h} + e_0\frac{\partial R}{\partial h}\right)$	$\frac{1}{2}\left(-e_2\frac{\partial P}{\partial \varphi} + e_1\frac{\partial Q}{\partial \varphi} + e_0\frac{\partial R}{\partial \varphi}\right)$

TABLE 5.- COEFFICIENTS IN STEP1 LINEAR EQUATIONS OF MOTION ($\partial\dot{X}/\partial X$) - Concluded

$\dot{X}$ \ X	θ	e_0	e_1	e_2	e_3
$\dot{u}$	0	$g_{11}\frac{\partial a_{XB}}{\partial e_0} + g_{21}\frac{\partial a_{YB}}{\partial e_0} + g_{31}\frac{\partial a_{ZB}}{\partial e_0}$	$g_{11}\frac{\partial a_{XB}}{\partial e_1} + g_{21}\frac{\partial a_{YB}}{\partial e_1} + g_{31}\frac{\partial a_{ZB}}{\partial e_1}$	$g_{11}\frac{\partial a_{XB}}{\partial e_2} + g_{21}\frac{\partial a_{YB}}{\partial e_2} + g_{31}\frac{\partial a_{ZB}}{\partial e_2}$	$g_{11}\frac{\partial a_{XB}}{\partial e_3} + g_{21}\frac{\partial a_{YB}}{\partial e_3} + g_{31}\frac{\partial a_{ZB}}{\partial e_3}$
$\dot{v}$	0	$g_{12}\frac{\partial a_{XB}}{\partial e_0} + g_{22}\frac{\partial a_{YB}}{\partial e_0} + g_{32}\frac{\partial a_{ZB}}{\partial e_0}$	$g_{12}\frac{\partial a_{XB}}{\partial e_1} + g_{22}\frac{\partial a_{YB}}{\partial e_1} + g_{32}\frac{\partial a_{ZB}}{\partial e_1}$	$g_{12}\frac{\partial a_{XB}}{\partial e_2} + g_{22}\frac{\partial a_{YB}}{\partial e_2} + g_{32}\frac{\partial a_{ZB}}{\partial e_2}$	$g_{12}\frac{\partial a_{XB}}{\partial e_3} + g_{22}\frac{\partial a_{YB}}{\partial e_3} + g_{32}\frac{\partial a_{ZB}}{\partial e_3}$
$\dot{w}$	0	$g_{13}\frac{\partial a_{XB}}{\partial e_0} + g_{22}\frac{\partial a_{YB}}{\partial e_0} + g_{33}\frac{\partial a_{ZB}}{\partial e_0}$	$g_{13}\frac{\partial a_{XB}}{\partial e_1} + g_{23}\frac{\partial a_{YB}}{\partial e_1} + g_{33}\frac{\partial a_{ZB}}{\partial e_1}$	$g_{13}\frac{\partial a_{XB}}{\partial e_2} + g_{23}\frac{\partial a_{YB}}{\partial e_2} + g_{33}\frac{\partial a_{ZB}}{\partial e_2}$	$g_{13}\frac{\partial a_{XB}}{\partial e_3} + g_{23}\frac{\partial a_{YB}}{\partial e_3} + g_{33}\frac{\partial a_{ZB}}{\partial e_3}$
$\dot{h}$	0	0	0	0	0
$\dot{\varphi}$	0	0	0	0	0
$\dot{\theta}$	0	0	0	0	0
$\dot{e}_0$	0	$\frac{1}{2}\left(-e_1\frac{\partial P}{\partial e_0} - e_2\frac{\partial Q}{\partial e_0} - e_3\frac{\partial R}{\partial e_0}\right)$	$\frac{1}{2}\left(-e_1\frac{\partial P}{\partial e_1} - e_2\frac{\partial Q}{\partial e_1} - e_3\frac{\partial R}{\partial e_1}\right)$	$\frac{1}{2}\left(-e_1\frac{\partial P}{\partial e_2} - e_2\frac{\partial Q}{\partial e_2} - e_3\frac{\partial R}{\partial e_2}\right)$	$\frac{1}{2}\left(-e_1\frac{\partial P}{\partial e_3} - e_2\frac{\partial Q}{\partial e_3} - e_3\frac{\partial R}{\partial e_3}\right)$
$\dot{e}_1$	0	$\frac{1}{2}\left(e_0\frac{\partial P}{\partial e_0} - e_3\frac{\partial Q}{\partial e_0} + e_2\frac{\partial R}{\partial e_0}\right)$	$\frac{1}{2}\left(e_0\frac{\partial P}{\partial e_1} - e_3\frac{\partial Q}{\partial e_1} + e_2\frac{\partial R}{\partial e_1}\right)$	$\frac{1}{2}\left(e_0\frac{\partial P}{\partial e_2} - e_3\frac{\partial Q}{\partial e_2} + e_2\frac{\partial R}{\partial e_2}\right)$	$\frac{1}{2}\left(e_0\frac{\partial P}{\partial e_3} - e_3\frac{\partial Q}{\partial e_3} + e_2\frac{\partial R}{\partial e_3}\right)$
$\dot{e}_2$	0	$\frac{1}{2}\left(e_3\frac{\partial P}{\partial e_0} + e_0\frac{\partial Q}{\partial e_0} - e_1\frac{\partial R}{\partial e_0}\right)$	$\frac{1}{2}\left(e_3\frac{\partial P}{\partial e_1} + e_0\frac{\partial Q}{\partial e_1} - e_1\frac{\partial R}{\partial e_1}\right)$	$\frac{1}{2}\left(e_3\frac{\partial P}{\partial e_2} + e_0\frac{\partial Q}{\partial e_2} - e_1\frac{\partial R}{\partial e_2}\right)$	$\frac{1}{2}\left(e_3\frac{\partial P}{\partial e_3} + e_0\frac{\partial Q}{\partial e_3} - e_1\frac{\partial R}{\partial e_3}\right)$
$\dot{e}_3$	0	$\frac{1}{2}\left(-e_2\frac{\partial P}{\partial e_0} + e_1\frac{\partial Q}{\partial e_0} + e_0\frac{\partial R}{\partial e_0}\right)$	$\frac{1}{2}\left(-e_2\frac{\partial P}{\partial e_1} + e_1\frac{\partial Q}{\partial e_1} + e_0\frac{\partial R}{\partial e_1}\right)$	$\frac{1}{2}\left(-e_2\frac{\partial P}{\partial e_2} + e_1\frac{\partial Q}{\partial e_2} + e_0\frac{\partial R}{\partial e_2}\right)$	$\frac{1}{2}\left(-e_2\frac{\partial P}{\partial e_3} + e_1\frac{\partial Q}{\partial e_3} + e_0\frac{\partial R}{\partial e_3}\right)$

The partials of V_A, h_0, α, and β are presented in Section VI. The partial derivatives of C_A, C_Y, and C_N are calculated numerically by forming the ratio of responses in C_A, C_Y, and C_N, with the perturbations in V_A, h_0, α, and β that caused them. When the aerodynamic coefficients C_L, C_Y, C_D or C_A, C_{Y_η}, C_{N_η} are specified they are transformed to C_A, C_Y, C_N via equations (134). Although C_A, C_{Y_η}, C_{N_η} may be specified, α and β perturbation are used to form the partial derivatives. The angles η and ξ are calculated from α and β as follows:

$$\sin\eta = \sqrt{\cos^2\beta\sin^2\alpha + \sin^2\beta} \qquad \cos\eta = \cos\beta\cos\alpha$$

$$\sin\xi = \frac{\sin\beta}{\sin\eta} \qquad \cos\xi = \frac{\cos\beta\sin\alpha}{\sin\eta} \tag{187}$$

The partial derivatives of P, Q, and R with respect to the state variables are

$$\frac{\partial}{\partial\zeta}\begin{bmatrix} P \\ Q \\ R \end{bmatrix} = \begin{bmatrix} C_{48} & C_{51} & C_{54} & C_{57} \\ C_{49} & C_{52} & C_{55} & 0 \\ C_{50} & C_{53} & C_{56} & 0 \end{bmatrix} \frac{\partial}{\partial\zeta}\begin{bmatrix} a_{XP} \\ a_{YP} \\ a_{ZP} \\ \bar{a}_P \end{bmatrix} \tag{188}$$

where

$$\frac{\partial}{\partial\zeta}\begin{bmatrix} a_{XP} \\ a_{YP} \\ a_{ZP} \end{bmatrix} = \begin{bmatrix} (Qy_p + Rz_p) & (Py_p - 2Qx_p) & (Pz_p - 2Rx_p) \\ (Qx_p - 2Py_p) & (Px_p + Rz_p) & (Qz_p - 2Ry_p) \\ (Rx_p - 2Pz_p) & (Ry_p - 2Qz_p) & (Qy_p + Px_p) \end{bmatrix} \frac{\partial}{\partial\zeta}\begin{bmatrix} P \\ Q \\ R \end{bmatrix} + \frac{\partial}{\partial\zeta}\begin{bmatrix} a_{XB} \\ a_{YB} \\ a_{ZB} \end{bmatrix} \tag{189}$$

and

$$\frac{\partial\bar{a}_P}{\partial\zeta} = \bar{a}_P\left\{\left[\frac{1}{a_{XP}} - \frac{a_{XP}}{\left(a_{XP}^2 + a_{ZP}^2\right)}\right]\frac{\partial a_{XP}}{\partial\zeta} + \left[\frac{1}{a_{ZP}} - \frac{a_{ZP}}{\left(a_{XP}^2 + a_{ZP}^2\right)}\right]\frac{\partial a_{ZP}}{\partial\zeta}\right\} \tag{190}$$

The partial derivatives of the equations of motion with respect to the error coefficients on the aerodynamic coefficients, mass, atmospheric density and winds, C_1 thru C_{30} are:

$$\frac{\partial}{\partial C_i}\begin{bmatrix}\dot{u}\\ \dot{v}\\ \dot{w}\end{bmatrix} = [G]^T \frac{\partial}{\partial C_i}\begin{bmatrix}a_{XB}\\ a_{YB}\\ a_{ZB}\end{bmatrix}$$

$$\frac{\partial}{\partial C_i}\begin{bmatrix}\dot{h}\\ \dot{\varphi}\\ \dot{\theta}\end{bmatrix} = \begin{bmatrix}0\\ 0\\ 0\end{bmatrix} \tag{191}$$

$$\frac{\partial}{\partial C_i}\begin{bmatrix}\dot{e}_0\\ \dot{e}_1\\ \dot{e}_2\\ \dot{e}_3\end{bmatrix} = \frac{1}{2}\begin{bmatrix}-e_1 & -e_2 & -e_3\\ e_0 & -e_3 & e_2\\ e_3 & e_0 & -e_1\\ -e_2 & e_1 & e_0\end{bmatrix}\frac{\partial}{\partial C_i}\begin{bmatrix}P\\ Q\\ R\end{bmatrix}$$

The partial derivatives of P, Q, and R are:

$$\frac{\partial}{\partial C_i}\begin{bmatrix}P\\ Q\\ R\end{bmatrix} = \begin{bmatrix}C_{48} & C_{51} & C_{54} & C_{57}\\ C_{49} & C_{52} & C_{55} & 0\\ C_{50} & C_{53} & C_{56} & 0\end{bmatrix}\frac{\partial}{\partial C_i}\begin{bmatrix}a_{XP}\\ a_{YP}\\ a_{ZP}\\ \bar{a}_P\end{bmatrix} \tag{192}$$

with acceleration partials determined from

$$\frac{\partial}{\partial C_i}\begin{bmatrix}a_{XP}\\ a_{YP}\\ a_{ZP}\end{bmatrix} = \frac{\partial}{\partial C_i}\begin{bmatrix}a_{XB}\\ a_{YB}\\ a_{ZB}\end{bmatrix} + \begin{bmatrix}(Qy_p + Rz_p) & (Py_p - 2Qx_p) & (Pz_p - 2Rx_p)\\ (Qx_p - 2Py_p) & (Px_p + Rz_p) & (Qz_p - 2Ry_p)\\ (Rx_p - 2Pz_p) & (Ry_p - 2Qz_p) & (Qy_p + Px_p)\end{bmatrix}\frac{\partial}{\partial C_i}\begin{bmatrix}P\\ Q\\ R\end{bmatrix} \tag{193}$$

$$\frac{\partial \bar{a}_P}{\partial C_i} = \bar{a}_P\left\{\left[\frac{1}{a_{XP}} - \frac{a_{XP}}{(a_{XP}^2 + a_{ZP}^2)}\right]\frac{\partial a_{XP}}{\partial C_i} + \left[\frac{1}{a_{ZP}} - \frac{a_{ZP}}{a_{XP}^2 + a_{ZP}^2}\right]\frac{\partial a_{ZP}}{\partial C_i}\right\} \tag{194}$$

Note that an iteration loop is necessary to solve equations (192) and (193). The partial derivatives of a_{XB}, a_{YB}, and a_{ZB} will now be presented for the error coefficients C_1 thru C_{30}.

For the aerodynamic coefficient error parameters C_1 thru C_{12}:

$$\begin{bmatrix} \partial a_{XB}/\partial C_1 & \partial a_{YB}/\partial C_1 & \partial a_{ZB}/\partial C_1 \\ \partial a_{XB}/\partial C_2 & \cdots & \\ \partial a_{XB}/\partial C_3 & \cdots & \\ \partial a_{XB}/\partial C_4 & \cdots & \\ \partial a_{XB}/\partial C_5 & \cdots & \\ \partial a_{XB}/\partial C_6 & \cdots & \\ \partial a_{XB}/\partial C_7 & \cdots & \\ \partial a_{XB}/\partial C_8 & \cdots & \\ \partial a_{XB}/\partial C_9 & \cdots & \\ \partial a_{XB}/\partial C_{10} & \cdots & \\ \partial a_{XB}/\partial C_{11} & \cdots & \\ \partial a_{XB}/\partial C_{12} & \cdots & \end{bmatrix} = \frac{qS}{m} \begin{bmatrix} -1 & 0 & 0 \\ 0 & 1 & 0 \\ 0 & 0 & -1 \\ -\alpha^2 \text{ or } -\eta^2 & 0 & 0 \\ 0 & \beta \text{ or } \xi & 0 \\ 0 & 0 & -\alpha \text{ or } -\eta \\ -\frac{1}{(M+1)^2} & 0 & 0 \\ 0 & \frac{1}{(M+1)^2} & 0 \\ 0 & 0 & -\frac{1}{(M+1)^2} \\ -\frac{M^{.618}}{\sqrt{Re}} & 0 & 0 \\ 0 & \frac{M^{.618}}{\sqrt{Re}} & 0 \\ 0 & 0 & -\frac{M^{.618}}{\sqrt{Re}} \end{bmatrix} T \quad (195)$$

where α and β or η and ξ are used depending on whether the aerodynamic coefficients are specified in terms of α and β or η and ξ. The transformation matrix T is:

$$T = \begin{bmatrix} 1 & 0 & 0 \\ 0 & 1 & 0 \\ 0 & 0 & 1 \end{bmatrix} \quad \text{for} \begin{bmatrix} C_A \\ C_Y \\ C_N \end{bmatrix} \text{specified} \quad (196a)$$

$$T = \begin{bmatrix} \cos\alpha & 0 & \sin\alpha \\ 0 & 1 & 0 \\ -\sin\alpha & 0 & \cos\alpha \end{bmatrix} \quad \text{for} \begin{bmatrix} C_D \\ C_Y \\ C_L \end{bmatrix} \text{specified} \tag{196b}$$

$$T = \begin{bmatrix} 1 & 0 & 0 \\ 0 & \cos\xi & -\sin\xi \\ 0 & \sin\xi & \cos\xi \end{bmatrix} \quad \text{for} \begin{bmatrix} C_A \\ C_{Y_\eta} \\ C_{N_\eta} \end{bmatrix} \text{specified} \tag{196c}$$

For the error coefficients on mass, C_{16} thru C_{18},

$$\frac{\partial}{\partial C_i} \begin{bmatrix} a_{XB} \\ a_{YB} \\ a_{ZB} \end{bmatrix} = -\frac{1}{m}\frac{\partial m}{\partial C_i} \begin{bmatrix} a_{XB} \\ a_{YB} \\ a_{ZB} \end{bmatrix} \tag{197}$$

where

$$\begin{bmatrix} \partial m/\partial C_{16} \\ \partial m/\partial C_{17} \\ \partial m/\partial C_{18} \end{bmatrix} = \begin{cases} \begin{bmatrix} 0 \\ 0 \\ 0 \end{bmatrix} & \text{for } t < t_1 \\ \begin{bmatrix} -1 \\ -\tau \\ -\tau^2 \end{bmatrix} & \text{for } t_1 \leq t \leq t_2 \\ \begin{bmatrix} -1 \\ -\tau_2 \\ -\tau_2^2 \end{bmatrix} & \text{for } t_2 < t \end{cases} \tag{198}$$

For the error coefficients on atmospheric density, C_{21}, C_{22}, and C_{23},

$$\frac{\partial}{\partial C_i} \begin{bmatrix} a_{XB} \\ a_{YB} \\ a_{ZB} \end{bmatrix} = \frac{1}{\rho}\frac{\partial \rho}{\partial C_i} \left\{ \begin{bmatrix} a_{XB} \\ a_{YB} \\ a_{ZB} \end{bmatrix} + \frac{qSR_e}{m}\frac{\partial}{\partial R_e} \begin{bmatrix} -C_A \\ C_Y \\ -C_N \end{bmatrix} \right\} \tag{199}$$

with

$$\begin{bmatrix} \partial\rho/\partial C_{21} \\ \partial\rho/\partial C_{22} \\ \partial\rho/\partial C_{23} \end{bmatrix} = \begin{bmatrix} \rho_M \\ e^{C_{23}h_0} \\ C_{22}h_0 e^{C_{23}h_0} \end{bmatrix} \tag{200}$$

For error coefficients on atmospheric winds, C_{26} and C_{27},

$$\frac{\partial}{\partial C_i}\begin{bmatrix} a_{XB} \\ a_{YB} \\ a_{ZB} \end{bmatrix} = \frac{2}{V_A}\frac{\partial V_A}{\partial C_i}\begin{bmatrix} a_{XB} \\ a_{YB} \\ a_{ZB} \end{bmatrix} + \frac{qS}{m}\left\{\frac{\partial}{\partial V_A}\begin{bmatrix} -C_A \\ C_Y \\ -C_N \end{bmatrix}\frac{\partial V_A}{\partial C_i} + \frac{\partial}{\partial \alpha}\begin{bmatrix} -C_A \\ C_Y \\ -C_N \end{bmatrix}\frac{\partial \alpha}{\partial C_i} + \frac{\partial}{\partial \beta}\begin{bmatrix} -C_A \\ C_Y \\ -C_N \end{bmatrix}\frac{\partial \beta}{\partial C_i}\right\} \tag{201}$$

with

$$\begin{bmatrix} \partial V_A/\partial C_{26} & \partial\alpha/\partial C_{26} & \partial\beta/\partial C_{26} \\ \partial V_A/\partial C_{27} & \partial\alpha\ \partial C_{27} & \partial\beta\ \partial C_{27} \end{bmatrix} = \begin{bmatrix} u_A/V_A & \partial\alpha/\partial u & \partial\beta/\partial u \\ v_A/V_A & \partial\alpha/\partial v & \partial\beta/\partial v \end{bmatrix} \tag{202}$$

The partial derivatives of the equations of motion with respect to the center-of-gravity position and inertial angular rate error coefficients C_{31} thru C_{57} are

$$\left.\begin{aligned} \frac{\partial}{\partial C_i}\begin{bmatrix} \dot{u} \\ \dot{v} \\ \dot{w} \end{bmatrix} &= \begin{bmatrix} 0 \\ 0 \\ 0 \end{bmatrix} \\ \frac{\partial}{\partial C_i}\begin{bmatrix} \dot{h} \\ \dot{\varphi} \\ \dot{\theta} \end{bmatrix} &= \begin{bmatrix} 0 \\ 0 \\ 0 \end{bmatrix} \\ \frac{\partial}{\partial C_i}\begin{bmatrix} \dot{e}_0 \\ \dot{e}_1 \\ \dot{e}_2 \\ \dot{e}_3 \end{bmatrix} &= \frac{1}{2}\begin{bmatrix} -e_1 & -e_2 & -e_3 \\ e_0 & -e_3 & e_2 \\ e_3 & e_0 & -e_1 \\ -e_2 & e_1 & e_0 \end{bmatrix}\frac{\partial}{\partial C_i}\begin{bmatrix} P \\ Q \\ R \end{bmatrix} \end{aligned}\right\} \tag{203}$$

For the center-of-gravity error coefficients, C_{31} thru C_{33}

$$\frac{\partial}{\partial C_i}\begin{bmatrix} P \\ Q \\ R \end{bmatrix} = \begin{bmatrix} C_{48} & C_{51} & C_{54} & C_{57} \\ C_{49} & C_{52} & C_{55} & 0 \\ C_{50} & C_{53} & C_{56} & 0 \end{bmatrix} \frac{\partial}{\partial C_i}\begin{bmatrix} a_{XP} \\ a_{YP} \\ a_{ZP} \\ \bar{a}_P \end{bmatrix} \tag{204}$$

with

$$\begin{bmatrix} \partial a_{XP}/\partial C_{31} & \partial a_{YP}/\partial C_{31} & \partial a_{ZP}/\partial C_{31} \\ \partial a_{XP}/\partial C_{32} & \partial a_{YP}/\partial C_{32} & \partial a_{ZP}/\partial C_{32} \\ \partial a_{XP}/\partial C_{33} & \partial a_{YP}/\partial C_{33} & \partial a_{ZP}/\partial C_{33} \end{bmatrix} = \begin{bmatrix} -(Q^2 + R^2) & PQ + \dot{R} & PR - \dot{Q} \\ PQ - \dot{R} & -(P^2 + R^2) & QR + \dot{P} \\ PR + \dot{Q} & QR - \dot{P} & -(P^2 + Q^2) \end{bmatrix} \tag{205}$$

and for the inertial angular rate error coefficients, C_{36} thru C_{57}

$$\begin{bmatrix} \partial P/\partial C_{36} & \partial Q/\partial C_{36} & \partial R/\partial C_{36} \\ \partial P/\partial C_{37} & \cdots & \\ \partial P/\partial C_{38} & \cdots & \\ \partial P/\partial C_{39} & \cdots & \\ \partial P/\partial C_{40} & \cdots & \\ \partial P/\partial C_{41} & \cdots & \\ \partial P/\partial C_{42} & \cdots & \\ \partial P/\partial C_{43} & \cdots & \\ \partial P/\partial C_{44} & \cdots & \\ \partial P/\partial C_{45} & \cdots & \\ \partial P/\partial C_{46} & \cdots & \\ \partial P/\partial C_{47} & \cdots & \\ \partial P/\partial C_{48} & \cdots & \\ \partial P/\partial C_{49} & \cdots & \\ \partial P/\partial C_{50} & \cdots & \\ \partial P/\partial C_{51} & \cdots & \\ \partial P/\partial C_{52} & \cdots & \\ \partial P/\partial C_{53} & \cdots & \\ \partial P/\partial C_{54} & \cdots & \\ \partial P/\partial C_{55} & \cdots & \\ \partial P/\partial C_{56} & \cdots & \\ \partial P/\partial C_{57} & \cdots & \end{bmatrix} = \begin{bmatrix} P_M & 0 & 0 \\ Q_M & 0 & 0 \\ R_M & 0 & 0 \\ 0 & P_M & 0 \\ 0 & Q_M & 0 \\ 0 & R_M & 0 \\ 0 & 0 & P_M \\ 0 & 0 & Q_M \\ 0 & 0 & R_M \\ 1 & 0 & 0 \\ 0 & 1 & 0 \\ 0 & 0 & 1 \\ a_{XP} & 0 & 0 \\ 0 & a_{XP} & 0 \\ 0 & 0 & a_{XP} \\ a_{YP} & 0 & 0 \\ 0 & a_{YP} & 0 \\ 0 & 0 & a_{YP} \\ a_{ZP} & 0 & 0 \\ 0 & a_{ZP} & 0 \\ 0 & 0 & a_{ZP} \\ \bar{a}_P & 0 & 0 \end{bmatrix} + \begin{bmatrix} \partial a_{XP}/\partial C_{36} & \partial a_{YP}/\partial C_{36} & \partial a_{ZP}/\partial C_{36} \\ \partial a_{XP}/\partial C_{37} & \cdots & \\ \partial a_{XP}/\partial C_{38} & \cdots & \\ \partial a_{XP}/\partial C_{39} & \cdots & \\ \partial a_{XP}/\partial C_{40} & \cdots & \\ \partial a_{XP}/\partial C_{41} & \cdots & \\ \partial a_{XP}/\partial C_{42} & \cdots & \\ \partial a_{XP}/\partial C_{43} & \cdots & \\ \partial a_{XP}/\partial C_{44} & \cdots & \\ 0 & 0 & 0 \\ 0 & 0 & 0 \\ 0 & 0 & 0 \\ 0 & 0 & 0 \\ 0 & 0 & 0 \\ 0 & 0 & 0 \\ 0 & 0 & 0 \\ 0 & 0 & 0 \\ 0 & 0 & 0 \\ 0 & 0 & 0 \\ 0 & 0 & 0 \\ 0 & 0 & 0 \\ 0 & 0 & 0 \\ 0 & 0 & 0 \\ 0 & 0 & 0 \\ 0 & 0 & 0 \\ 0 & 0 & 0 \\ 0 & 0 & 0 \end{bmatrix} \begin{bmatrix} C_{48} & C_{49} & C_{50} \\ C_{51} & C_{52} & C_{53} \\ C_{54} & C_{55} & C_{56} \\ C_{57} & 0 & 0 \end{bmatrix} \tag{206}$$

VI. AUXILIARY TRANSFORMATIONS

The variables used in the equations of motion are not the most convenient in terms of the user. Rather than the inertial velocity and position relative to a spherical planet, it is preferable to use the velocity and position relative to an oblate rotating planet. Visualizing the vehicle attitude from the Euler parameters adds further complication, especially in terms of specifying the covariances of these correlated variables. Optional capability has, therefore, been included in STEP to input and output the state and covariance matrices in more convenient variables as shown in table 6.

TABLE 6.- INPUT/OUTPUT VARIABLES

Internal variables	Option 1	Option 2
u	V_A	V_A
v	γ_A	γ_A
w	λ_A	λ_A
h	h	h
φ	φ	φ
θ	θ	θ
e_0	$\bar{\psi}$	σ
e_1	$\bar{\theta}$	β
e_2	$\bar{\phi}$	α
e_3		

Let X be the internal variables in STEP (i.e., u, v, w, h, φ, θ, e_0, e_1, e_2, and e_3), and let X' be the Option 1 or Option 2 variables. Then, the input transformation for the state variables is

$$X = h_I\,(X') \tag{207a}$$

and for the covariance and correlation matrices

$$P = N_I \; P' \; N_I^T \tag{207b}$$

$$C_{uz} = N_I \; C'_{uz} \tag{207c}$$

$$C_{vz} = N_I \; C'_{vz} \tag{207d}$$

where the matrix N_I is

$$N_I = (\partial X / \partial X') \tag{208}$$

The output transformations are

$$X' = h_O \; (X) \tag{209a}$$

$$P' = N_O \; P \; N_O^T \tag{209b}$$

$$C'_{uz} = N_O \; C_{uz} \tag{209c}$$

$$C'_{vz} = N_O \; C_{vz} \tag{209d}$$

where the matrix N_O is

$$N_O = (\partial X' / \partial X) \tag{210}$$

We will next proceed to develop the relationships h_I and h_O and the transformation matrices N_I and N_O for the variables in table 6.

A. Option 1 Transformation

When using quaternions to transform from the G-frame to the B-frame, one can write three quaternions representing each of the Euler angle rotations. From equations (65) and (78), the quaternion representing the rotation $\overline{\Psi}$ about the e_{ZG} axis in a right-hand sense is

$$Z_{\overline{\Psi}} = \cos \frac{\overline{\Psi}}{2} + 0 \cdot i + 0 \cdot j + \sin \frac{\overline{\Psi}}{2} \cdot k \tag{211}$$

because $\zeta = \eta = \pi/2$, $\xi = 0$, and $\mu = \bar{\psi}$. The rotation about the new y-axis, through the angle $\bar{\theta}$ is

$$Y_{\bar{\theta}} = \cos\frac{\bar{\theta}}{2} + 0 \cdot i + \sin\frac{\bar{\theta}}{2} \cdot j + 0 \cdot k \tag{212}$$

Finally, rotating through an angle $\frac{\bar{\phi}}{2}$ about the x-axis yields

$$X_{\bar{\phi}} = \cos\frac{\bar{\phi}}{2} + \sin\frac{\bar{\phi}}{2} \cdot i + 0 \cdot j + 0 \cdot k \tag{213}$$

Multiplying these quaternions together yields the complete transformation

$$\begin{aligned} Z_{\bar{\psi}}\, Y_{\bar{\theta}}\, X_{\bar{\phi}} = {} & \left(\cos\frac{\bar{\psi}}{2}\cos\frac{\bar{\theta}}{2}\cos\frac{\bar{\phi}}{2} - \sin\frac{\bar{\psi}}{2}\sin\frac{\bar{\theta}}{2}\sin\frac{\bar{\phi}}{2}\right) \\ & + \left(\cos\frac{\bar{\psi}}{2}\cos\frac{\bar{\theta}}{2}\sin\frac{\bar{\phi}}{2} - \sin\frac{\bar{\psi}}{2}\sin\frac{\bar{\theta}}{2}\cos\frac{\bar{\phi}}{2}\right) i \\ & + \left(\cos\frac{\bar{\psi}}{2}\sin\frac{\bar{\theta}}{2}\cos\frac{\bar{\phi}}{2} - \sin\frac{\bar{\psi}}{2}\cos\frac{\bar{\theta}}{2}\sin\frac{\bar{\phi}}{2}\right) j \\ & + \left(\sin\frac{\bar{\psi}}{2}\cos\frac{\bar{\theta}}{2}\cos\frac{\bar{\phi}}{2} - \cos\frac{\bar{\psi}}{2}\sin\frac{\bar{\theta}}{2}\sin\frac{\bar{\phi}}{2}\right) k \end{aligned} \tag{214}$$

which equals

$$Z_{\bar{\psi}}\, Y_{\bar{\theta}}\, X_{\bar{\phi}} = e_0 + e_1\, i + e_2\, j + e_3\, k \tag{215}$$

Thus, equations (214) and (215) relate the Euler parameters to the Euler angles.

Writing the Euler angles in terms of a transformation matrix between the G-frame and B-frame yields

$$G = \begin{bmatrix} (\cos\bar{\psi}\cos\bar{\theta}) & (\sin\bar{\psi}\cos\bar{\theta}) & (-\sin\bar{\theta}) \\ (-\cos\bar{\phi}\sin\bar{\psi} + \sin\bar{\phi}\sin\bar{\theta}\cos\bar{\psi}) & (\cos\bar{\phi}\cos\bar{\psi} + \sin\bar{\phi}\sin\bar{\theta}\sin\bar{\psi}) & (\cos\bar{\theta}\sin\bar{\phi}) \\ (\sin\bar{\phi}\sin\bar{\psi} + \cos\bar{\phi}\sin\bar{\theta}\cos\bar{\psi}) & (-\sin\bar{\phi}\cos\bar{\psi} + \cos\bar{\phi}\sin\bar{\theta}\sin\bar{\psi}) & (\cos\bar{\theta}\cos\bar{\phi}) \end{bmatrix} \tag{216}$$

Equating elements in equations (79) and (216), we obtain

$$\left.\begin{aligned}
\sin \bar{\theta} &= -g_{13} = -2\,(e_1 e_3 - e_0 e_2) \\
\tan \bar{\phi} &= \frac{g_{23}}{g_{33}} = \frac{2\,(e_0 e_1 + e_2 e_3)}{e_0^2 + e_1^2 - e_2^2 - e_3^2} \\
\tan \bar{\psi} &= \frac{g_{12}}{g_{11}} = \frac{2\,(e_1 e_2 + e_0 e_3)}{e_0^2 - e_1^2 - e_2^2 + e_3^2}
\end{aligned}\right\} \tag{217}$$

Referring to figure 2 and using the above relations, we can write the input and output transformations h_I and h_O as follows:

$$\left.\begin{aligned}
&\underline{X} \qquad\qquad\qquad\qquad \underline{h_I(X')} \\
&u = V_A \cos \gamma_A \cos \lambda_A - u_w \\
&v = V_A \cos \gamma_A \sin \lambda_A + r\Omega_P \cos \varphi - v_w \\
&w = -V_A \sin \gamma_A \\
&h = h_o + R_o - R_E \\
&\varphi = \varphi \\
&\theta = \theta \\
&e_0 = e_{01} + e_{02} = \cos \frac{\bar{\psi}}{2} \cos \frac{\bar{\theta}}{2} \cos \frac{\bar{\phi}}{2} + \sin \frac{\bar{\psi}}{2} \sin \frac{\bar{\theta}}{2} \sin \frac{\bar{\phi}}{2} \\
&e_1 = e_{11} - e_{12} = \cos \frac{\bar{\psi}}{2} \cos \frac{\bar{\theta}}{2} \sin \frac{\bar{\phi}}{2} - \sin \frac{\bar{\psi}}{2} \sin \frac{\bar{\theta}}{2} \cos \frac{\bar{\phi}}{2} \\
&e_2 = e_{21} + e_{22} = \cos \frac{\bar{\psi}}{2} \sin \frac{\bar{\theta}}{2} \cos \frac{\bar{\phi}}{2} + \sin \frac{\bar{\psi}}{2} \cos \frac{\bar{\theta}}{2} \sin \frac{\bar{\phi}}{2} \\
&e_3 = e_{31} - e_{32} = \sin \frac{\bar{\psi}}{2} \cos \frac{\bar{\theta}}{2} \cos \frac{\bar{\phi}}{2} - \cos \frac{\bar{\psi}}{2} \sin \frac{\bar{\theta}}{2} \sin \frac{\bar{\phi}}{2}
\end{aligned}\right\} \tag{218}$$

$$
\left.
\begin{aligned}
&\underline{X'} \qquad\qquad\qquad\qquad \underline{h_0(X)} \\
&V_A = \left[u_A^2 + v_A^2 + w^2\right]^{\frac{1}{2}} = \left[\left(u + u_w\right)^2 + \left(v - r\Omega_P \cos\varphi + v_w\right)^2 + w^2\right]^{\frac{1}{2}} \\
&\gamma_A = \arcsin\left(-w_A / V_A\right) \\
&\lambda_A = \arctan\left(v_A / u_A\right) \\
&h_o = h - R_o + R_E \\
&\varphi = \varphi \\
&\theta = \theta \\
&\bar{\psi} = \arctan\left(g_{12}/g_{11}\right) = \arctan\left[2\left(e_1 e_2 + e_0 e_3\right)/\left(e_0^2 + e_1^2 - e_2^2 - e_3^2\right)\right] \\
&\bar{\theta} = \arcsin\left(g_{13}\right) = -\arcsin\left[2\left(e_1 e_3 - e_0 e_2\right)\right] \\
&\bar{\varphi} = \arctan\left(g_{23}/g_{33}\right) = \arctan\left[2\left(e_0 e_1 + e_2 e_3\right)/\left(e_0^2 - e_1^2 - e_2^2 + e_3^2\right)\right]
\end{aligned}
\right\} \quad (219)
$$

Taking partial derivatives of X with respect to X' in equations (218) yields the N_I transformation matrix in table 7 where

$$
\frac{dR_o}{d\varphi} = -\frac{R_o^3}{R_E^2}\left[\left(\frac{R_E}{R_P}\right)^2 - 1\right] \sin\varphi \cos\varphi \qquad (220)
$$

Taking partial derivatives of X' with respect to X in equations (219) yields the N_O transformation matrix in table 8.

TABLE 7.- INPUT TRANSFORMATION FOR OPTION 1 VARIABLES, $(\partial X/\partial X')$

X \ X′	V	γ	λ	h	φ	θ	$\bar{\psi}$	$\bar{\theta}$	$\bar{\varphi}$
u	$\cos\gamma_A \cos\lambda_A$	$-V_A \sin\gamma_A \cos\lambda_A$	$-V_A \cos\gamma_A \sin\lambda_A$	$-\frac{\partial u_w}{\partial h_o}$	0	0	0	0	0
v	$\cos\gamma_A \sin\lambda_A$	$-V_A \sin\gamma_A \sin\lambda_A$	$V_A \cos\gamma_A \cos\lambda_A$	$\Omega_P \cos\varphi - \frac{\partial v_w}{\partial h_o}$	$\frac{dR_o}{d\varphi}\Omega_P \cos\varphi$ $-r\Omega_P \sin\varphi$	0	0	0	0
w	$-\sin\gamma_A$	$-V_A \cos\gamma_A$	0	0	0	0	0	0	0
h	0	0	0	1	$\frac{dR_o}{d\varphi}$	0	0	0	0
φ	0	0	0	0	1	0	0	0	0
θ	0	0	0	0	0	1	0	0	0
e_0	0	0	0	0	0	0	$-\frac{e_3}{2}$	$-\frac{(e_{21} - e_{22})}{2}$	$-\frac{e_1}{2}$
e_1	0	0	0	0	0	0	$-\frac{e_2}{2}$	$-\frac{(e_{31} + e_{32})}{2}$	$\frac{e_0}{2}$
e_2	0	0	0	0	0	0	$\frac{e_1}{2}$	$\frac{(e_{01} - e_{02})}{2}$	$\frac{e_3}{2}$
e_3	0	0	0	0	0	0	$\frac{e_0}{2}$	$-\frac{(e_{11} + e_{12})}{2}$	$-\frac{e_2}{2}$

TABLE 8.- OUTPUT TRANSFORMATION FOR OPTION 1 VARIABLES ($\partial X'/\partial X$)

X' \ X	u	v	w	h	φ	θ
V_A	$\frac{u_A}{V_A}$	$\frac{v_A}{V_A}$	$\frac{w}{V_A}$	$\frac{1}{V_A}\left[u_A \frac{\partial u_w}{\partial h} + v_A\left(\frac{\partial v_w}{\partial h} - \Omega_p \cos \varphi\right)\right]$	$\frac{1}{V_A}\left[u_A \frac{\partial u_w}{\partial \varphi} + v_A\left(\frac{\partial v_w}{\partial \varphi} + r\Omega_p \sin \varphi\right)\right]$	0
γ_A	$\frac{u_A w}{V_A^2\sqrt{u_A^2 + v_A^2}}$	$\frac{v_A w}{V_A^2\sqrt{u_A^2 + v_A^2}}$	$-\frac{\sqrt{u_A^2 + v_A^2}}{V_A^2}$	$\frac{w}{V_A\sqrt{u_A^2 + v_A^2}} \frac{\partial V_A}{\partial h}$	$\frac{w}{V_A\sqrt{u_A^2 - v_A^2}} \frac{\partial V_A}{\partial \varphi}$	0
λ_A	$\frac{-v_A}{\left(u_A^2 + v_A^2\right)}$	$\frac{u_A}{\left(u_A^2 + v_A^2\right)}$	0	$-\frac{1}{\left(u_A^2 + v_A^2\right)}\left[v_A \frac{\partial u_w}{\partial h} - u_A\left(\frac{\partial v_w}{\partial h} - \Omega_p \cos \varphi\right)\right]$	$-\frac{1}{\left(u_A^2 + v_A^2\right)}\left[v_A \frac{\partial u_w}{\partial \varphi} - u_A\left(\frac{\partial v_w}{\partial \varphi} - r\Omega_p \sin \varphi\right)\right]$	0
h_o	0	0	0	1	$-\frac{dR_o}{d\varphi}$	0
φ	0	0	0	0	1	0
θ	0	0	0	0	0	1
$\bar{\psi}$	0	0	0	0	0	0
$\bar{\theta}$	0	0	0	0	0	0
$\bar{\varphi}$	0	0	0	0	0	0

e_0	e_1	e_2	e_3
0	0	0	0
0	0	0	0
0	0	0	0
0	0	0	0
0	0	0	0
0	0	0	0
$2\left[\frac{e_3 g_{11} - e_0 g_{12}}{g_{11}^2 + g_{12}^2}\right]$	$2\left[\frac{e_2 g_{11} - e_1 g_{12}}{g_{11}^2 + g_{12}^2}\right]$	$2\left[\frac{e_1 g_{11} + e_2 g_{12}}{g_{11}^2 + g_{12}^2}\right]$	$2\left[\frac{e_0 g_{11} + e_3 g_{12}}{g_{11}^2 + g_{12}^2}\right]$
$\frac{2e_2}{\sqrt{1 - g_{13}^2}}$	$-\frac{2e_3}{\sqrt{1 - g_{13}^2}}$	$\frac{2e_0}{\sqrt{1 - g_{13}^2}}$	$-\frac{2e_1}{\sqrt{1 - g_{13}^2}}$
$2\left[\frac{e_1 g_{33} - e_0 g_{23}}{g_{33}^2 + g_{23}^2}\right]$	$2\left[\frac{e_0 g_{33} + e_1 g_{23}}{g_{33}^2 + g_{23}^2}\right]$	$2\left[\frac{e_3 g_{33} + e_2 g_{23}}{g_{33}^2 + g_{23}^2}\right]$	$2\left[\frac{e_2 g_{33} - e_3 g_{23}}{g_{33}^2 + g_{23}^2}\right]$

B. Option 2 Transformation

We will commence by relating the angles σ, α, and β, to the Euler parameters in a manner similar to the Euler angles in the previous Section. To accomplish this, we must start at the G-frame and rotate through the following five angles [see figs. 2 and 4(a)]:

Rotate through λ_A about the z-axis

$$Z_{\lambda_A} = \cos\frac{\lambda_A}{2} + \sin\frac{\lambda_A}{2}\ k \tag{221}$$

Rotate through γ_A about the y-axis $\left(\text{aligned with the velocity vector } V_A\right)$

$$Y_{\gamma_A} = \cos\frac{\gamma_A}{2} + \sin\frac{\gamma_A}{2}\ j \tag{222}$$

Rotate through σ about the x-axis

$$X_{\sigma} = \cos\frac{\sigma}{2} + \sin\frac{\sigma}{2}\ i \tag{223}$$

Rotate through $-\beta$ about the z-axis

$$Z_{-\beta} = \cos\frac{\beta}{2} - \sin\frac{\beta}{2}\ k \tag{224}$$

Rotate through α about the y-axis (aligned with the B-frame)

$$Y_{\alpha} = \cos\frac{\alpha}{2} + \sin\frac{\alpha}{2}\ j \tag{225}$$

Combining all five quaternions and equating elements to e_0, e_1, e_2, and e_3, we obtain the attitude components of h_I presented in equations (226) thru (228) below.

Expanding the above angles into a single transformation matrix and equating elements to G in equation (79), we can solve for σ. The variables α and β can be obtained from equations (135) and (136). Thus, the Option 2 nonlinear input and output transformations h_I and h_O are as follows:

$$
\left.
\begin{array}{ll}
\underline{X} & \underline{h_I(X')} \\
u = V_A \cos\gamma_A \cos\lambda_A - u_w & \\
v = V_A \cos\gamma_A \sin\lambda_A + r\Omega_P \cos\varphi - v_w & \\
w = -V_A \sin\gamma_A & \\
h = h_o + R_o - R_E & \\
\varphi = \varphi & \\
\theta = \theta & \\
e_0 = d_0 b_0 - d_1 b_1 - d_2 b_2 - d_3 b_3 & \\
e_1 = d_0 b_1 + d_1 b_0 + d_2 b_3 - d_3 b_2 & \\
e_2 = d_0 b_2 - d_1 b_3 + d_2 b_0 + d_3 b_1 & \\
e_3 = d_0 b_3 + d_1 b_2 - d_2 b_1 + d_3 b_0 &
\end{array}
\right\} \qquad (226)
$$

where

$$
\left.
\begin{aligned}
d_0 &= \cos\frac{\lambda_A}{2}\cos\frac{\gamma_A}{2} \\
d_1 &= -\sin\frac{\lambda_A}{2}\sin\frac{\gamma_A}{2} \\
d_2 &= \cos\frac{\lambda_A}{2}\sin\frac{\gamma_A}{2} \\
d_3 &= \sin\frac{\lambda_A}{2}\cos\frac{\gamma_A}{2}
\end{aligned}
\right\} \qquad (227)
$$

and

$$\left.\begin{aligned}
b_0 &= b_{01} - b_{02} = \cos\frac{\sigma}{2}\cos\frac{\beta}{2}\cos\frac{\alpha}{2} - \sin\frac{\sigma}{2}\sin\frac{\beta}{2}\sin\frac{\alpha}{2} \\
b_1 &= b_{11} + b_{12} = \sin\frac{\sigma}{2}\cos\frac{\beta}{2}\cos\frac{\alpha}{2} + \cos\frac{\sigma}{2}\sin\frac{\beta}{2}\sin\frac{\alpha}{2} \\
b_2 &= b_{21} + b_{22} = \cos\frac{\sigma}{2}\cos\frac{\beta}{2}\sin\frac{\alpha}{2} + \sin\frac{\sigma}{2}\sin\frac{\beta}{2}\cos\frac{\alpha}{2} \\
b_3 &= b_{31} - b_{32} = \sin\frac{\sigma}{2}\cos\frac{\beta}{2}\sin\frac{\alpha}{2} - \cos\frac{\sigma}{2}\sin\frac{\beta}{2}\cos\frac{\alpha}{2}
\end{aligned}\right\} \tag{228}$$

$$\left.\begin{aligned}
&\underline{X'} \qquad\qquad\qquad\qquad \underline{h_0(X)} \\
V_A &= \left[u_A^2 + v_A^2 + w^2\right]^{\frac{1}{2}} = \left[\left(u + u_w\right)^2 + \left(v - r\Omega_P\cos\varphi + v_w\right)^2 + w^2\right]^{\frac{1}{2}} \\
\gamma_A &= \arcsin\left(-w/V_A\right) \\
\lambda_A &= \arctan\left(v_A/u_A\right) \\
h_o &= h - R_o + R_E \\
\varphi &= \varphi \\
\theta &= \theta \\
\sigma &= \arctan\left[\frac{g_{23} + \sin\beta\sin\gamma_A}{\left(g_{22}\cos\lambda_A - g_{21}\sin\lambda_A\right)\cos\gamma_A}\right] \\
\beta &= \arctan\left(v_B/\sqrt{u_B^2 + w_B^2}\right) \\
\alpha &= \arctan\left(w_B/u_B\right)
\end{aligned}\right\} \tag{229}$$

where

$$\begin{bmatrix} u_B \\ v_B \\ w_B \end{bmatrix} = [G]\begin{bmatrix} u + u_w \\ v - r\Omega_P\cos\varphi + v_w \\ w \end{bmatrix} \tag{230}$$

Taking partial derivatives of X with respect to X' in equations (226) thru (228) yields the N_I transformation matrix in table 9.

Taking partial derivatives of X' with respect to X in equations (229) and (230) and also (79) yields the output transformation N_O in table 10 where

$$
\begin{aligned}
a_1 &= \cos\sigma \sin\beta \cos\gamma_A + \sin\sigma \tan\gamma_A D_2 \\
a_2 &= \sin\sigma \left(g_{22} \sin\lambda_A + g_{21} \cos\lambda_A\right) \cos\gamma_A \\
a_3 &= \cos\sigma \cos\beta \sin\gamma_A
\end{aligned}
\tag{231}
$$

and

$$
\begin{aligned}
D_1 &= g_{23} + \sin\beta \sin\gamma_A \\
D_2 &= \left(g_{22} \cos\lambda_A - g_{21} \sin\lambda_A\right) \cos\gamma_A
\end{aligned}
\tag{232}
$$

and

$$
\begin{aligned}
h_1 &= u_A e_0 + v_A e_3 - w e_2 \\
h_2 &= u_A e_1 + v_A e_2 + w e_3 \\
h_3 &= u_A e_2 - v_A e_1 + w e_0 \\
h_4 &= u_A e_3 - v_A e_0 - w e_1
\end{aligned}
\tag{233}
$$

Note that in STEP2 no atmospheric winds are included; therefore, V_A is the velocity relative to the planet surface. For the nonlinear state only the geodetic latitude is inputed and outputed. The transformation from geocentric to geodetic latitude and vice versa is

$$
\tan\varphi = \tan\varphi_D \Big/ \left(\frac{R_E}{R_P}\right)^2 \tag{234}
$$

TABLE 9.- INPUT TRANSFORMATIONS FOR OPTION 2 VARIABLES ($\partial X/\partial X'$)

$X \backslash X_1$	V_R	γ	λ	h	φ	θ	σ	β	α
u	$\cos\gamma_A \cos\lambda_A$	$-V_A \sin\gamma_A \cos\lambda_A$	$-V_A \cos\gamma_A \sin\lambda_A$	$-\frac{\partial u_w}{\partial h_o}$	0	0	0	0	0
v	$\cos\gamma_A \sin\lambda_A$	$-V_A \sin\gamma_A \sin\lambda_A$	$V_A \cos\gamma_A \cos\lambda_A$	$\Omega_P \cos\varphi - \frac{\partial v_w}{\partial h_o}$	$-r\Omega_P \sin\varphi + \frac{dR_o}{d\varphi}\Omega_P \cos\varphi$	0	0	0	0
w	$-\sin\gamma_A$	$-V_A \cos\gamma_A$	0	0	0	0	0	0	0
h	0	0	0	1	$\frac{dR_o}{d\varphi}$	0	0	0	0
φ	0	0	0	0	1	0	0	0	0
θ	0	0	0	0	0	1	0	0	0
e_0	0	$-\frac{1}{2}[e_2 + 2(d_1b_3 - d_3b_1)]$	$-\frac{e_3}{2}$	0	0	0	$-\frac{1}{2}[e_1 - 2(d_2b_3 - d_3b_2)]$	$\frac{1}{2}[-d_0(b_{31} + b_{32}) - d_1(b_{21} - b_{22}) - d_2(b_{11} - b_{12}) + d_3(b_{01} + b_{02})]$	$-\frac{e_2}{2}$
e_1	0	$\frac{1}{2}[e_3 - 2(d_1b_2 + d_3b_0)]$	$-\frac{e_2}{2}$	0	0	0	$\frac{1}{2}[e_0 + 2(d_2b_2 + d_3b_3)]$	$\frac{1}{2}[d_0(b_{21} - b_{22}) - d_1(b_{31} + b_{32}) - d_2(b_{01} + b_{02}) - d_3(b_{11} - b_{12})]$	$-\frac{e_3}{2}$
e_2	0	$\frac{1}{2}[e_0 + 2(d_1b_1 + d_3b_3)]$	$\frac{e_1}{2}$	0	0	0	$-\frac{1}{2}[e_3 + 2(d_2b_1 - d_3b_0)]$	$\frac{1}{2}[d_0(b_{11} - b_{12}) + d_1(b_{01} + b_{02}) - d_2(b_{31} + b_{32}) + d_3(b_{21} - b_{22})]$	$\frac{e_0}{2}$
e_3	0	$-\frac{1}{2}[e_1 - 2(d_1b_0 - d_3b_2)]$	$\frac{e_0}{2}$	0	0	0	$\frac{1}{2}[e_2 - 2(d_2b_0 + d_3b_1)]$	$\frac{1}{2}[-d_0(b_{01} + b_{02}) + d_1(b_{11} - b_{12}) - d_2(b_{21} - b_{22}) - d_3(b_{31} + b_{32})]$	$\frac{e_1}{2}$

TABLE 10.- OUTPUT TRANSFORMATION FOR OPTION 2 VARIABLES $(\partial X'/\partial X)$[a]

X′ \ X	u	v	w
V_R	$\frac{u_A}{V_A}$	$\frac{v_A}{V_A}$	$\frac{w}{V_A}$
γ	$\frac{u_A w}{V_A^2\sqrt{u_A^2 + v_A^2}}$	$\frac{v_A w}{V_A^2\sqrt{u_A^2 + v_A^2}}$	$-\frac{\sqrt{u_A^2 + v_A^2}}{V_A^2}$
λ	$\frac{-v_A}{\left(u_A^2 + v_A^2\right)}$	$\frac{u_A}{\left(u_A^2 + v_A^2\right)}$	0
h	0	0	0
φ	0	0	0
θ	0	0	0
σ	$\frac{\left(a_1 \frac{\partial\gamma_A}{\partial u} + a_2 \frac{\partial\gamma_A}{\partial u} + a_3 \frac{\partial\beta}{\partial u}\right)}{\sqrt{D_1^2 + D_2^2}}$	$\frac{\left(a_1 \frac{\partial\gamma_A}{\partial v} + a_2 \frac{\partial\lambda_A}{\partial v} + a_3 \frac{\partial\beta}{\partial v}\right)}{\sqrt{D_1^2 + D_2^2}}$	$\frac{\left(a_1 \frac{\partial\gamma_A}{\partial w} + a_2 \frac{\partial\lambda_A}{\partial w} + a_3 \frac{\partial\beta}{\partial w}\right)}{\sqrt{D_1^2 + D_2^2}}$
β	$\frac{\left[C\beta g_{21} - T\beta\left(u_A - g_{21}v_B\right)/V_A\right]}{V_A}$	$\frac{\left[C\beta g_{22} - T\beta\left(v_A - g_{22}v_B\right)/V_A\right]}{V_A}$	$\frac{\left[C\beta g_{23} - T\beta\left(w - g_{23}v_B\right)/V_A\right]}{V_A}$
α	$\frac{\left(u_B g_{31} - w_B g_{11}\right)}{\left(u_B^2 + w_B^2\right)}$	$\frac{\left(u_B g_{32} - w_B g_{12}\right)}{\left(u_B^2 + w_B^2\right)}$	$\frac{\left(u_B g_{33} - w_B g_{13}\right)}{\left(u_B^2 + w_B^2\right)}$

X′ \ X	θ	e_0	e_1
V_R	0	0	0
γ	0	0	0
λ	0	0	0
h	0	0	0
φ	0	0	0
θ	1	0	0
σ	0	$\frac{a_3 \frac{\partial\beta}{\partial e_0} + 2\left[C\sigma e_1 - S\sigma C\gamma_A\left(C\lambda_A e_0 + S\lambda_A e_3\right)\right]}{\sqrt{D_1^2 + D_2^2}}$	$\frac{a_3 \frac{\partial\beta}{\partial e_1} + 2\left[C\sigma e_0 + S\sigma C\gamma_A\left(C\lambda_A e_1 + S\lambda_A e_2\right)\right]}{\sqrt{D_1^2 + D_2^2}}$
β	0	$\frac{2\left[-C\beta h_4 - T\beta\left(u_B h_1 + w_B h_3\right)/V_A\right]}{V_A}$	$\frac{2\left[C\beta h_3 - T\beta\left(u_B h_2 + w_B h_4\right)/V_A\right]}{V_A}$
α	0	$\frac{2\left(u_B h_3 - w_B h_1\right)}{\left(u_B^2 + w_B^2\right)}$	$\frac{2\left(u_B h_4 - w_B h_2\right)}{\left(u_B^2 + w_B^2\right)}$

[a]Sine, cosine, and tangent are abbreviated by S, C, and T.

TABLE 10.- OUTPUT TRANFORMATION FOR OPTION 2 VARIABLES ($\partial X'/\partial X$) - Concluded[a]

h	φ
$\frac{1}{V_A}\left[u_A \frac{\partial u_w}{\partial h} + v_A\left(\frac{\partial v_w}{\partial h} - \Omega_P \cos\varphi\right)\right]$	$\frac{1}{V_A}\left[u_A \frac{\partial u_w}{\partial \varphi} + v_A\left(\frac{\partial v_w}{\partial \varphi} + r\Omega_P \sin\varphi\right)\right]$
$\frac{w}{V_A\sqrt{u_A^2 + v_A^2}} \frac{\partial V_A}{\partial h}$	$\frac{w}{V_A\sqrt{u_A^2 + v_A^2}} \frac{\partial V_A}{\partial \varphi}$
$-\frac{1}{\left(u_A^2 + v_A^2\right)}\left[v_A \frac{\partial u_w}{\partial h} - u_a\left(\frac{\partial v_w}{\partial h} - \Omega_P \cos\varphi\right)\right]$	$-\frac{1}{\left(u_A^2 + v_A^2\right)}\left[v_A \frac{\partial u_w}{\partial \varphi} - u_A\left(\frac{\partial v_w}{\partial \varphi} - r\Omega_P \sin\varphi\right)\right]$
1	$-\frac{dR_o}{d\varphi}$
0	1
0	0
$\frac{\left(a_1 \frac{\partial \gamma_A}{\partial h} + a_2 \frac{\partial \lambda_A}{\partial h} + a_3 \frac{\partial \beta}{\partial h}\right)}{\sqrt{D_1^2 + D_2^2}}$	$\frac{a_1 \frac{\partial \gamma_A}{\partial \varphi} + a_2 \frac{\partial \lambda_A}{\partial \varphi} + a_3 \frac{\partial \beta}{\partial \varphi}}{\sqrt{D_1^2 + D_2^2}}$
$-\Omega_P C\varphi \frac{\partial \beta}{\partial v}$	$r\Omega_P S\varphi \frac{\partial \beta}{\partial v}$
$-\Omega_P C\varphi \frac{\partial \alpha}{\partial v}$	$r\Omega_P S\varphi \frac{\partial \alpha}{\partial v}$
e_2	e_3
0	0
0	0
0	0
0	0
0	0
0	0
$\frac{a_3 \frac{\partial \beta}{\partial e_2} + 2\left[C\sigma e_3 - S\sigma C\gamma_A\left(C\lambda_A e_2 - S\lambda_A e_1\right)\right]}{\sqrt{D_1^2 + D_2^2}}$	$\frac{a_3 \frac{\partial \beta}{\partial e_3} + 2\left[C\sigma e_2 + S\sigma C\gamma_A\left(C\lambda_A e_3 - S\lambda_A e_o\right)\right]}{\sqrt{D_1^2 + D_2^2}}$
$\frac{2\left[C\beta h_2 + T\beta\left(u_B h_3 - w_B h_1\right)/V_A\right]}{V_A}$	$\frac{2\left[-C\beta h_1 + T\beta\left(u_B h_4 - w_B h_2\right)/V_A\right]}{V_A}$
$\frac{2\left(u_B h_1 + w_B h_3\right)}{\left(u_B^2 + w_B^2\right)}$	$\frac{2\left(u_B h_2 + w_B h_4\right)}{\left(u_B^2 + w_B^2\right)}$

[a]Sine, cosine, and tangent are abbreviated S, C, and T.

VII. MEASUREMENT EQUATIONS

In addition to the dynamic models that describe the motion of the vehicle, the minimum variance filter also requires measurement models that mathematically describe the measurements being processed. In Section III, the measurement model is described by equation (44), which consists of the nonlinear algebraic relations that yield the measurement variables as functions of the state and measurement parameters. Coefficients of the linearized measurement equations G and H are shown in equations (51) to contain partial derivatives of the nonlinear measurement equations with respect to the state and measurement parameters.

In this section, the nonlinear equations for the measurements solved in STEP are described along with their partial derivatives. Note that the measurement equations of concern in this section are those that are satisfied in a minimum variance sense by STEP. The inertial angular rate measurements (and accelerometer measurements in STEP2) are satisfied exactly by the dynamic models and, therefore, are described in Section IV.

A. Radar Tracking (STEP1 and STEP2)

1. Nonlinear equations.- Consider a tracking site located on an oblate planet that instantaneously measures the position vector from the site to a vehicle. The vector is described by its magnitude R_c, azimuth angle A_c, and elevation angle E_c, as shown in figure 6. Knowing the position of the vehicle (r, φ, θ), the position of the tracking site $\left(r_T, \varphi_T, \theta_T\right)$, we desire to determine R_c, A_c, and E_c.

The components of vehicle position in the G-frame axes system are $0, 0, -r$. We wish to transform components to a geodetically oriented Cartesian axes (S-frame) system having origin at the tracking site and e_{XS}, e_{YS}, e_{ZS} directed vertical (to the geodetic horizon), east and north, respectively. The transformation involves the following translations and rotations

1) Translate from vehicle to planet center;
2) Rotate through φ;
3) Rotate through $\Theta = \theta - \theta_T$;

4) Rotate through φ_T;

5) Translate from planet center to tracking site;

6) Rotate through $\Phi = \varphi_{DT} - \varphi$ to align axes with geodtic horizon.

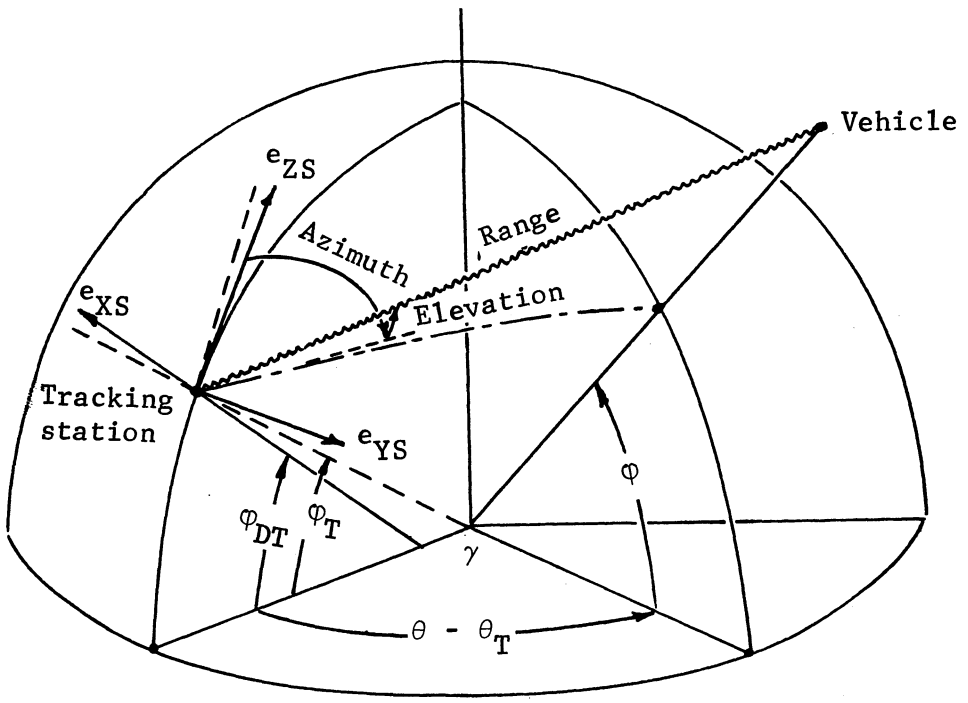

Figure 6.- Radar Tracking Schematic

Combining these translations and rotations, we obtain the components of vehicle position in the S-frame axes to be

$$\begin{bmatrix} x_s \\ y_s \\ z_s \end{bmatrix} = r \begin{bmatrix} \cos\Theta \cos\varphi \cos\varphi_{DT} + \sin\varphi \sin\varphi_{DT} \\ \sin\Theta \cos\varphi \\ -\cos\Theta \cos\varphi \sin\varphi_{DT} + \sin\varphi \cos\varphi_{DT} \end{bmatrix} + r_T \begin{bmatrix} -\cos\Phi \\ 0 \\ \sin\Phi \end{bmatrix} \tag{235}$$

where

$$\Theta = \theta - \theta_T$$

$$\Phi = \varphi_{DT} - \varphi_T \tag{236}$$

$$r_T = R_{OT} + h_{OT}$$

and

$$\varphi_{DT} = \tan^{-1}\left[\left(\frac{R_E}{R_P}\right)^2 \tan \varphi_t\right] \tag{237}$$

From figure 6, we see that

$$R_c = \left(x_s^2 + y_s^2 + z_s^2\right)^{1/2} \tag{238a}$$

$$\sin A_c = \left(y_s \Big/ \sqrt{y_s^2 + z_s^2}\right) \quad \cos A_c = \left(z_s \Big/ \sqrt{y_s^2 + z_s^2}\right) \tag{238b}$$

$$\sin E_c = \left(x_s \Big/ R_c\right) \quad \cos E_c = \left(\sqrt{y_s^2 + z_s^2} \Big/ R_c\right) \tag{238c}$$

The error model used in conjunction with the tracking measurement is

$$\left.\begin{aligned} R_M &= C_{76}\, R_c + C_{79} + C_{82}\, \dot{R}_c + C_{85} \csc E_c \\ A_M &= C_{77}\, A_c + C_{80} + C_{83}\, \dot{A}_c \\ E_M &= C_{78}\, E_c + C_{81} + C_{84}\, \dot{E}_c + C_{86} \operatorname{ctn} E_c \end{aligned}\right\} \tag{239}$$

The rate terms are obtained by differentiating equations (238)

$$\begin{aligned} \dot{R}_c &= \left(x_s\, \dot{x}_s + y_s\, \dot{y}_s + z_s\, \dot{z}_s\right) \Big/ R_c \\ \dot{A}_c &= \left(z_s\, \dot{y}_s - y_s\, \dot{z}_s\right) \Big/ \left(y_s^2 + z_s^2\right) \\ \dot{E}_c &= \left(R_c\, \dot{x}_s - x_s\, \dot{R}_c\right) \Big/ R_c \sqrt{y_s^2 + z_s^2} \end{aligned} \tag{240}$$

where

$$\begin{bmatrix} \dot{x}_s \\ \dot{y}_s \\ \dot{z}_s \end{bmatrix} = \begin{bmatrix} \left(x_s + r_T\, C\Phi\right)/r & r\left(C\varphi\, S\varphi_{DT} - C\Theta\, S\varphi\, C\varphi_{DT}\right) & -y_s\, C\varphi_{DT} \\ y_s/r & -r\, S\Theta\, S\varphi & r\, C\Theta\, C\phi \\ \left(z_s - r_T\, S\Phi\right)/r & r\left(C\varphi\, C\varphi_{DT} + C\Theta\, S\varphi\, S\varphi_{DT}\right) & y_s\, S\varphi_{DT} \end{bmatrix} \begin{bmatrix} \dot{r} \\ \dot{\varphi} \\ \dot{\theta} \end{bmatrix} \qquad (241)^*$$

and

$$\dot{r} = -w \qquad (242)$$

STEP can process data from up to five station simultaneously or separately. The error model in equation (239) represents Station 1. In addition to estimating the coefficients C_i in equation (239), the location of the station φ_T, Θ_T, and h_{OT} can can be estimated. The error coefficients for the five stations are presented in table 11. The error coefficients used in this section correspond to Station 1; however, the equations apply to the other four stations by merely replacing the numbers of the C_i to correspond to the proper station.

TABLE 11.- RADAR TRACKING ERROR COEFFICIENTS

Station	1	2	3	4	5
Range	C_{76}	C_{91}	C_{106}	C_{121}	C_{136}
Gain	C_{79}	C_{94}	C_{109}	C_{124}	C_{139}
Bias	C_{82}	C_{97}	C_{112}	C_{127}	C_{142}
Rate gain	C_{85}	C_{100}	C_{115}	C_{130}	C_{145}
Refraction					
Azimuth					
Gain	C_{77}	C_{92}	C_{107}	C_{122}	C_{137}
Bias	C_{80}	C_{95}	C_{110}	C_{125}	C_{140}
Rate gain	C_{83}	C_{98}	C_{113}	C_{128}	C_{143}
Elevation					
Gain	C_{78}	C_{93}	C_{108}	C_{123}	C_{138}
Bias	C_{81}	C_{96}	C_{111}	C_{126}	C_{141}
Rate gain	C_{84}	C_{99}	C_{114}	C_{129}	C_{144}
Refraction	C_{86}	C_{101}	C_{116}	C_{131}	C_{146}
Location					
Latitude, φ_T	C_{88}	C_{103}	C_{118}	C_{133}	C_{148}
Longitude, Θ_T	C_{89}	C_{104}	C_{119}	C_{134}	C_{149}
Altitude, h_{OT}	C_{90}	C_{105}	C_{120}	C_{135}	C_{150}

*Sine and cosine are abbreviated S and C.

2. Coefficients of linear equations.- The elements of matrices G and H in equation (51) are the partial derivative of R_M, A_M, and E_M with respect to the state and measurement parameters

$$
\begin{bmatrix}
\partial R_M/\partial u & \partial A_M/\partial u & \partial E_M/\partial u \\
\partial R_M/\partial u & \partial A_M/\partial v & \partial E_M/\partial u \\
\partial R_M/\partial w & \partial A_M/\partial w & \partial E_M/\partial w \\
\partial R_M/\partial h & \partial A_M/\partial h & \partial E_M/\partial h \\
\partial R_M/\partial \varphi & \partial A_M/\partial \varphi & \partial E_M/\partial \varphi \\
\partial R_M/\partial \theta & \partial A_M/\partial \theta & \partial E_M/\partial \theta
\end{bmatrix} =
$$

$$
\begin{bmatrix}
C & 0 & 0 & \partial \dot{R}_c/\partial u & \partial \dot{A}_c/\partial u & \partial \dot{E}_c/\partial u \\
0 & 0 & 0 & \partial \dot{R}_c/\partial v & \partial \dot{A}_c/\partial v & \partial \dot{E}_c/\partial v \\
0 & 0 & 0 & \partial \dot{R}_c/\partial w & \partial \dot{A}_c/\partial w & \partial \dot{E}_c/\partial w \\
\partial R_c/\partial h & \partial A_c/\partial h & \partial E_c/\partial h & \partial \dot{R}_c/\partial h & \partial \dot{A}_c/\partial h & \partial \dot{E}_c/\partial h \\
\partial R_c/\partial \varphi & \partial A_c/\partial \varphi & \partial E_c/\partial \varphi & \partial \dot{R}_c/\partial \varphi & \partial \dot{A}_c/\partial \varphi & \partial \dot{E}_c/\partial \varphi \\
\partial R_c/\partial \theta & \partial A_c/\partial \theta & \partial E_c/\partial \theta & \partial \dot{R}_c/\partial \theta & \partial \dot{A}_c/\partial \theta & \partial \dot{E}_c/\partial \theta
\end{bmatrix}
\begin{bmatrix}
C_{76} & 0 & 0 \\
0 & C_{77} & 0 \\
-C_{85}\dfrac{\cos E_c}{\sin^2 E_c} & 0 & \left(C_{78} - C_{86}\csc^2 E_c\right) \\
C_{82} & 0 & 0 \\
0 & C_{83} & 0 \\
0 & 0 & C_{84}
\end{bmatrix}
\tag{243}
$$

where

$$
\begin{bmatrix}
\partial R_c/\partial h & \partial A_c/\partial h & \partial E_c/\partial h \\
\partial R_c/\partial \varphi & \partial A_c/\partial \varphi & \partial E_c/\partial \varphi \\
\partial R_c/\partial \theta & \partial A_c/\partial \theta & \partial E_c/\partial \theta
\end{bmatrix}
=
\begin{bmatrix}
\partial x_s/\partial h & \partial y_s/\partial h & \partial z_s/\partial h & \partial R_c/\partial h \\
\partial x_s/\partial \varphi & \partial y_s/\partial \varphi & \partial z_s/\partial \varphi & \partial R_c/\partial \varphi \\
\partial x_s/\partial \theta & \partial y_s/\partial \theta & \partial z_s/\partial \theta & \partial R_c/\partial \theta
\end{bmatrix}
\begin{bmatrix}
x_s/R_c & 0 & 1/\sqrt{y_s^2 + z_s^2} \\
y_s/R_c & z_s/\left(y_s^2 + z_s^2\right) & 0 \\
z_s/R_c & -y_s/\left(y_s^2 + z_s^2\right) & 0 \\
0 & 0 & -\sin E_c/\sqrt{y_s^2 + z_s^2}
\end{bmatrix}
\tag{244}
$$

$$
\begin{bmatrix}
\partial\dot{R}_c/\partial u & \partial\dot{A}_c/\partial u & \partial\dot{E}_c/\partial u \\
\partial\dot{R}_c/\partial v & \partial\dot{A}_c/\partial v & \partial\dot{E}_c/\partial v \\
\partial\dot{R}_c/\partial w & \partial\dot{A}_c/\partial w & \partial\dot{E}_c/\partial w \\
\partial\dot{R}_c/\partial h & \partial\dot{A}_c/\partial h & \partial\dot{E}_c/\partial h \\
\partial\dot{R}_c/\partial \varphi & \partial\dot{A}_c/\partial \varphi & \partial\dot{E}_c/\partial \varphi \\
\partial\dot{R}_c/\partial \theta & \partial\dot{A}_c/\partial \theta & \partial\dot{E}_c/\partial \theta
\end{bmatrix}
=
\begin{bmatrix}
\partial\dot{x}_s/\partial u & \partial\dot{y}_s/\partial u & \partial\dot{z}_s/\partial u & \partial\dot{R}_c/\partial u & 0 & 0 & 0 & 0 \\
\partial\dot{x}_s/\partial v & \partial\dot{y}_s/\partial v & \partial\dot{z}_s/\partial v & \partial\dot{R}_c/\partial v & 0 & 0 & 0 & 0 \\
\partial\dot{x}_s/\partial w & \partial\dot{y}_s/\partial w & \partial\dot{z}_s/\partial w & \partial\dot{R}_c/\partial w & 0 & 0 & 0 & 0 \\
\partial\dot{x}_s/\partial h & \partial\dot{y}_s/\partial h & \partial\dot{z}_s/\partial h & \partial\dot{R}_c/\partial h & \partial x_s/\partial h & \partial y_s/\partial h & \partial z_s/\partial h & \partial R_c/\partial h \\
\partial\dot{x}_s/\partial \varphi & \partial\dot{y}_s/\partial \varphi & \partial\dot{z}_s/\partial \varphi & \partial\dot{R}_c/\partial \varphi & \partial x_s/\partial \varphi & \partial y_s/\partial \varphi & \partial z_s/\partial \varphi & \partial R_c/\partial \varphi \\
\partial\dot{x}_s/\partial \theta & \partial\dot{y}_s/\partial \theta & \partial\dot{z}_s/\partial \theta & \partial\dot{R}_c/\partial \theta & \partial x_s/\partial \theta & \partial y_s/\partial \theta & \partial z_s/\partial \theta & \partial R_c/\partial \theta
\end{bmatrix}
$$

$$
\begin{bmatrix}
x_s/R_c & 0 & 1\Big/\sqrt{y_s^2 + z_s^2} \\
y_s/R_c & z_s/\left(y_s^2 + z_s^2\right) & 0 \\
z_s/R_c & -y_s/\left(y_s^2 + z_s^2\right) & 0 \\
0 & 0 & -x_s/R_c\sqrt{y_s^2 + z_s^2} \\
\dot{x}_s/R_c & 0 & -\dot{R}_c/R_c\sqrt{y_s^2 + z_s^2} \\
\dot{y}_s/R_c & -\left(\dot{z}_s + 2\,\dot{A}_c\,y_s\right)\Big/\left(y_s^2 + z_s^2\right) & -\dot{E}_c\,y_s\Big/\left(R_c\sqrt{y_s^2 + z_s^2}\cos E_c\right) \\
\dot{z}_s/R_c & \left(\dot{y}_s - 2\,\dot{A}_c\,z_s\right)\Big/\left(y_s^2 + z_s^2\right) & -\dot{E}_c\,z_s\Big/\left(R_c\sqrt{y_s^2 + z_s^2}\cos E_c\right) \\
-\dot{R}_c/R_c & 0 & \dot{x}_s/R_c\sqrt{y_s^2 + z_s^2} - \dot{E}_c/R_c
\end{bmatrix}
\tag{245}
$$

$$
\begin{bmatrix}
\partial x_s/\partial h & \partial y_s/\partial h & \partial z_s/\partial h \\
\partial x_s/\partial \varphi & \partial y_s/\partial \varphi & \partial z_s/\partial \varphi \\
\partial x_s/\partial \theta & \partial y_s/\partial \theta & \partial z_s/\partial \theta
\end{bmatrix}
=
$$

$$
\begin{bmatrix}
\left(x_s + r_T\cos\Phi\right)/r & y_s/r & \left(z_s - r_T\sin\Phi\right)/r \\
r\left(\cos\varphi\sin\varphi_{DT} - \cos\Theta\sin\varphi\cos\varphi_{DT}\right) & -r\sin\Theta\sin\varphi & r\left(\cos\varphi\cos\varphi_{DT} + \cos\Theta\cos\varphi\sin\varphi_{DT}\right) \\
-y_s\cos\varphi_{DT} & r\cos\Theta\cos\varphi & y_s\sin\varphi_{DT}
\end{bmatrix}
\tag{246}
$$

$$
\begin{bmatrix}
\partial\dot{x}_s/\partial u \\
\partial\dot{x}_s/\partial v \\
\partial\dot{x}_s/\partial w \\
\partial\dot{x}_s/\partial h \\
\partial\dot{x}_s/\partial \varphi \\
\partial\dot{x}_s/\partial \theta
\end{bmatrix}
=
\begin{bmatrix}
0 & \partial\dot{\varphi}/\partial u & 0 \\
0 & 0 & \partial\dot{\theta}/\partial v \\
-1 & 0 & 0 \\
0 & \partial\dot{\varphi}/\partial h + \dot{\varphi}/r & \partial\dot{\theta}/\partial h + \dot{\theta}/r \\
-r\dot{\varphi} & \dot{r}/r & \partial\dot{\theta}/\partial \varphi - \tan\varphi\,\dot{\varphi} \\
0 & 0 & \dot{r}/r + \cot\Theta\,\dot{\theta} - \tan\varphi\,\dot{\varphi}
\end{bmatrix}
\begin{bmatrix}
\partial x_s/\partial h \\
\partial x_s/\partial \varphi \\
\partial x_s/\partial \theta
\end{bmatrix}
\tag{247a}
$$

$$\begin{bmatrix} \partial\dot{y}_s/\partial u \\ \partial\dot{y}_s/\partial v \\ \partial\dot{y}_s/\partial w \\ \partial\dot{y}_s/\partial h \\ \partial\dot{y}_s/\partial\varphi \\ \partial\dot{y}_s/\partial\theta \end{bmatrix} = \begin{bmatrix} 0 & \partial\dot{\varphi}/\partial u & 0 \\ 0 & 0 & \partial\dot{\theta}/\partial v \\ -1 & 0 & 0 \\ 0 & \partial\dot{\varphi}/\partial h + \dot{\varphi}/r & \partial\dot{\theta}/\partial h + \dot{\theta}/r \\ -r\dot{\varphi} & \dot{r}/r & \partial\dot{\theta}/\partial\varphi - \tan\varphi\,\dot{\theta} \\ 0 & 0 & \dot{r}/r - \tan\Theta\,\dot{\theta} - \tan\varphi\,\dot{\varphi} \end{bmatrix} \begin{bmatrix} \partial y_s/\partial h \\ \partial y_s/\partial\varphi \\ \partial y_s/\partial\theta \end{bmatrix} \tag{247b}$$

$$\begin{bmatrix} \partial\dot{z}_s/\partial u \\ \partial\dot{z}_s/\partial v \\ \partial\dot{z}_s/\partial w \\ \partial\dot{z}_s/\partial h \\ \partial\dot{z}_s/\partial\varphi \\ \partial\dot{z}_s/\partial\theta \end{bmatrix} = \begin{bmatrix} 0 & \partial\dot{\varphi}/\partial h & 0 \\ 0 & 0 & \partial\dot{\theta}/\partial v \\ -1 & 0 & 0 \\ 0 & \partial\dot{\varphi}/\partial h + \dot{\varphi}/r & \partial\dot{\theta}/\partial h + \dot{\theta}/r \\ -r\dot{\varphi} & \dot{r}/r & \partial\dot{\theta}/\partial\varphi + \tan\varphi\,\dot{\theta} \\ 0 & 0 & \dot{r}/r + \cot\Theta\,\dot{\theta} - \tan\varphi\,\dot{\varphi} \end{bmatrix} \begin{bmatrix} \partial z_s/\partial h \\ \partial z_s/\partial\varphi \\ \partial z_s/\partial\theta \end{bmatrix} \tag{247c}$$

The partial derivatives of R_M, A_M, and E_M with respect to error coefficients C_{76}, ..., C_{86} are

$$\begin{bmatrix} \partial R_M/\partial C_{76} & \partial A_M/\partial C_{77} & \partial E_M/\partial C_{78} \\ \partial R_M/\partial C_{79} & \partial A_M/\partial C_{80} & \partial E_M/\partial C_{81} \\ \partial R_M/\partial C_{82} & \partial A_M/\partial C_{83} & \partial E_M/\partial C_{84} \\ \partial R_M/\partial C_{85} & -- & \partial E_M/\partial C_{86} \end{bmatrix} = \begin{bmatrix} R_c & A_c & E_c \\ 1 & 1 & 1 \\ \dot{R}_c & \dot{A}_c & \dot{E}_c \\ \csc E_c & -- & \operatorname{ctn} E_c \end{bmatrix} \tag{248}$$

Partials with respect to station location C_{88}, C_{89}, and C_{90} are

$$\frac{\partial}{\partial C_i}\left[R_M \; A_M \; E_M\right] =$$

$$\frac{\partial}{\partial C_i}\left[R_c \; A_c \; E_c \; \dot{R}_c \; \dot{A}_c \; \dot{E}_c\right] \begin{bmatrix} C_{76} & 0 & 0 \\ 0 & C_{77} & 0 \\ -C_{85}\dfrac{\cos E_c}{\sin^2 E_c} & 0 & C_{78} - C_{86}\csc^2 E_c \\ C_{82} & 0 & 0 \\ 0 & C_{83} & 0 \\ 0 & 0 & C_{84} \end{bmatrix} \tag{249}$$

where

$$\frac{\partial}{\partial C_i}\left[R_c \; A_c \; E_c\right] =$$

$$\frac{\partial}{\partial C_i}\left[x_s \; y_s \; z_s \; R_c\right] \begin{bmatrix} x_s/R_c & 0 & 1\Big/\sqrt{y_s^2 + z_s^2} \\ y_s/R_c & z_s\Big/\left(y_s^2 + z_s^2\right) & 0 \\ z_s/R_c & -y_s\Big/\left(y_s^2 + z_s^2\right) & 0 \\ 0 & 0 & -\sin E_c\Big/\sqrt{y_s^2 + z_s^2} \end{bmatrix} \tag{250}$$

$$\frac{\partial}{\partial C_i}\left[\dot{R}_c\right] = \frac{1}{R_c}\frac{\partial}{\partial C_i}\left[\dot{x}_s \; \dot{y}_s \; \dot{z}_s \; x_s \; y_s \; z_s \; R_c\right] \begin{bmatrix} x_s \\ y_s \\ z_s \\ \dot{x}_s \\ \dot{y}_s \\ \dot{z}_s \\ -\dot{R}_c \end{bmatrix} \tag{251a}$$

$$\frac{\partial}{\partial C_i}\left[\dot{A}_c\right] = \frac{1}{\left(y_s^2 + z_s^2\right)} \frac{\partial}{\partial C_i} \left[\dot{y}_s \;\; \dot{z}_s \;\; y_s \;\; z_s\right] \begin{bmatrix} z_s \\ -y_s \\ -\dot{z}_s - 2\,\dot{A}_c\, y_s \\ \dot{y}_s - 2\,\dot{A}_c\, z_s \end{bmatrix} \tag{251b}$$

$$\frac{\partial}{\partial C_i}\left[\dot{E}_c\right] = \frac{1}{R_c\sqrt{y_s^2 + z_s^2}} \frac{\partial}{\partial C_i} \left[\dot{x}_s \;\; \dot{R}_c \;\; x_s \;\; y_s \;\; z_s \;\; R_c\right] \begin{bmatrix} R_c \\ -x_s \\ -\dot{R}_c \\ -\dot{E}_c\, y_s/\cos E_c \\ -\dot{E}_c\, z_s/\cos E_c \\ \dot{x}_s - \dot{E}_c\sqrt{y_s^2 + z_s^2} \end{bmatrix} \tag{251c}$$

$$\begin{bmatrix} \partial x_s/\partial C_{88} & \partial x_s/\partial C_{89} & \partial x_s/\partial C_{90} \\ \partial y_s/\partial C_{88} & \partial y_s/\partial C_{89} & \partial y_s/\partial C_{90} \\ \partial z_s/\partial C_{88} & \partial z_s/\partial C_{89} & \partial z_s/\partial C_{90} \end{bmatrix} =$$

$$\begin{bmatrix} \left(z_s \dfrac{d\varphi_{DT}}{dC_{88}} - r_T \sin\Phi - \dfrac{\partial r_T}{\partial C_{88}} \cos\Phi\right) & \left(-\dfrac{\partial x_s}{\partial \theta}\right) & \left(-\cos\Phi\right) \\ 0 & \left(-\dfrac{\partial y_s}{\partial \theta}\right) & 0 \\ \left(-x_s \dfrac{d\varphi_{DT}}{dC_{88}} - r_T \cos\Phi + \dfrac{\partial r_T}{\partial C_{88}} \sin\Phi\right) & \left(-\dfrac{\partial z_s}{\partial \theta}\right) & \left(\sin\Phi\right) \end{bmatrix} \tag{252}$$

$$\begin{bmatrix} \partial\dot{x}_s/\partial C_{88} \\ \partial\dot{y}_s/\partial C_{88} \\ \partial\dot{z}_s/\partial C_{88} \end{bmatrix} =$$

$$\frac{\dot{r}}{r}\begin{bmatrix} \partial x_s/\partial C_{88} + \partial r_T/\partial C_{88}\cos\Phi - r_T\sin\Phi\left(\frac{d\varphi_{DT}}{dC_{88}} - 1\right) \\ 0 \\ \partial z_s/\partial C_{88} - \partial r_T/\partial C_{88}\sin\Phi - r_T\cos\Phi\left(\frac{d\varphi_{DT}}{dC_{88}} - 1\right) \end{bmatrix} + \frac{d\varphi_{DT}}{dC_{88}}\begin{bmatrix} \frac{\partial z_s}{\partial\varphi}\dot{\varphi} + y_s\sin\varphi_{DT}\,\dot{\theta} \\ 0 \\ -\frac{\partial x_s}{\partial\varphi}\dot{\varphi} + y_s\cos\varphi_{DT}\,\dot{\theta} \end{bmatrix} \tag{253a}$$

$$\begin{bmatrix} \partial x_s/\partial C_{89} \\ \partial y_s/\partial C_{89} \\ \partial z_s/\partial C_{89} \end{bmatrix} = \frac{\dot{r}}{r}\begin{bmatrix} \partial x_s/\partial C_{89} \\ \partial y_s/\partial C_{89} \\ \partial z_s/\partial C_{89} \end{bmatrix} +$$

$$r\begin{bmatrix} (\cos\Theta\cos\varphi\,\dot{\theta} - \sin\Theta\sin\varphi\,\dot{\varphi})\cos\varphi_{DT} \\ \sin\Theta\cos\varphi\,\dot{\theta} + \cos\Theta\sin\varphi\,\dot{\varphi} \\ (-\cos\Theta\cos\varphi\,\dot{\theta} + \sin\Theta\sin\varphi\,\dot{\varphi})\sin\varphi_{DT} \end{bmatrix} \tag{253b}$$

$$\begin{bmatrix} \partial\dot{x}_s/\partial C_{90} \\ \partial\dot{y}_s/\partial C_{90} \\ \partial\dot{z}_s/\partial C_{90} \end{bmatrix} = \frac{\dot{r}}{r}\begin{bmatrix} \partial x_s/\partial C_{90} + \cos\Phi \\ 0 \\ \partial z_s/\partial C_{90} - \sin\Phi \end{bmatrix} = \begin{bmatrix} 0 \\ 0 \\ 0 \end{bmatrix} \tag{253c}$$

where

$$\frac{\partial\varphi_{DT}}{\partial C_{88}} = \left(\frac{R_E}{R_P}\right)^2 \frac{\cos^2\varphi_{DT}}{\cos^2\varphi_T} \tag{254}$$

$$\frac{\partial r_T}{\partial C_{88}} = -\frac{R_{OT}^{\ 3}}{R_E^{\ 2}}\left[\left(\frac{R_E}{R_P}\right)^2 - 1\right]\sin\varphi_T\cos\varphi_T \tag{255}$$

B. Accelerometers (STEP1)

1. Nonlinear equations.- The linear accelerations acting at the vehicle center of gravity in the body axes directions are presented in equation (134). Using C_A, C_Y, and C_N because the other forms of aerodynamic input can be transformed to C_A, C_Y, and C_N, we have

$$\begin{bmatrix} a_{XB} \\ a_{YB} \\ a_{ZB} \end{bmatrix} = \frac{qS}{m}\begin{bmatrix} -C_A \\ C_Y \\ -C_N \end{bmatrix} \tag{256}$$

Transforming these equations to the location of the inertial measuring unit (accelerometers), we get equation (158), which is

$$\begin{bmatrix} a_{XP} \\ a_{YP} \\ a_{ZP} \end{bmatrix} = \begin{bmatrix} a_{XB} \\ a_{YB} \\ a_{ZB} \end{bmatrix} + \begin{bmatrix} -(Q^2 + R^2) & PQ - \dot{R} & PR + \dot{Q} \\ PQ + \dot{R} & -(P^2 + R^2) & QR - \dot{P} \\ PR - \dot{Q} & QR + \dot{P} & -(P^2 + Q^2) \end{bmatrix}\begin{bmatrix} x_p \\ y_p \\ z_p \end{bmatrix} \tag{257}$$

These accelerations will not agree with the measured accelerations because of instrument misalignment, biases, and scale-factor errors. In an attempt to account for these anomolies, the error model of equation (159) is used as follows

$$\begin{bmatrix} a_{XM} \\ a_{YM} \\ a_{ZM} \end{bmatrix} = \begin{bmatrix} C_{61} & C_{62} & C_{63} \\ C_{64} & C_{65} & C_{66} \\ C_{67} & C_{68} & C_{69} \end{bmatrix}^{-1}\left\{\begin{bmatrix} a_{xp} \\ a_{yp} \\ a_{zp} \end{bmatrix} - \begin{bmatrix} C_{70} \\ C_{71} \\ C_{72} \end{bmatrix}\right\} \tag{258}$$

2. Coefficients of linear equations.- The elements of the matrices G and H in equations (51) are the partial derivatives of a_{XM}, a_{YM}, and a_{ZM} with respect to the state variables and model parameters. The partials of the state variables are

$$\frac{\partial}{\partial \zeta}\begin{bmatrix} a_{XM} \\ a_{YM} \\ a_{ZM} \end{bmatrix} = \begin{bmatrix} C_{61} & C_{62} & C_{63} \\ C_{64} & C_{65} & C_{66} \\ C_{67} & C_{68} & C_{69} \end{bmatrix}^{-1} \frac{\partial}{\partial \zeta}\begin{bmatrix} a_{XP} \\ a_{YP} \\ a_{ZP} \end{bmatrix} \tag{259}$$

$$\zeta = u,\ v,\ w,\ h,\ \varphi,\ \Theta,\ e_0,\ e_1,\ e_2,\ e_3$$

where

$$\frac{\partial}{\partial \zeta}\begin{bmatrix} a_{XP} \\ a_{YP} \\ a_{ZP} \end{bmatrix} = \frac{\partial}{\partial \zeta}\begin{bmatrix} a_{XB} \\ a_{YB} \\ a_{ZB} \end{bmatrix} +$$

$$\begin{bmatrix} (Qy_p + Rz_p) & -(2Qx_p - Py_p) & -(2Rx_p - Pz_p) \\ (Qx_p - 2Py_p) & (Px_p + Rz_p) & -(2Ry_p - Qz_p) \\ (Rx_p - 2Py_p) & (Ry_p - 2Qz_p) & (Px_p + Qy_p) \end{bmatrix} \frac{\partial}{\partial \zeta}\begin{bmatrix} P \\ Q \\ R \end{bmatrix} \tag{260}$$

and

$$\frac{\partial}{\partial \zeta}\begin{bmatrix} a_{XB} \\ a_{YB} \\ a_{ZB} \end{bmatrix} = \frac{1}{q}\frac{\partial q}{\partial \zeta}\begin{bmatrix} a_{XB} \\ a_{YB} \\ a_{ZB} \end{bmatrix} + \frac{qs}{m}\frac{\partial}{\partial \zeta}\begin{bmatrix} -C_A \\ C_Y \\ -C_N \end{bmatrix} + 0\left\{\begin{matrix}\text{Negligible} \\ \text{terms involving} \\ \dot{P},\ \dot{Q},\ \dot{R}\end{matrix}\right\} \tag{261}$$

The partials of q and C_A, C_Y, and C_N in equation (261) are given in equations (185) and (186), respectively. The partials of P, Q, and R are given in equation (188). Inspection of equations (260) and (188) discloses that $\partial[P, Q, R]/\partial\zeta$ are required to calculate $\partial\left[a_{XP}, a_{YP}, a_{ZP}\right]/\partial\zeta$. However, $\partial\left[a_{XP}, a_{YP}, a_{ZP}\right]/\partial\zeta$ are necessary to determine $\partial[P, Q, R]/\partial\zeta$. Thus, an iterative procedure must be used to solve equations (260) and (188).

The partial derivatives of a_{XB}, a_{YB}, and a_{ZB} with respect to error coefficients C_1 thru C_{27} are as given in equations (195) thru (202). Partials of a_{XP}, a_{YP}, and a_{ZP} with respect

to center-of-gravity error coefficients C_{31} thru C_{33} are given in equation (205). Partials of a_{XP}, a_{YP}, and a_{ZP} with respect to inertial angular rate error parameters C_{36} thru C_{57} can be calculated from equation (260) with the partials of a_{XB}, a_{YB}, and a_{ZB} being zero, and the partials of P, Q, and R are given by equation (206).

The partial derivatives of a_{XM}, a_{YM}, and a_{ZM} with respect to the acceleration error coefficients C_{61} thru C_{72} can be obtained by differentiating equation (258) yielding

$$\frac{\partial}{\partial C_i}\begin{bmatrix} a_{XM} \\ a_{YM} \\ a_{ZM} \end{bmatrix} = \frac{\partial}{\partial C_i}\begin{bmatrix} C_{61} & C_{62} & C_{63} \\ C_{64} & C_{65} & C_{66} \\ C_{67} & C_{68} & C_{69} \end{bmatrix}^{-1} \left\{ \begin{bmatrix} a_{XP} \\ a_{YP} \\ a_{ZP} \end{bmatrix} - \begin{bmatrix} C_{70} \\ C_{71} \\ C_{72} \end{bmatrix} \right\} \tag{262}$$

$$\text{for } C_i = C_{61} \ldots C_{69}$$

and

$$\frac{\partial}{\partial C_i}\begin{bmatrix} a_{XM} \\ a_{YM} \\ a_{ZM} \end{bmatrix} = -\begin{bmatrix} C_{61} & C_{62} & C_{63} \\ C_{64} & C_{65} & C_{66} \\ C_{67} & C_{68} & C_{69} \end{bmatrix}^{-1} \frac{\partial}{\partial C_i}\begin{bmatrix} C_{70} \\ C_{71} \\ C_{72} \end{bmatrix} \tag{263}$$

$$\text{for } C_i = C_{70},\ C_{71},\ C_{72}$$

The partial derivatives of C_{61} thru C_{69} can be obtained as follows: Denote elements of the matrix adjoint to the coefficient matrix as follows

$$\begin{bmatrix} \omega_{11} & \omega_{12} & \omega_{13} \\ \omega_{21} & \omega_{22} & \omega_{23} \\ \omega_{31} & \omega_{32} & \omega_{33} \end{bmatrix} =$$

$$\begin{bmatrix} (C_{65}\ C_{69} - C_{66}\ C_{68}) & -(C_{62}\ C_{69} - C_{63}\ C_{68}) & (C_{62}\ C_{66} - C_{63}\ C_{65}) \\ -(C_{64}\ C_{69} - C_{66}\ C_{67}) & (C_{61}\ C_{69} - C_{63}\ C_{67}) & -(C_{61}\ C_{66} - C_{63}\ C_{64}) \\ (C_{64}\ C_{68} - C_{65}\ C_{67}) & -(C_{61}\ C_{68} - C_{62}\ C_{67}) & (C_{61}\ C_{65} - C_{62}\ C_{64}) \end{bmatrix} \quad (264)$$

Then the determinant of the coefficient matrix is

$$D = C_{61}\ \omega_{11} + C_{62}\ \omega_{21} + C_{63}\ \omega_{31} \quad (265)$$

and the inverse is

$$[C]^{-1} = \begin{bmatrix} C_{61} & C_{62} & C_{63} \\ C_{64} & C_{65} & C_{66} \\ C_{67} & C_{68} & C_{69} \end{bmatrix}^{-1} = \frac{1}{D} \begin{bmatrix} \omega_{11} & \omega_{12} & \omega_{13} \\ \omega_{21} & \omega_{22} & \omega_{23} \\ \omega_{31} & \omega_{32} & \omega_{33} \end{bmatrix} \quad (266)$$

The partial derivatives of the inverse matrix required in equation (262) are given below.

$$\frac{\partial}{\partial C_{60+j}} [C]^{-1} = -\frac{1}{D} \begin{bmatrix} (\omega_{11}\ \omega_{j1}) & (\omega_{11}\ \omega_{j2}) & (\omega_{11}\ \omega_{j3}) \\ (\omega_{21}\ \omega_{j1}) & (\omega_{21}\ \omega_{j2}) & (\omega_{21}\ \omega_{j3}) \\ (\omega_{31}\ \omega_{j1}) & (\omega_{31}\ \omega_{j2}) & (\omega_{31}\ \omega_{j3}) \end{bmatrix} \quad (267a)$$

$$\frac{\partial}{\partial C_{63+j}} [C]^{-1} = -\frac{1}{D} \begin{bmatrix} (\omega_{12}\ \omega_{j1}) & (\omega_{12}\ \omega_{j2}) & (\omega_{12}\ \omega_{j3}) \\ (\omega_{22}\ \omega_{j1}) & (\omega_{22}\ \omega_{j2}) & (\omega_{22}\ \omega_{j3}) \\ (\omega_{32}\ \omega_{j1}) & (\omega_{32}\ \omega_{j2}) & (\omega_{32}\ \omega_{j3}) \end{bmatrix} \quad (267b)$$

$$\frac{\partial}{\partial C_{66+j}} [C]^{-1} = -\frac{1}{D} \begin{bmatrix} (\omega_{13}\ \omega_{j1}) & (\omega_{13}\ \omega_{j2}) & (\omega_{13}\ \omega_{j3}) \\ (\omega_{23}\ \omega_{j1}) & (\omega_{23}\ \omega_{j2}) & (\omega_{23}\ \omega_{j3}) \\ (\omega_{33}\ \omega_{j1}) & (\omega_{33}\ \omega_{j2}) & (\omega_{33}\ \omega_{j3}) \end{bmatrix} \tag{267c}$$

where $j = 1, 2,$ or 3.

The partial derivatives of C_{70}, C_{71}, and C_{72} in equation (263) are

$$\frac{\partial C_j}{\partial C_i} = \begin{cases} 1 \text{ if } i = j \\ 0 \text{ if } i \neq j \end{cases} \tag{268}$$

C. Airborne Radar

Two types of airborne radars can be processed in the STEP. The first assumes the radar transmits an omnidirectional signal. The first return from the planet surface yields the shortest distance from the vehicle to the surface and, hence, is a measure of altitude. Such altitude measurements can be processed as described in Section D, which follows.

1. Nonlinear equations.- The second type of airborne radar, and the type concerned herein, assumes that a radar is oriented by a pitch angle δ_P and yaw angle δ_Y with respect to the body axes (see fig. 7). It is further assumed that the radar measures the slant distance, R_R, along its axis to the planet surface. This distance depends on the radar orientation, δ_P and δ_Y, the vehicle altitude, latitude, and orientation. To calculate this slant range the azimuth and pitch angles λ_R and γ_R in figure 7 that the slant range makes with the G-frame axes must be determined.

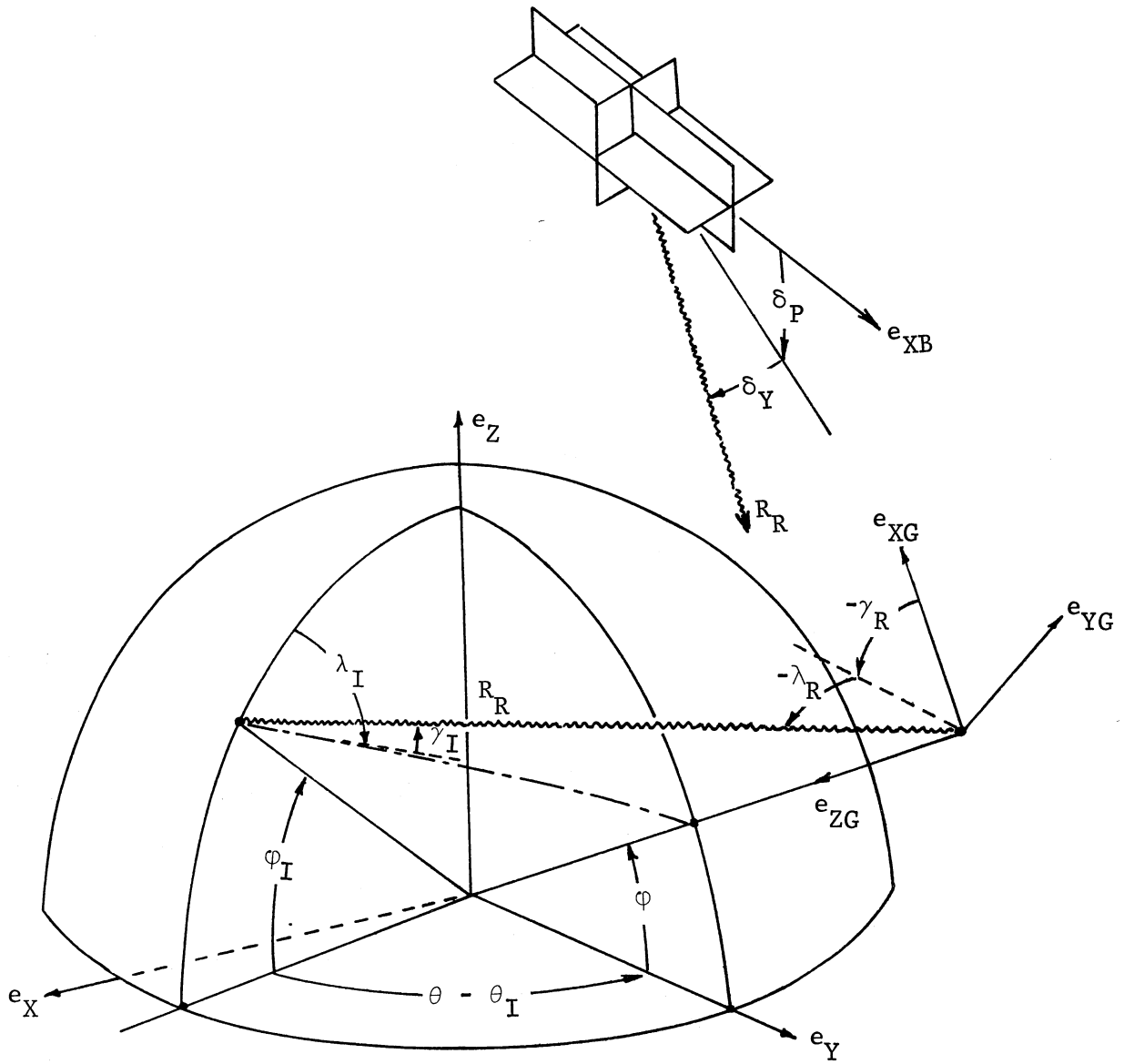

Figure 7.- Airborne Radar Schematic

Resolving components of R_R into the body axis yields

$$\begin{bmatrix} R_{XB} \\ R_{YB} \\ R_{ZB} \end{bmatrix} = R_R \begin{bmatrix} \ell_B \\ m_B \\ n_B \end{bmatrix} \quad \text{where} \quad \begin{bmatrix} \ell_B \\ m_B \\ n_B \end{bmatrix} = \begin{bmatrix} \cos\delta_P \cos\delta_Y \\ \sin\delta_Y \\ \cos\delta_P \sin\delta_Y \end{bmatrix} \tag{269}$$

Transforming these components to the G-frame yields

$$R_P \begin{bmatrix} \ell_G \\ m_G \\ n_G \end{bmatrix} = G^T R_R \begin{bmatrix} \ell_B \\ m_B \\ n_B \end{bmatrix} \tag{270}$$

The angles λ_R and γ_R are, therefore,

$$\lambda_R = \tan^{-1}\left(\frac{m_G}{\ell_G}\right) \tag{271a}$$

$$\gamma_R = \tan^{-1}\left(\frac{-n_G}{\sqrt{\ell_G{}^2 + m_G{}^2}}\right) \tag{271b}$$

Note that R_R need not be known to perform the above calculations because it cancels in the numerator and denominator of equations (271).

The position vector from the planet center to the vehicle, r, equals the slant range vector R_R plus the planet radius vector

$$r = R_R + R_{OI} \tag{272}$$

Resolving equation (272) into is scalar components along the e_X, e_Y, and e_Z axes in figure 7, we can solve the resulting equations for the slant range R_R, the longitude separation $\Theta_I = \theta - \theta_I$ and latitude at the intersection of the planet surface and the slant range vector φ_I

$$R_R = \frac{-C_2 \pm \sqrt{C_2{}^2 - 4C_1C_3}}{2C_1} \tag{273}$$

$$\Theta_I = \tan^{-1}\left(-\frac{a_1 R_R}{a_2 + a_3 R_R}\right) \tag{274}$$

$$\varphi_I = \tan^{-1}\left(\frac{a_4 + a_5 R_R}{a_2 + a_3 R_R}\right) \tag{275}$$

where

$$C_1 = a_1^2 + a_3^2 + \left(\frac{R_E}{R_P}\right)^2 a_5^2$$

$$C_2 = 2\left[a_2\ a_3 + \left(\frac{R_E}{R_P}\right)^2 a_4\ a_5\right] \tag{276}$$

$$C_2 = a_2^2 + \left(\frac{R_E}{R_P}\right)^2 a_4^2 - R_E^2$$

and

$$\begin{aligned} a_1 &= \sin\lambda_R \cos\gamma_R \\ a_2 &= r\cos\varphi \\ a_3 &= \cos\varphi \sin\gamma_R - \sin\varphi\cos\lambda_R\cos\gamma_R \\ a_4 &= r\sin\varphi \\ a_5 &= \sin\varphi\sin\gamma_R + \cos\varphi\cos\lambda_R\cos\gamma_R \end{aligned} \tag{277}$$

The incident beam intersects the surface at an angle γ_I above the local horizon and an azimuth λ_I where

$$\gamma_I = \sin^{-1}\left[\frac{R_{OI}}{R_R} - \frac{r}{R_R}\sin\varphi\sin\varphi_I + \cos\varphi\cos\varphi_I\cos\Theta_I\right] \tag{278}$$

$$\lambda_I = \sin^{-1}\left[\frac{r\cos\varphi\sin\Theta_I}{R_R\cos\gamma_I}\right] \tag{279}$$

where

$$R_{OI} = \frac{R_E}{\sqrt{1 + \left[\left(\frac{R_E}{R_P}\right)^2 - 1\right] \sin^2 \varphi_I}} \tag{280}$$

Equations (274), (275), (278), and (279) are not solved in STEP but are presented above for completeness and use in future development.

2. Coefficients of linear equations.- The partial derivatives of R_R with respect to STEP state variables are

$$\frac{\partial R_R}{\partial \zeta} = -\left[\frac{R_R}{C_1} + \frac{C_1}{C_1(2C_1R_R + C_2)}\right]\frac{\partial C_1}{\partial \zeta} - \left[\frac{1}{2C_1} - \frac{C_2}{2C_1(2C_1R_R + C_2)}\right]\frac{\partial C_2}{\partial \zeta} - \left[\frac{1}{(2C_1R_R + C_2)}\right]\frac{\partial C_3}{\partial \zeta}$$

$$\zeta = h, \varphi, \theta, e_0, e_1, e_2, e_3 \tag{281}$$

Partials of R_R with respect to u, v, and w are zero. Partials of C_1, C_2, and C_3 are

$$\begin{aligned}
\frac{\partial C_1}{\partial \zeta} &= 2\left[a_1 \frac{\partial a_1}{\partial \zeta} + a_3 \frac{\partial a_3}{\partial \zeta} + \left(\frac{R_E}{R_P}\right)^2 a_5 \frac{\partial a_5}{\partial \zeta}\right] \\
\frac{\partial C_2}{\partial \zeta} &= 2\left[a_2 \frac{\partial a_3}{\partial \zeta} + a_3 \frac{\partial a_2}{\partial \zeta} + \left(\frac{R_E}{R_P}\right)^2 a_4 \frac{\partial a_5}{\partial \zeta} + \left(\frac{R_E}{R_P}\right)^2 a_5 \frac{\partial a_4}{\partial \zeta}\right] \\
\frac{\partial C_3}{\partial \zeta} &= 2\left[a_2 \frac{\partial a_2}{\partial \zeta} + \left(\frac{R_E}{R_P}\right)^2 a_4 \frac{\partial a_4}{\partial \zeta}\right]
\end{aligned} \tag{282}$$

$$\zeta = h, \phi, \theta, e_0, e_1, e_2, e$$

where

$$\begin{bmatrix} \partial a_1/\partial h \\ \partial a_1\ \partial \varphi \\ \partial a_1\ \partial \theta \\ \partial a_1\ \partial e_0 \\ \partial a_1\ \partial e_1 \\ \partial a_2\ \partial e_2 \\ \partial a_3\ \partial e_3 \end{bmatrix} = \begin{bmatrix} 0 \\ 0 \\ 0 \\ -\sin\lambda_R \sin\gamma_R\ \partial\gamma_R/\partial e_0 + \cos\lambda_R \cos\gamma_R\ \partial\lambda_R/\partial e_o \\ -\sin\lambda_R \sin\gamma_R\ \partial\gamma_R/\partial e_1 + \cos\lambda_R \cos\gamma_R\ \partial\lambda_R/\partial e_1 \\ -\sin\lambda_R \sin\gamma_R\ \partial\gamma_R/\partial e_2 + \cos\lambda_R \cos\gamma_R\ \partial\lambda_R/\partial e_2 \\ -\sin\lambda_R \sin\gamma_R\ \partial\gamma_R/\partial e_3 + \cos\lambda_R \cos\gamma_R\ \partial\lambda_R/\partial e_3 \end{bmatrix} \tag{283a}$$

$$\begin{bmatrix} \partial a_2/\partial h \\ \partial a_2/\partial \varphi \\ \partial a_2/\partial \theta \\ \partial a_2/\partial e_0 \\ \partial a_2/\partial e_1 \\ \partial a_2/\partial e_2 \\ \partial a_2/\partial e_3 \end{bmatrix} = \begin{bmatrix} \cos \varphi \\ - r \sin \varphi \\ 0 \\ 0 \\ 0 \\ 0 \\ 0 \end{bmatrix} \tag{283b}$$

$$\begin{bmatrix} \partial a_3/\partial h \\ \partial a_3/\partial \varphi \\ \partial a_3/\partial \theta \\ \partial a_3/\partial e_0 \\ \partial a_3/\partial e_1 \\ \partial a_3/\partial e_2 \\ \partial a_3/\partial e_3 \end{bmatrix} =$$

$$\begin{bmatrix} 0 \\ -a_5 \\ 0 \\ (\cos \varphi \cos \gamma_R + \sin \varphi \cos \lambda_R \sin \gamma_R)\, \partial\gamma_R/\partial e_0 + a_1 \sin \varphi\, \partial\lambda_R/\partial e_0 \\ (\cos \varphi \cos \gamma_R + \sin \varphi \cos \lambda_R \sin \gamma_R)\, \partial\gamma_R/\partial e_1 + a_1 \sin \varphi\, \partial\lambda_R/\partial e_1 \\ (\cos \varphi \cos \gamma_R + \sin \varphi \cos \lambda_R \sin \gamma_R)\, \partial\gamma_R/\partial e_2 + a_1 \sin \varphi\, \partial\lambda_R/\partial e_2 \\ (\cos \varphi \cos \gamma_R + \sin \varphi \cos \lambda_R \sin \gamma_R)\, \partial\gamma_R/\partial e_3 + a_1 \sin \varphi\, \partial\lambda_R/\partial e_3 \end{bmatrix} \tag{283c}$$

$$\begin{bmatrix} \partial a_4/\partial h \\ \partial a_4/\partial \varphi \\ \partial a_4/\partial \theta \\ \partial a_4/\partial e_0 \\ \partial a_4/\partial e_1 \\ \partial a_4/\partial e_2 \\ \partial a_4/\partial e_3 \end{bmatrix} = \begin{bmatrix} \sin \varphi \\ r \cos \varphi \\ 0 \\ 0 \\ 0 \\ 0 \\ 0 \end{bmatrix} \tag{283d}$$

$$\begin{bmatrix} \partial a_5/\partial h \\ \partial a_5/\partial \varphi \\ \partial a_5/\partial \theta \\ \partial a_5/\partial e_0 \\ \partial a_5/\partial e_1 \\ \partial a_5/\partial e_2 \\ \partial a_5/\partial e_3 \end{bmatrix} =$$

$$\begin{bmatrix} 0 \\ a_3 \\ 0 \\ (\sin \varphi \cos \gamma_R - \cos \varphi \cos \lambda_R \sin \gamma_R)\, \partial \gamma_R/\partial e_0 - a_1 \cos \varphi\, \partial \lambda_R/\partial e_0 \\ (\sin \varphi \cos \gamma_R - \cos \varphi \cos \lambda_R \sin \gamma_R)\, \partial \gamma_R/\partial e_1 - a_1 \cos \varphi\, \partial \lambda_R/\partial e_1 \\ (\sin \varphi \cos \gamma_R - \cos \varphi \cos \lambda_R \sin \gamma_R)\, \partial \gamma_R/\partial e_2 - a_1 \cos \varphi\, \partial \lambda_R/\partial e_2 \\ (\sin \varphi \cos \gamma_R - \cos \varphi \cos \lambda_R \sin \gamma_R)\, \partial \gamma_R/\partial e_3 - a_1 \cos \varphi\, \partial \lambda_R\, \partial e_3 \end{bmatrix} \tag{283e}$$

and

$$\frac{\partial \lambda_R}{\partial \zeta} = \frac{1}{\left(\ell_G{}^2 + m_G{}^2\right)} \left[\ell_G \frac{\partial m_G}{\partial \zeta} - m_G \frac{\partial \ell_G}{\partial \zeta}\right] \tag{284}$$

$$\frac{\partial \gamma_R}{\partial \zeta} = - \sqrt{\ell_G{}^2 + m_G{}^2} \; \frac{\partial n_G}{\partial \zeta} - \tan \gamma_R \left(\ell_G \frac{\partial \ell_G}{\partial \zeta} + m_G \frac{\partial m_G}{\partial \zeta}\right) \tag{285}$$

with

$$\begin{bmatrix} \partial \ell_G/\partial e_0 \\ \partial \ell_G/\partial e_1 \\ \partial \ell_G/\partial e_2 \\ \partial \ell_G/\partial e_3 \end{bmatrix} = 2 \begin{bmatrix} e_0 & -e_3 & e_2 \\ e_1 & e_2 & e_3 \\ -e_2 & e_1 & e_0 \\ -e_3 & -e_0 & e_1 \end{bmatrix} \begin{bmatrix} \ell_B \\ m_B \\ n_B \end{bmatrix} \tag{286a}$$

$$\begin{bmatrix} \partial m_G/\partial e_0 \\ \partial m_G/\partial e_1 \\ \partial m_G/\partial e_2 \\ \partial m_G/\partial e_3 \end{bmatrix} = 2 \begin{bmatrix} e_3 & e_0 & -e_1 \\ e_2 & -e_1 & -e_0 \\ e_1 & e_2 & e_3 \\ e_0 & -e_3 & e_2 \end{bmatrix} \begin{bmatrix} \ell_B \\ m_B \\ n_B \end{bmatrix} \tag{286b}$$

$$\begin{bmatrix} \partial n_G/\partial e_0 \\ \partial n_G/\partial e_1 \\ \partial n_G/\partial e_2 \\ \partial n_G/\partial e_3 \end{bmatrix} = 2 \begin{bmatrix} -e_2 & e_1 & e_0 \\ e_3 & e_0 & -e_1 \\ -e_0 & e_3 & -e_2 \\ e_1 & e_2 & e_3 \end{bmatrix} \begin{bmatrix} \ell_B \\ m_B \\ n_B \end{bmatrix} \tag{286c}$$

D. Position and Velocity

Occasionally, data become available during postflight analyses that do not fall into the previous categories discussed, i.e. tracking, airborne radar, accelerometer. Yet, these additional data could yield useful information to the filtering process. Examples include burnout conditions of a satellite booster as later determined from estimating the orbit of the satellite; and discrete events that occur at prespecified altitudes (triggered by barometric devices). Frequently, these additional data can be transformed to position and/or velocity. Therefore, capability to process position and velocity data has been included in STEP. Data must be specified in terms of the program state variables u, v, w, h, φ, θ. Because of the one-to-one correspondence between the data and the state variables, the nonlinear measurement equation, equation (2), is trivial and the coefficient matrix G in the linear equations, equations (4), is identity.

VIII. NUMERICAL PROCEDURES

Numerical procedures used in STEP for integrating differential equations, inverting matrices, iterating, and interpolating will now be reviewed.

A. Numerical Integration

The nonlinear as well as the linear differential equation within STEP are integrated using the following fourth-order Runge Kutta formula (ref. 24).

$$z_{i+1} = z_i + \frac{1}{6}\left[k_o + 2k_1 + 2k_2 + k_3\right] \tag{287}$$

$$\begin{aligned} k_o &= hf\left[t_i, z_i\right] \\ k_1 &= hf\left[t_i + \frac{1}{2}h, z_i + \frac{1}{2}k_o\right] \\ k_2 &= hf\left[t_i + \frac{1}{2}h, z_i + \frac{1}{2}k_1\right] \\ k_3 &= hf\left[t_i + h, z_i + k_2\right] \end{aligned} \tag{288}$$

where h is the computing interval, which remains fixed. Normally the computing interval is specified to be twice the interval of the inertial angular rate data so that all data are involved in the integration.

B. Matrix Inversion

The procedure used to invert the matrix J in equation (53e) is the Gauss-Jordan Reduction (ref. 24). In this procedure, the matrix to be inverted is augmented by the identity matrix. The elements of each row are then operated on by replacing their elements by linear combinations of their row elements with other row elements until the matrix to be inverted is diagonal and normal. The augmented matrix is then the inverse sought.

The matrix inversion involved in equations (266), wherein the inverse equals the adjoint matrix divided by the determinent is presented in reference 25.

C. Interpolation

Simple linear interpolation is used throughout STEP.

D. Iteration

For solving the iteration problems involved in STEP1, [equations (154) thru (158)], a successive substitution method described in reference 24 is used.

IX. PROGRAM APPLICATIONS AND USE

The previous sections have presented the mathematical concepts and equations in STEP. In this section, we will be concerned with how the programs are used and the types of problems that can be solved.

A. Operating Modes

STEP has three modes of operation -- deterministic, error analysis, and filtering and smoothing. The operating mode on any problem is specified by input. A description of each of these modes follows.

1. Deterministic mode.- Under this operating mode, only the nonlinear equations of motion are integrated from initial to final time. No state transition matrix, covariance matrix, nor minimum variance claculations occur. No measurement data processing occurs. The inertial angular rates (and acceleration for STEP2) are still required to integrate the equations of motion. The error models are included in the computation with the error coefficients specified by input. This mode of operation is useful in preflight simulations to determine the sensitivities of the STEP1 and STEP2 models initial conditions and model parameters. Monte Carlo-type studies can be conducted using this mode. It is also useful in postflight anlysis studies to deterministically reconstruct trajectories by integrating the inertial angular rate and accelerometer data on STEP2, or integrating the inertial angular rates in combination with specified aerodynamic force coefficients, atmospheric denisty, and mass on STEP1.

2. Error analysis mode.- In this operating mode, the equations of motion are integrated, a state transition matrix calculated, and the minimum variance equations solved with the exception of equation (53a), the state update equation. Therefore, the initially specified reference trajectory never changes and is considered to be the best estimate. The covariance and correlation matrices P, C_{uz}, and C_{vz}, however, are discontinuously updated by means of the optimal linear gain as the processing proceeds and reflects the uncertainties in state and model parameter errors. Thus, the uncertainties in state and model parameters are determined as functions of the uncertainties in the initial conditions, dynamic model and measurement equation parameters, measurement type, and trajectory geometery. Note that because

equation (53a) is not solved, no measurement data (other than those required to integrate the equations of motion) are required. Only the measurement data statistics are needed in equation (53f). This mode is useful in preflight studies to investigate the effects of trajectory accuracy and shape, data accuracy and rate, error model coefficients, and types of measurements on the accuracy of state and model parametrs to be estimated later during postflight studies. Investigations of this type are reported in references 26 thru 31.

3. Filtering and smoothing mode.- In the filtering and smoothing mode of operation, the equations of motion are integrated, the state transition matrix calculated, and the minimum variance equations are solved. This mode is only useful in postflight analysis studies to estimate state and model parameters from flight data. This mode is described in Section III.E, Computational Procedures. Several options are available in this mode.

Updated or nonupdated reference: This option, discussed in Section III.E, concerns updating or not updating the reference trajectory about which the equations are linearized and the differential corrections are made. If initial estimates of the state variables are not accurately known and/or the signal-to-noise ration of the measurement data is large, the updated reference option should be used. Otherwise, the **nonupdated reference option is** used. When operating with a nonupdated reference, large errors in the initial conditions specified for the state variables can cause the reference trajectory to diverge from the actual trajectory. This divergence causes gross violations of the linearity assumption underlying the minimum variance filtering theory. Normally, the updated reference option is used on the first couple iterations to obtain reasonably accurate intial conditions for a reference solution. The program is then switched to the nonupdated reference option for remaining iterations.

Processing data vectors or scalars: In equations (53e), the matrix J must be inverted. Inversion of large matrices on digital computers, especially when they are not well conditioned, has historically been a source of difficulty. Therefore, in the original STEP, all measurement vectors were broken into their scalar components and these were processed separately. Thus, J was never larger than a 1 x 1 matrix, or a scalar. When processing scalars at the same time, the state transition matrix is set to the identity matrix after the first scalar data point is processed. Scalar processing has the disadvantage of requiring more computation and eliminates the ability to account for correlation between the measurement vector components. Therefore, optional

capability has been added to permit processing of up to three component vectors as vectors. This requires the inversion of up to a 3 x 3 matrix J, but reduces the computational load and allows for the inclusion of correlation between measurement vector components in the future. Measurement data triples considered in the programs are (R,A,E) in STEP1 and STEP2, and a_{XM}, a_{YM}, a_{ZM}, (u,v,w), and (h, φ, θ) in STEP1.

c. Selection of error coefficients: The specific model parameters, C_i, to be estimated in any problem are specified by the program input. The more parameters being estimated, the longer the computation time because of the increased number of differential equations that must be integrated to determine the state transition matrix. For example, when estimating only the 10 state vector components, the 10 nonlinear differential equations plus 10 independent solutions of the 10 equations system of linear differential equations must be integrated, for a total of 110 equations. Fortunately, the coefficients of the linear differential equations are identical for all 10 solutions. If the state vector is expanded to include five model parameters, the 10 nonlinear differential equations plus 15 independents solutions of the 10-equation system of linear differential equations must be integrated, yielding a total of 160 equations.

Experience has shown that the most efficient means of solving postflight estimation problems is to commence iterating in the updated reference option with few, if any, model parameters being estimated. After one or two iterations, a "close" reference trajectory is obtained so the program is switched to the nonupdated reference option and the number of model parameters being estimated increased as the iterations proceed. This assures that when the dynamic model is most complex, linearity will be observed.

d. Smoothing: The procedure for smoothing the best estimate was described in Section III.E. It amounts to the following: After chronologically filtering the measurement data from initial time to final time, a best-estimate of the expanded state vector at final time, based on processing all data, is obtained. This estimate yields no knowledge of what the best estimate of the state is before final time considering the information obtained from all data. The smoothing option is included to integrate the final state estimate and its covariance matrix backward in time from final time to initial time. This yields $\hat{X}\left(t \middle| t_f\right)$ the best estimate of the state at any time (between initial and final time)

based on processing all data. During the backward smoothing the unweighted and weighted residuals between the measurement data and its best estimate can be calculated as well as accumulated to form the sum of the squares of the weighted residuals.

e. A priori information: Difficulty is frequently experienced when assigning variances to the initial estimated values specified for the state and model parameters (refs. 32 and 33). One should be aware of the fact that any finite variance assigned to these estimated variables implies some knowledge of the certainty of the estimate. If absolutely no certainty can be assigned to the initial state variable estimate then an infinite variance should be used. There are few if any cases, however, where such a complete lack of knowledge exists to warrant infinite variances. Nevertheless, when in doubt about the accuracy of the initial state, one should tend to make the variances large rather than too small. Underestimating the variances in relation to the actual errors in the state variables causes the minimum variance filter corrections to be too small and can result in the estimated trajectory diverging from the actual trajectory.

B. Program Applications

STEP2 is the more general of the two programs because it includes no assumptions as to the nature or mathematical modeling of the external forces and torques. Instead, it uses the actual accelerometer and inertial angular rate measurement. These data already include all propulsive, aerodynamic, control jet, and other miscellaneous forces and torques within them. Therefore, STEP2 is applicable to any type vehicle -- booster, reentry vehicle, airplane, helicopter, etc. The only requirement is that the vehicle contain accelerometers and gyros that measure and record acceleration and inertial angular rate data. Because of the fewer assumptions in the STEP2 model formulation one would expect to estimate a more accurate trajectory (position, velocity, and attitude) from STEP2 than from STEP1. Furthermore, one would expect the STEP2 model to satisfy the sensor data over a much longer time span than STEP1. On a recent reentry application, the STEP2 model was fit to 1300 sec of trajectory data for a very nonlinear, maneuver lifting reentry vehicle trajectory.

STEP1 is limited to vehicles whose only external accelerations are caused by aerodynamic forces of the form modeled in equations (134) thru (143). This limits STEP1 to nonthrusting in-atmosphere aircraft and spacecraft. Discrepancies still may exist between the actual aerodynamic force coefficient, atmospheric density, mass, and winds from those modeled in the program.

The error models in equations (147) thru (152) are an attempt to model such discrepancies in gross terms. Neverthless, the acutal variations experienced may not be a member of the family of candidates represented by the mathematical modeling. The filtering equations have treated the error model coefficients as constant, whereas they may actually be time-varying functions. As a result, the trajectory time span used when fitting the STEP1 model would be expected to be much smaller than that of STEP2. One might anticipate divergence to occur between the estimate and actual trajectory, when estimating long trajectory segments on STEP1, the divergence being caused by inconsistencies between the mathematical characterization and actual vehicle subsystem performance. Such occurances have been reported in references 34 thru 38. One means of alleviating this problem in STEP1 applications is to solve a series of small separate problems rather than one large continuous problem. In this manner, a stepwise approximation to the time varying error coefficients can be determined. Furthermore, if a STEP2 solution has previously been determined, a comparison of the state between STEP1 and STEP2 will serve as a means of checking the accuracy of the STEP1 solution.

It may occur that because of inadequate coverage or data dropout, sufficient tracking data are unavailable to solve the series of small-duration STEP1 problems. Because STEP2 fits over longer time spans, a STEP2 solution may be possible with the eradic data time history. In such cases, STEP1 can be fit to the position and velocity time histories estimated on STEP2.

C. Data Conditioning

Based on experience in the use of flight data in STEP, the following suggestions are offered relative to preprocessing or conditioning of data:

1) Those data that are used in the equations of motion (i.e., accelerations for STEP2 and inertial angular rates for both programs) should be carefully edited to remove wild points. The edited data are then smoothed to rid them of random noise. Because these data are satisfied exactly by the equations of motion, the only remaining error should be systematic and will be accounted for by the error models. A method for editing and smoothing is presented in Volume II of this report.

2) The data to be processed by the minimum variance filtering equations (i.e., accelerations for STEP1 and/or tracking and airborne radar for both programs) should not be smoothed. Because of the statistical nature of the filter theory, the random noise in the data should not be destroyed. The data should only be corrected for calibrations and other known systematic errors.

3) Two magnetic tapes are then prepared, one containing the smoothed and edited inertial angular rates and accelerations, the other the unsmoothed accelerations, tracking, airborne radar, position, and velocity to be statistically processed. Both tapes merge the data in chronological order and satisfying formats described in Volume II of this report.

Martin Marietta Corporation
Denver, Colorado, June 6, 1969

X. REFERENCES AND BIBLIOGRAPHY

A. References

1. Anon.: Handbook of Data Reduction Methods. Data Reduction Division, White Sands Missile Range, New Mexico, Aug. 13, 1964.

2. Monroe, A. J.: Digital Processes for Sampled Data Systems. John Wiley and Sons Inc., New York, 1962.

3. Sommer, S. C.; Boissevain, A. G.; Yee, Layton; and Hedlund, R. C.: The Structure of the Atmosphere from On-Board Measurements of Pressure, Temperature and Acceleration. NASA TN D-3933.

4. Smith, G. L.; Schmidt, S. F.; and McGee, L. A.: Application of Statistical Filter Theory to the Optimal Estimation of Position and Velocity on Board a Circumlunar Vehicle. NASA TR R-135, 1962.

5. White, J. S.; Callas, G. P.; and Cicolani, L. S.: Application of Statistical Filter Theory to the Interplanetary Navigation and Guidance Problem. NASA TN D-2697, Mar. 1965.

6. Minka, K.; Fein, J.; and Clemenz, B. E.: Orbit Determination and Ephemeris Computation. Scientific Report 2, Martin Marietta Corporation, Baltimore, Maryland, prepared for A. F. Cambridge Research Laboratory under Contract AF19(628)-4167, May 1966.

7. Anon.: Goddard Minimum Variance Orbit Determination Program. NASA-X-6400-62-191, Goddard Space Flight Center, Greenbelt, Maryland, Oct. 1962.

8. Wagner, W. E.: Reentry Filtering, Prediction, and Smoothing. J. Spacecraft Rockets, vol. 3, no. 9, Sept. 1966, pp. 1321 - 1327.

9. Coddington, E. A.; and Levinson N.: Theory of Ordinary Differential Equations, Chapter 3. McGraw-Hill Book Company, Inc., New York, 1955.

10. Kalman, R. E.: A New Approach to Linear Filtering and Prediction Problems. J. Basic Eng. (Trans. ASME), vol. 82D, 1960, pp. 35 - 45.

11. Gainer, P. A.: A Method for Computing the Effect of an Additional Observation on a Previous Least-Squares Estimate. NASA TN D-1599, 1963.

12. Fagin, S. L.: Recursive Linear Regression Theory, Optimal Filter Theory, and Error Analysis of Optimal Systems. 1964 IEEE Int. Conv. Record, 1964, pp. 216 - 240.

13. Mowery, V. O.: Least-Squares Recursive Differential-Correction Estimation in Nonlinear Problems. IEEE Trans. on Automatic Control, vol. AC-10, no. 4, 1965, pp. 399 - 407.

14. Sorenson, H. W.: Kalman Filtering Techniques. In vol. 3 of Advances in Control Systems, C. T. Leondes, ed., Academic Press, 1966, pp. 219 - 292.

15. Schmidt, S. F.: The Application of State Space Methods to Navigation Problems. Technical Report 4, Philco Western Development Lab., Oct. 1963 (also in vol. 3 of Advances in Control Systems, C. T. Leondes, ed.), Academic Press, 1966.

16. Wagner, W. E.: Statistical Trajectory Estimation Technology: Martin Marietta Corporation, Denver Division. Notes used in Reconstruction Technology Orientation course presented at NASA-LRC, Sept. 9-13, 1968, on Contract NAS1-8500.

17. Albert, A.; and Sittler, R. W.: A Method for Computing Least Squares Estimators that Keep Up with the Data. SIAM J. on Control, vol. 3, no. 3.

18. Mitchell, E. E. L.; and Rogers, A. E.: Quaternion Parameters in the Simulation of a Spinning Rigid Body. Simulation, June 1965.

19. Robinson, Alfred C.: On the Use of Quaternions in Simulation of Rigid-Body Motion. WADC TR 58-17. Wright-Patterson AFB, Ohio, Dec. 1958.

20. Ickes, B. P.: A New Method for Performing Digital Control System Attitude Computations Using Quaternions, Preprint 68-825, AIAA, Guidance, Control and Flight Dynamics Conference, Pasadena, California, Aug. 12-14, 1968.

21. Cook, A. H.: The Earth Today. Royal Astronomical Society, London W.1, and Distributed by Interscience Publishers, Inc., New York, 1961, p. 3.

22. Minzes, R. A.; Champion, K. S. W.; and Pond, H. L.: The ARDC Model Atmosphere. Air Force Surveys in Geophysics no. 115, AFCRC-TR-59-267, Air Force Cambridge Research Laboratories, Bedford, Massachusetts, 1959.

23. Anon.: U. S. Standard Atmosphere, 1962. Superintendent of Documents, U. S. Government Printing Office, Washington D. C., Dec. 1962.

24. Hildebrand, F. B.: Introduction to Numerical Analysis. McGraw-Hill Book Company, Inc., 1956, p. 233.

25. Greub, W. H.: Linear Algebra. Springer-Verlag New York Inc., 1967, p. 111.

26. Serold, A. C.: Planetary Atmosphere Determination Error Analysis Using Kalman Filter. Preprint 68-1-6, AAS, AAS Space Projections, Rocky Mountain Region Meeting, Denver, Colorado, July 15-16, 1968.

27. Wagner, W. E.: Prediction Accuracy Program, Formulation and Utilization. ER 13143, Martin Marietta Corporation, Baltimore, Maryland, Sept. 1963 (Prepared for NASA-GSFC under Contract NAS5-1611, Task 11).

28. Lee, Gentry; Falce, R. and Hopper, F.: Interplanetary Trajectory Error Analysis - An Introduction and Survey. Scientific Report 1, December 1967; and Computer Program Design Vol II - Final Report MCR-67-441. Martin Marietta Corporation, Denver, Colorado, Apr. 1968 (Prepared for NASA-MSFC under Contract NAS8-21120).

29. Sugihara, S.: Covariance Computation Program (COVA), Recovery Covariance Analysis. TDR-469(5807)-1, Aerospace Corporation, April 1965 [Prepared for USAF Systems Command under Contract AF04(695)-469].

30. Janus, J. P. and LeMay, J. L.: Error Analyses of Self-Contained Orbit Navigation Systems. TOR-469(5540-10)-6, Aerospace Corporation, El Segundo, California, Dec. 1964 [Prepared for USAF Systems Command under Contract AF04(695)-469].

31. Serold, A. C.: Pilot 6D Reentry Error Analysis Program. ER 14537, Martin Marietta Corporation, Baltimore, Maryland, Mar. 1967.

32. Nishimura, T.: On the a priori Information in Sequential Estimation Problems. IEEE Trans. on Automatic Control, vol. AC-11, No.w, 1966, pp. 197 - 204.

33. Nishimura, T.: Correction to and Extension of "On the a priori Information in Sequential Estimation Problems", IEEE Trans. on Automatic Control, vol. AC-12, 1967, p. 123.

34. Fitzgerald, R. J.: Error Divergence in Optimal Filtering Problems. Second IFAC Simposium on Automatic Control in Space, Vienna, Austria, Sept. 1967.

35. Heffes, H.: The Effect of Erroneous Models on the Kalman Filter Response. IEEE Trans. on Automatic Control, vol. AC-11, no. 3, 1966, pp. 541 - 543.

36. Jazwinski, A. H.: Limited Memory Optimal Filtering. Proc. 1968 Joint Automatic Control Conference, Ann Arbor, Michigan, June 1968, pp. 383 - 393 (also in IEEE Trans. on Automatic Control, Oct. 1968).

37. Price, C. F.: An Analysis of the Divergence Problem in the Kalman Filter. IEEE Trans. on Automatic Control.

38. Schmidt, S. F.: Compensation for Modeling Errors in Orbit Determination Problems. Report 67-16, Analytical Mechanics Associates, Inc., Nov. 1967.

B. Bibliography

1. Texts.-

Battin, R. H.: Astronautical Guidance. McGraw-Hill Book Company, Inc., New York, 1964.

Bellman, R.: Introduction to Matrix Analysis. McGraw-Hill Book Company, Inc., New York, 1960.

Deutsch, R.: Estimation Theory. Prentice-Hall, 1965.

Doob, J. L.: Stochastic Processes. John Wiley and Sons, New York, 1963.

Feller, W. F.: An Introduction to Probability Theory and Its Applications. John Wiley and Sons, New York, 1961.

Householder, A. S.: The Theory of Matrices in Numerical Analysis. Blaisdell, New York, 1964.

Parzen, E.: Modern Probability Theory and Its Application. John Wiley and Sons, New York, 1960.

Sorenson, H. W.: Kalman Filtering Techniques. In vol. 3, Advances in Control Systems, C. T. Leondes, ed., Academic Press, 1966.

Zadeh, L. A.; and Desoer, C. A.: Linear System Theory. McGraw-Hill Book Company, Inc., New York, 1963.

2. Reports and papers.-

Battin, R. H.: Statistical Optimizing Navigation Procedure for Space Flight. ARS J., vol. 32, no. 11, 1962, pp. 1681 - 1696.

Bellantoni, J. F.; and Dodge, K. W.: A Square Root Formulation of the Kalman-Schmidt Filter. AIAA J., vol 5, no. 7, July 1967, pp. 1309 - 1315.

Brammer, K. G.: Lower Order Linear Filtering and Prediction of Nonstationary Random Sequences. Report 67-0003, Seiler Research Laboratory, USAF Academy, Colorado, Feb. 1967.

Bryson, A. E.; and Frazier, M.: Smoothing for Linear and Nonlinear Dynamic Systems. Proc. of the Optimum Systems Synthesis Conf., U. S. Air Force Technical Report ASD-TDR-063-119, 1963.

Bryson, A. E.; and Johansen, D. E.: Linear Filtering for Time-Varying Systems Using Measurements Containing Colored Noise. IEEE Trans. on Automatic Control, vol. AC-10, no. 1, 1965, pp. 4 - 10.

Bryson, A. E., Jr.; and Henrikson, L. J.: Estimation Using Sampled-Data Containing Sequentially Correlated Noise. Paper 67-541, AIAA Guidance, Control, and Flight Dynamics Conf., Huntsville, Alabama, 1967.

Cosaert, R.; and Gottzein, E.: A Decoupled Shifting Memory Filter Method for Radio Tracking of Space Vehicles. XVIII International Astronautical Congress, Belgrade, Yugoslavia, 1967.

Cox, H.: On the Estimation of State Variables and Parameters for Noisy Dynamic Systems. IEEE Trans. on Auto Control, Jan. 1964, pp. 5 - 12.

Cox, H.: Estimation of State Variables via Dynamic Programing. Proc. 1964 Joint Automatic Control Conf., Stanford, California, 1964, pp. 376 - 381.

Denham, W. F.; and Pines, S.: Sequential Estimation when Measurement Function Nonlinearity is Comparable to Measurement Error. AIAA J., vol. 4, no. 6, June 1966.

Detchmendy, D. M.; and Sridhar, R.: Sequential Estimation of States and Parameters in Noisy Nonlinear Dynamical Systems. Proc., 1965 Joint Automatic Control Conf., 1965, pp. 56 - 63.

Deyst, J. J.; and Price, C. F.: Conditions for Asymptotic Stability of the Discrete, Minimum Variance, Linear Estimator, IEEE Trans. on Automatic Control.

Griffin, R. E.; and Sage, A. P.: Large- and Small-Scale Sensitivity Analysis of Optimum Estimation Algorithms. Proc. Joint Automatic Control Conference, Ann Arbor, Michigan, June 1968, pp. 977 and 988.

Griffin, R. E.; and Sage, A. P.: Sensitivity Analysis of Discrete Filtering and Smoothing Algorithms, Paper 68-824, AIAA Guidance, Control, and Flight Dynamics Conference, Pasadena, California, Aug. 1968.

Ho, Y. C.; and Lee, R. C. K.: A Bayesian Approach to Problems in Stochastic Estimation and Control. IEEE Trans. on Automatic Control, vol. AC-9, no. 4, 1964, pp. 333 - 339.

Ho, Y. C.: On the Stochastic Approximation Method and Optimal Filtering Theory. J. Math. Anal. and Appl., vol. 6, no. 1, 1963, pp. 152 - 154.

Ho, Y. C.: The Method of Least Squares and Optimal Filtering Theory. Memorandum RM-3329-PR, The Rand Corporation, 1962.

Jazwinski, A. H.: Adaptive Filtering in Satellite Orbit Estimation, Analytical Mechanics Associates, Lanham, Maryland, 1968.

Jazwinski, A. H.: Filtering for Nonlinear Dynamical Systems. IEEE Trans. on Automatic Control, Oct. 1966, pp. 765 - 767.

Jazwinski, A. H.: Limited-Memory Optimal Filtering. Analytical Mechanics Associates, Inc., Lanham, Maryland, 1968.

Jones, J. F.; and Blair, J. M.: Stability Analysis of Minimum Variance Estimators. Preprint 66-107, AAS, July 1966.

Kalman R. E.; and Bucy, R. S.: New Results in Linear Filtering and Prediction Theory. J. Basic Eng. (ASME Trans.), vol, 83D, 1961, pp. 95 - 108.

Kalman, R. E.: New Methods in Wiener Filtering Theory. Proc. of the Symp. on Eng. Appl. of Random Function Theory and Probability, J. L. Bogdanoff and F. Kozin, eds., John Wiley and Sons, 1963.

Larson, R. E.; and Peschon, J.: A Dynamic Programing Approach to Trajectory Estimation. IEEE Trans. on Automatic Control, July 1966, pp. 537 - 540.

Lee, R. C. K.: Optimal Estimation, Identification, and Control. Research Monograph no. 28, M. I. T. Press, 1964.

Mehra, R. K.; and Bryson, A. E.: Smoothing for Time-Varying Systems Using Measurements Containing Colored Noise. Proc., 1968 Joint Automatic Control Con., Ann Arbor, Michigan, June 1968.

Mehra, R. K.: On Optimal and Suboptimal Linear Smoothing. Technical Report 559, Division of Engineering and Applied Physics, Harvard University, Cambridge, Massachusetts, Mar. 1968.

Minka, Karlis: Propagation of Errors in Orbit Analysis. ER 13677, Martin Marietta Corporation, Baltimore, Maryland, Aug. 1964.

Nishimura, T.: Error Bounds of Continuous Kalman Filters and the Application to Orbit Determination Problems. IEEE Trans. on Automatic Control, vol. AC-12, no. 3, 1967, pp. 268 - 275.

Ohap, R. F.; and Stubberud, A. R.: A Technique for Estimating the State of a Nonlinear System, IEEE Trans. on Automatic Control, Apr. 1965, pp. 150 -155.

Pentecost, E. E.: Synthesis of Computationally Efficient Sequential Linear Estimators. Ph.D. Dissertation, UCLA, June 1965.

Rauch, H. E.; Tung, F.; and Striebel, C. T.: Maximum Likelihood Estimates of Linear Dynamic Systems. AIAA J. vol. 3, no. 8, 1965, pp. 1445 - 1450.

Rishel, R. W.: Convergence of Sampled Discrete Optimum Filters. Proc., 1968 Joint Automatic Control Conference, Ann Arbor, Michigan, June 1968, pp. 863 - 870.

Schlee, F. H.; and Standish, C. J.: Divergence in the Kalman Filter. AIAA J. vol. 5, no. 6, June 1967, pp. 1114 - 1120.

Schweepe, F. C.: Algorithms for Estimating a Reentry Body's Position. Velocity and Ballistic Coefficient in Real Time or from Postflight Analysis, ESD-TDR-64-583, M. I. T., Lincoln Laboratory, Dec. 1964.

Scott, M. T.; Rede, E.; and Wygant, M. N.: Discrete Recursive Estimation: Air Optimum Automated Data Processing Technique for Multi-Radar Tracking Systems. Technical Report 61, Analysis and Computation Directorate, White Sands Missile Range, New Mexico, Aug. 1967.

Shapiro, I. I.: The Prediction of Ballistic Missile Trajectories from Radar Observations. McGraw-Hill Book Company, Inc., New York, 1957.

Soong, T. T.: On a priori Statistics in Minimum Variance Estimation Problems. Report 32-500, Jet Propulsion Laboratory, June 1965.

NASA-Langley, 1969 — 21 CR-1482