Technologies Involved in Configuring an Advanced Earth-to-Orbit Transport for Low Structural Mass

by

Ian O. MacConochie, Aerospace Engineer

Phillip J. Klich, Space Systems Technologist

NASA Langley

For Presentation at the
39th Annual Conference
of the
Society of Allied Weight Engineers, Inc.

Saint Louis, Missouri
May 12-14, 1980

SAWE Paper No. 1380
Index Category No. 18

ABSTRACT

The current space shuttle is expected to adequately meet Government and industry needs for the transport of cargo to and from orbit well into the 1990's. However, continual study of potential follow-on shuttle systems is necessary and desirable in order to complement ongoing research in materials, structures, propulsion, aerodynamics, and other related areas. By studying alternate systems well in advance, it will be possible to explore the various technologies and develop those for which there is the greatest apparent payoff.

In this paper a single-stage Earth-to-orbit transport designed for delivery of approximately 29,500 kg (65,000 lb) payload will be described. The vehicle, which takes off vertically and lands horizontally, is 60 m (197 feet) long and weighs approximately 1.8 Gg (4 M lb) at liftoff. In the interest of weight reduction, a simple body of revolution is utilized for the main body shell. In this design the main propulsion tanks serve as a primary load-carrying structure. Further, in order to minimize structural mass, the cargo bay is located between two of the main propellant tanks. The cargo volume, at 396 m^3 (14,000 $feet^3$), exceeds that provided by the shuttle; but the bay itself is nonconforming in shape--being approximately 10 m (32 feet) in diameter by 5 m (17 feet) long. Dual-fuel propulsion is employed, since a number of studies have shown that (though lowering performance) the operation of hydrocarbon (RP) engines in parallel with LOX/LH_2 engines results in a net reduction in the vehicle's physical size and structural mass. Other weight-saving features entail the extensive use of honeycomb sandwiches, advanced materials, and advanced fabrication techniques.

Some of the technology issues involved in reducing vehicle mass are: "flyability" and entry heating on bodies of circular shape; compatibility of nonconforming cargo bay geometry to future mission scenarios; fabrication and assembly of large honeycomb sections (particularly of tankage); development of high-pressure RP engines and nozzle extension systems for LOX/LH_2 engines. Also critical to the development of a lightweight vehicle is the development of active control systems without which control surfaces become unreasonably large and heavy.

The vehicle presented is utilized only as a means to study and identify various technologies needed in order to develop a low mass Earth-to-orbit transportation system for the future. A key element in this task is the Aerospace Vehicle Interactive Design System (AVID)--a program (or system) which is capable of rapid estimation of mass properties and systems performance for a given set of mission requirements.

The conclusion of this study is that vehicle geometry and structural/materials technology are critical to the development of efficient single-stage Earth-to-orbit transports.

TECHNOLOGIES INVOLVED IN CONFIGURING AN EARTH-TO-ORBIT TRANSPORT FOR LOW STRUCTURAL MASS

BY

Ian O. MacConochie and Phillip J. Klich
NASA-Langley Research Center
Hampton, Virginia

INTRODUCTION

The current space shuttle is expected to adequately meet Government and industry needs well into the 1990's for the transport of personnel and cargo between Earth and orbit. Continual study of new concepts is necessary however, so that the technology will be available to build the next generation system. For these new concepts the designer has many options with regard to overall vehicle/system configuration. These options include the choice of horizontal or vertical take-off, horizontal or vertical landing, winged or ballistic shapes, and dual or single-fueled propulsion systems (Refs. 1-4).

For the vehicle described in this paper, only a vertical take-off single-stage-to-orbit system is considered because most of the technology issues are addressed in this design. Although a single-stage vehicle is more sensitive to weight growth, the advantages which accrue from the elimination of booster stages or launcher sleds make it potentially attractive; also the technologies involved in configuring an efficient lightweight structure, thermal protection system, and rocket engines are not too different from the multielement systems mentioned above, should one of these ultimately be the selected system.

A characteristic of the current vehicle, which differentiates it from many other studies whether multielement or single stage, is that a simple body of revolution is proposed for the body shape (Figs. 1 and 2). This results in a substantial reduction in structural mass as opposed to, for instance, a body with trapezoidal cross sections. Some preliminary sizing of subsystems has been made using the Aerospace Vehicle Interactive Design System (AVID) Ref. 1. The mass properties printout from the AVID sizing routine is shown in Table I. In addition, some preliminary aerodynamic analyses have been made using the same system--these latter results indicate that the vehicle is trimmable hypersonically and subsonically for a 73-percent c.g. location and will land at approximately 100 m/s (195 knots).

For the main propulsion, a dual-fuel system is employed; the characteristics of which are given in Table II. In this system both oxygen/hydrogen and oxygen/hydrocarbon engines are operated in parallel at lift-off. After approximately 165 seconds of flight, the hydrocarbon propellant is depleted, and these engines (referred to as Mode I engines) are shut-down. The vehicle continues to orbit on the hydrogen (or Mode II) engines. The above propulsion system selection and other applied technologies are all directed toward low structural mass.

SYMBOLS

C_λ	volume ratio of mode II to mode I fuel tanks
M	mass, Kg
R_e	thrust ratio of mode I to total engines
R_f	mass ratio, mode I propellants to total propellants
V	tank volume, m^3
h	gas generator hydrogen mass flow fraction
ℓ ref	reference length of the vehicle, taken as the length from the nose to the hingeline of the body flap
ρ	density, Kg/m^3

Subscripts:

HGG	hydrogen for gas generator
EH_2	hydrogen rocket propellant
LH_2	total vehicle liquid hydrogen requirement
LOH	liquid oxygen for hydrogen engines
LOR	liquid oxygen for RP engines
LOX	total vehicle liquid oxygen requirement
O	oxidizer
RP	hydrocarbon rocket propellant
f	fuel
1	related to Mode I propulsion
2	related to Mode II propulsion

VEHICLE PACKAGING

For the single-stage system with the dual-fuel option, the major volume requirements are for the RP, LOX, LH_2, the cargo bay, and the engine compartment. Lesser volumes must be provided for the crew and mission specialists, landing gear, avionics, and other subsystems. The baseline arrangement for this vehicle is shown in Fig. 2.

One of the most dramatic savings in structural mass for a vehicle with internally stored propellants is secured when the cargo bay shape of the shuttle is not utilized; the shuttle cargo bay being 15 ft in diameter by 60 ft long (Ref. 4). This aspect on a per unit length basis is depicted in Fig. 3 wherein the structural mass of a conventionally packaged vehicle is shown to be 2218 Kg/m (1491 lb/ft) versus 866 kg/m (582 lb/ft) for a simple body of revolution. This large difference (which is true for orbiters in a fully reusable system as well as for single-stage systems) is due to the elimination of extra fairings, ringframes, support structure, and unusable space on the more conventional designs. This packaging problem does not exist for the current shuttle orbiter since it is essentially a flying cargo bay without internal main propellant tankage. The impact of nonconformance in payload geometry for the current study vehicle would have to be evaluated against future payload/mission scenarios and whether or not the vehicle is being sized for small cargos (i.e., about 5 Mg), baseline shuttle, or heavy-lift--the latter involving payloads as high as 227 Mg (500 K lbs).

In addition to the cargo bay, the shape and location of the main propellant tanks (such as the LOX, RP, and LH_2) must be considered. In advanced transportation systems studies, designers have preferred to locate the much lighter propellants forward to minimize compressive loads along the bulk of the vehicle shell length (Refs. 2-5). Shell weight penalty versus axial loading intensity (N_x) can be obtained from the curve in Fig. 4. The consequences, for instance, of placing the much heavier LOX forward would yield a shell axial inertial load of approximately 613 kN/m (3500 lb/in) compared with a nominal of 88 kN/m (500 lb/in) for the hydrogen tank forward. Most of the inertial (compressive) load in this latter case can be confined to the aft skirt (or a thrust structure). At the higher loading intensity, the graph shows a shell unit mass of approximately 20 Kg/m^2 (4 lb/ft^2). This value could be reduced for most designs by at least 50 percent for an unpressurized adaptor section. (Actually, the estimated value is somewhat higher than the theoretically achievable value indicated by the graph.)

Some consideration was given to locating the RP fuel ahead of the cargo bay so that the cargo would be nearer the nominal vehicle entry center-of-gravity (C.G.). The aft location was selected, however, because of the savings in structural mass of an estimated 3981 Kg (7675 lbs) (Fig. 5). Not only is the compressive inertial load reduced in the manner just described for the LOX, but this arrangement permits the use of one bulkhead for both a cargo bay deck and for RP containment.

Another dominant factor regarding internal vehicle configuration which impacts structural mass is the crew and mission specialists location. These personnel must have ready access to the cargo bay. The only viable

option (other than a structurally heavy tunnel from the nose section) is to place the pressurized cabin within the cargo bay. The visibility for landing is poor for the current design since only flush-mounted viewing ports are provided. The savings in cabin structure, windshield, and thermal protection over a conventional cabin and windshield are estimated, however, to be about 2,000 Kg (4410 lbs). An auto-pilot system and a nose-gear-mounted TV camera are provided as landing aides. Mission and payload specialists are provided with viewing ports in rear, bottom, and top of the crew compartment for operations such as for the manipulation of cargo.

VEHICLE C.G.

A discussion of the problems and technologies involved in C.G. positioning for these vehicles is essential. As stated earlier, aft C.G.'s are a chronic problem making reconfiguration or the adaptation of active control systems necessary to render the vehicle flyable (Ref. 6). To date, there appears to be no practical vehicle packaging arrangement which would alleviate this problem. If there was some way of moving part or all of the propulsive machinery further forward, this would rapidly result in a forward movement of the C.G. But this does not appear to be possible for rocket propulsion because of plume impingement, particularly at high altitudes where rocket exhausts are highly expanded. Therefore, without some unusual development in engines, structure, or vehicle configuration, entry C.G.'s will apparently range from 71 percent to 75 percent of vehicle reference length, the latter value being characteristic of the so-called heavy-lift vehicles. The rearward trend with increased vehicle size is due to:

a. The decreased effect of the relatively constant masses of the pilot compartment, avionics, power, and personnel provisions which are typically located ahead of the nominal vehicle C.G.

b. The effect of the thermal protection system mass which is located ahead of the nominal vehicle entry C.G. but whose mass does not increase as fast as the rocket engines located aft of the C.G.; whereas rocket engine mass is very nearly proportional to propellant loading or $(\ell\ \mathrm{ref})^3$, thermal protection system mass is more nearly proportional to $(\ell\ \mathrm{ref})^2$, increasing slightly faster than the exponent, "two", indicated because of a trend toward higher entry planform loadings (higher heating) for larger vehicle sizes.

SELECTING AN OPTIMAL FUEL SPLIT

The fact that utilizing two fuels (one high density and of lower performance) can result in a lower structural mass for a single-stage system has been fairly well established (Refs. 7 and 8). In this section the technique used to calculate the optimal proportions between the propellants will be shown. In order to size the tankage for the two fuels (and the oxidizer) and establish the exact value of the optimal propellant split for the present vehicle, a series of equations have been developed for use in the analysis of the vehicle mass properties. The equations are based on

the following assumptions for oxidizer to fuel mass ratios and propellant densities:

Mode I (RP propellant system)
mass ratio oxidizer-to-fuel
$M.R._1 = 2.9/1$
density of propellants
$\rho_{f_1} = 800\ Kg/m^3\ (50\ lb/ft^3)$
$\rho_{o_1} = 1142\ Kg/m^3\ (71.3\ lb/ft^3)$

Mode II (LH_2 propellant system mass)
mass ratio oxidizer-to-fuel
$M.R._2 = 6.0/1$
$_{f_2} = 71\ Kg/m^3\ (4.43\ lb/ft^3)$
$_{o_2} = 1142\ Kg/m^3\ (71.3\ lb/ft^3)$

The Mode I engine is a special design and requires some hydrogen to cool the engine bell and operate a gas generator; the arrangement is very efficient yielding a delivered vacuum specific impulse of 345 seconds. When taken as a percentage of the RP, the mass flow of hydrogen is 4 percent. This engine is described in Ref. 9.

Using the above constants for propellant densities and mass ratios, the following volumetric relationships are obtained.

Hydrogen volume for the Mode I rocket engine gas generator as a function of RP volume:

$$V_{HGG} = 11.287\ h\ V_{RP}$$

LOX-to-RP volume ratio required for the Mode I engines (assuming a 2.9/1 mass ratio) is:

$$\frac{V_{LOR}}{V_{RP}} = 2.0337$$

LOX-to-hydrogen volumetric ratio for the Mode II engines (assuming a 6/1 mass ratio) is:

$$\frac{V_{LOH}}{V_{EH_2}} = 0.3728$$

Now the total tankage volume is given by:

$$V_{TOT} = V_{EH_2} + V_{RP} + V_{LOR} + V_{LOH} + V_{HGG}$$

and using the definition of R_f as the mass flow through the Mode I engines divided by the total mass flow

$$R_f = \frac{M_{LOR} + M_{RP} + M_{HGG}}{M_{LOR} + M_{RP} + M_{LOH} + M_{LH_2} + M_{HGG}}$$

Solving the above equations simultaneously and eliminating variables, the final relationships result:

$$C_\lambda = \frac{1 - R_f}{R_f} (6.288 + 1.61\ h)$$

$$V_{RP} = \frac{V_{TOT}}{3.4852 + 1.3728\ C_\lambda}$$

$$V_{EH_2} = C\ \ V_{RP}$$

$$V_{HGG} = 0.4516\ V_{RP}$$

$$V_{LOR} = 2.0337\ V_{RP}$$

$$V_{LOH} = 0.3728\ V_{EH_2}$$

$$V_{LH_2} = V_{EH_2} + V_{HGG}$$

$$V_{LOX} = V_{LOR} + V_{LOH}$$

At the extreme left in Fig. 6, $R_f = 0$ and an all LOX/LH_2 vehicle is indicated wherein a volumetric ratio of tankage LOX-to-LH_2 of 0.3728 or a mass ratio of 6/1 exists. As R_f is increased, the proportions and corresponding increases in requirements for RP, hydrogen (V_{HGG}) for the gas generator, and liquid oxygen (V_{LOR}) for the RP engines are shown. These trends from the standpoint of tank sizes are depicted in Fig. 7 wherein the vehicle moldines were maintained as the R_f factor is altered. Not only is a selection of the optimal mass split between propellants for Mode I and Mode II engines necessary, but a selection of the proper thrust split between the two types of engines is required (Ref. 10). The engine selections are shown at the right in Fig. 7. For the baseline vehicle design shown earlier in Fig. 1, for which mass properties are given in Table I, the thrust split is $R_e = 0.76$ or 76 percent of the total thrust is being delivered by the RP engines at lift-off and early in the flight. The engine characteristics for this vehicle are given in Table II.

In addition to maintaining vehicle moldlines in the study, a self-imposed groundrule is that the Mode II engines would be derivatives of the current space shuttle main engines (SSME's). The sea-level static thrust shown at 1748 kN (393 klb) is somewhat higher than the current space shuttle engine because the expansion ratio has been reduced from 77.5/1 to 40/1. An extendable skirt is used on the SSME engines with an expansion ratio of 135, a feature used to improve high altitude engine performance. The payload deliverable versus R_f for optimal engine arrangements is shown in Fig. 8. These curves are based on studies using the AVID system (Refs. 1 and 11). Abort considerations dictated the use of three SSME engines, and the best performance match possible was selected. The top vehicle shown in Fig. 7 (i.e., at $R_f = .8$ shown in Fig. 8), is optimal from a payload delivered standpoint, but the abort-to-orbit capabilities are compromised in the "engine-out" case since a loss of one SSME engine represents a 50-percent loss of power versus 33 1/3 percent for the

three-engine design. In a future study it may be appropriate to increase the vehicle payload capability by adding Mode I engines and propellant, while limiting the Mode II propulsion to the same SSME engines--at the same time the optimal thrust and mass split could be achieved.

BODY AND WING STRUCTURE

Because of the criticality of mass for a single-stage system, the propulsion system, vehicle shape, and packaging must be optimized; but particular attention should also be given to materials selection and structural design. In this regard a high-temperature nickel steel honeycomb sandwich has been tentatively selected for the forebody and all functions required of the body shell, namely: fuel containment, thermal protection, and transmission of body loads combined into one. A comparison of this concept with more conventional structure is shown in Fig. 9. The idea of a single shell to perform all these functions was proposed in Ref. 3. In the current design a savings of 30 percent is projected over conventional structure having separate structure, tankage, and insulation systems, the unit mass being 26 Kg/m^2 (5.3 lb/ft^2) versus 37 Kg/m^2 (7.6 lb/ft^2). The feasibility of such a concept is certainly not resolved and is the basis for continuing study. Purging and venting multiwall tanks filled with a cryogenic fluid is complex and is a strong incentive to attempt to develop a single-wall tank design.

For the intertank/cargo bay region a composite graphite polyimide honeycomb structure is utilized. The irregularly shaped cargo bay volume is 396 m^3 (14,000 ft^3) compared to the shuttle 15 x 60 ft cargo bay which has a volume of 300 m^3 (10,600 ft^3). The pilot, copilot, and mission specialists are accommodated in a separate metallic pressurized capsule at the forward end of the cargo bay just behind the aft dome of the main hydrogen tank. The RP fuel is packaged in a volume above the LOX tank forward dome and below the aft bulkhead of the cargo bay--the latter constituting the deck of the cargo compartment when the vehicle is mounted vertically in the launch position (Fig. 10). A thick thermal insulator of foam-filled honeycomb is placed over the LOX dome to reduce heat transfer between the RP and LOX. A moderate amount of insulation is used around the perimeter of the tank to maintain temperatures at entry below that for the RP cell bladder. Most of the RP tank, however, is located above the wing/body fairing where it is relatively protected from windward entry heating.

For the LOX tank, a honeycomb sandwich has been selected having a borsic aluminum internal face sheet, low conductivity core, and a titanium outer face sheet (Ref. 12). These alternate material selections (compared to the forebody LH_2 tank) are made possible by much lower heating rates, yielding temperatures for the most part which are within the capabilities of the titanium. The aft skirt is fabricated of superplastic formed diffusion bonded titanium (Ref. 13). Engine thrust structure is fabricated from boron aluminum tubular epoxy reinforced titanium tubular trusses (Ref. 14).

The wings of these advanced Earth-to-orbit transports are markedly different from any previous designs. They are of clipped delta planform but, unlike many military planes, are much thicker in cross section (i.e., 10 to 12 percent chords vs. 3-1/2 to 7 percent). Further, they are unencumbered by high lift-devices and have relatively blunt leading edges

to minimize heating. Additionally, these wings have no engine or landing gear installations and carry no propellant. These factors warrant the use of entirely new approaches to structural design and lead to substantial reductions in wing weight. In this regard, thick honeycomb covers of graphite/polyimide (G/P) are used as the main load carrying element (Ref. 15). The wing has no ribs except for close-outs at root and tip. Other internal structure is kept to a minimum. Heat pipes are used for leading edges and electro-mechanical devices for control surface actuation (Refs. 16 and 17). A wing with little internal structure and similar to the current design was found to be capable of sustaining a static load equal to 1.4 x limit load by a margin of 9 percent (Fig. 11), the structure failing initially in buckling near the wing tip in the honeycomb sandwich cover. Conventional and advanced structures are compared in Fig. 12. An advanced RSI is shown as the high-temperature thermal protection system. Since the expansion coefficients of RSI and G/P are similar, the elimination of the strain isolation pad (SIP) is possible (Ref. 15). The combined unit mass of structure and thermal protection system which results is 20 Kg/m^2 (4.1 lb/ft^2) versus 33 Kg/m^2 (6.8 lb/ft^2) for the more conventional system shown.

The wing has a 47° leading edge sweep and a 3 1/2° dihedral. The wing chords are NACA 0010-64-12 at the tip and -10 at the root (Ref. 18). This is a symmetrical airfoil with relatively blunt leading edge. The wing root chord is 20.2 m (66.3 ft); the exposed semispan is 15.2 m (50 ft). The exposed area is 385 m^2 (4,139 ft^2) compared to the shuttle at 179 m^2 (1924 ft^2). Leading edge radii range between 22 cm (8.7 inches) at the root to 6.8 cm (2.7 inches).

NEEDED TECHNOLOGIES

As stated earlier, the primary objective of this study (and the attendant investigations into various subsystems) is to identify useful areas for more concentrated or enhanced research and development--activities which, hopefully, will be generally applicable to, not just one, but a wide variety of potential Earth-to-orbit transport designs. In this regard the following areas of activity appear to be important:

- Development of aerodynamic data for simplified fuselage shapes which lend themselves to low structural mass.
- Development of active control systems and supporting aerodynamic data to accommodate vehicles with aft C.G.'s.
- Development of fabrication and joining technologies for large honeycomb sections.
- Adaptation of structural sizing programs to the new structures and environment (particularly high thermal gradients).
- Determination of the optimal structural design for large delta planform wings having thick chord sections.
- Development of composites for main propulsion tankage.

CONCLUSION

A single-stage Earth-to-orbit transport has been configured with low structural mass as the prime objective. Technologies such as those related to aerodynamic design, structural materials, and structural configuration must be explored further in order to assure viability of a low-cost lightweight system such as that proposed. Vehicle geometry and structural/materials technology are both regarded as critical areas to the development of such a system.

REFERENCES

[1]Wilhite, A. W. and Rehder, J. J., "AVID: A Design System for Technology Studies of Advanced Transportation Concepts," AIAA paper No. 79-0872.

[2]Haefeli, R. C., et al, "Technology Requirements for Advanced Earth-Orbital Transportation Systems," Final Report NASA CR-2866, October 1977.

[3]Hepler, A. K. and Bangsund, E. L., "Technology Requirements for Advanced Earth-Orbital Transportation Systems," NASA CR-2878, July 1978.

[4]MacConochie, I. O., "Configuration Considerations in the Design of Earth-to-Orbit Transports," AIAA/NASA Conference on Advanced Technology for Future Space Systems, May 8-10, Hampton, Virginia, AIAA Paper No. 79-0871.

[5]Hepler, A. K. and Bangsund, E. L., "Technology Requirements for Earth-to-Orbit Transports, Volume 3, Summary Report--Dual Mode Propulsion, NASA CR-3037, July 1978.

[6]Hepler, A. K., Zeck, H., Walker, W. H., and Schafer, D. E., "Applicability of control Configured Design Approach to Advanced Earth Orbital Transportation Systems," NASA CR-2723, August 1978.

[7]Salkeld, R. and Beichel R., "Reusable One Stage-to-Orbit Shuttles: Brightening Prospects," Aeronautics and Astronautics, June 1973, pp. 49-58.

[8]Martin, J. A. and Wilhite, A. W., "Dual-Fuel Propulsion: Why It Works, Possible Engines, and Results of Vehicle Studies," AIAA paper No. 79-878.

[9]Luscher, W. P. and Mellish, J. A., "Advanced High Pressure Engine Study for Mixed-Mode Vehicle Applications," NASA CR-135141, January 1977.

[10]Rehder, J. J., "Effect of Propulsion System Characteristics on Ascent Performance of Dual-Fueled Single-Stage Earth-to-Orbit Transports," NASA TP 1115, December 1977.

[11]Wilhite, A. W., "Optimization and Evaluation of Main Liquid Rocket Propulsion Systems for Advanced Earth-to-Orbit Shuttles," AIAA Paper No. 78-972.

[12]Royster, D. M.; Wiant, H. R.; and Bales, T. T., "Joining and Fabrication of Metal Matrix Composites," TMX-3282, October 1975.

[13]Pulley, J., "Evaluation of Low-Cost Titanium Structure for Advanced Aircraft," NASA CR-145111, 1976.

[14]Corvelli, N. and Carri, R., "Evaluation of Boron-Epoxy-Reinforced Titanium Tubular Trusses for Application to a Space Shuttle Booster Thrust Structure," NASA TN D-6778, June 1972.

[15]Davis, J. G., Jr., "Composites for Advanced Space Transportation Systems-(CASTS)," Proceedings of Graphite/Polyimide Composites Symposium, Langley Research Center, March 1, 1979, NASA Conference Publication 2079, p. 5.

[16]Camarda, C. J., "Analysis and Radiant Heating Tests of a Heat-Pipe-Cooled Leading Edge," NASA TN D-8468.

[17]Edge, J. T., "An Electromechanical Actuator Technology Development Program," Soc. Automative Engines, Tech. Paper No. 780581, Aerospace Fluid Power and Control Symposium, Cherry Hill N.C., April 12, 1978.

[18]Abbott, I. H. and VanDoenhoff, A. E., "Theory of Wing Sections," Dover Publications, 1959.

TABLE I.- AVID/MASS REPORT

SUBSYSTEM	MASS KG	WEIGHT LBS
1.0 WING GROUP	12434	
2.0 TAIL GROUP	1216	
3.0 BODY GROUP		
BASIC STRUCTURE	11209	
THRUST STRUCTURE	5066	
RP-1 TANK	3921	
LOX TANK	9583	
LH_2 TANK	8024	
BODY FLAP	205	
4.0 THERMAL PROTECTION	16968	
5.0 LANDING GEAR	4997	
6.0 PROPULSION	23541	
7.0 PROPULSION, RCS	1473	
8.0 PROPULSION, OMS	1634	
9.0 PRIME POWER	1260	
10.0 ELEC CONV AND DISTR	1761	
11.0 HYDRAULICS AND SURFACE CONTROLS	4264	
13.0 AVIONICS	1984	
14.0 ENVIRONMENTAL CONTROL	1755	
15.0 PERSONNEL PROVISIONS	763	
16.0 MARGIN	8852	
DRY WEIGHT	120908	266,558
17.0 PERSONNEL	1290	
19.0 RESIDUAL FLUIDS	9391	
LANDED WEIGHT W/O CARGO	131589	
20.0 CARGO (RETURNED)	33464	73,709
LANDED WEIGHT	165053	
ENTRY WEIGHT	165053	363,881
23.0 ACPS PROPELLANT		
RCS	3417	
OMS	11009	
24.0 CARGO DELIVERED MINUS CARGO RETURNED	0	
25.0 ASCENT RESERVES	4334	
26.0 INFLIGHT LOSSES	1401	
27.0 ASCENT PROPELLANT*	1,444,772	
RP-1 (219978) LOX (632439)		
LH_2 (92555) LOX (499800)		
GROSS LIFT-OFF WEIGHT	1,629,987	3,593,507

*MASS in Kg

TABLE II.- SELECTED BASELINE PROPULSION SYSTEM DATA

ITEM	ENGINE TYPE	
	MODE I	MODE II
N (NO. ENGINES)	7	3
P_c, MEGA-PASCALS (PSIA)	27.6 (4,000)	20.7 (3,000)
T_{SLS}, MEGA-NEWTONS (LBF)	2.3 (530,000)	1.8 (393,000)
T_{VAC}, MEGA-NEWTONS (LBF)	2.5 (563,205)	2.2 (500,000)
ε_1	40	40
ε_2	-	135.7
L_e, METERS (INCHES)	3.2 (126)	3.2 (126)
D_p PUMP ENVELOPE, METERS (INCHES)	2.0 (76.6)	2.4 (94.5)
D_{e1} EXIT DIA, METERS (INCHES)	1.7 (66)	1.7 (66)
D_{e2} EXIT DIA OF 2ND EXP., METERS (INS.)	-	3.1 (121)
BURN TIME, SEC	165	422*

*If no engines are shut down for a 30 m/sec^2 (3g) acceleration limit.

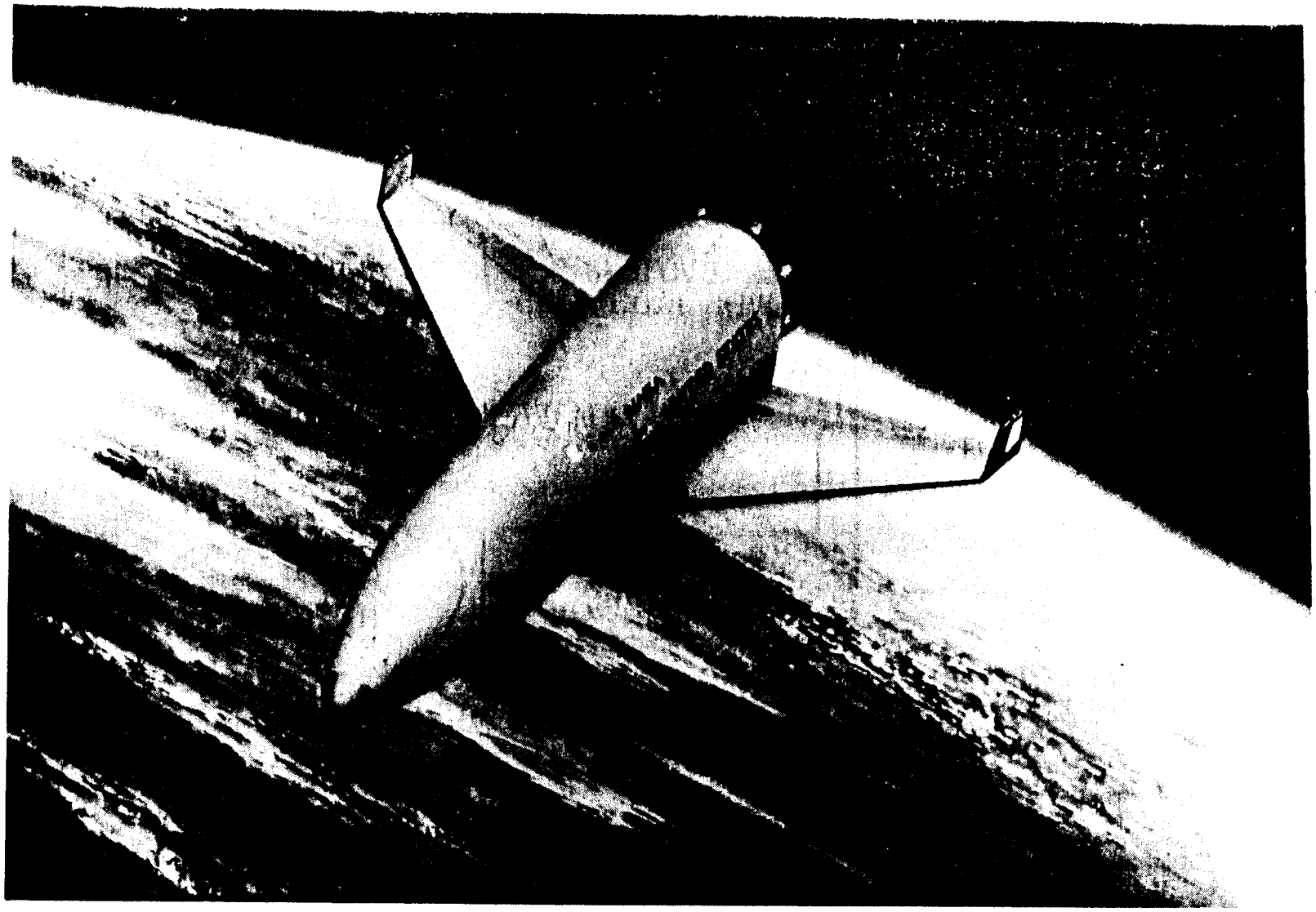

Fig. 1. - A single-stage Earth-to-orbit transport configured for low structural mass.

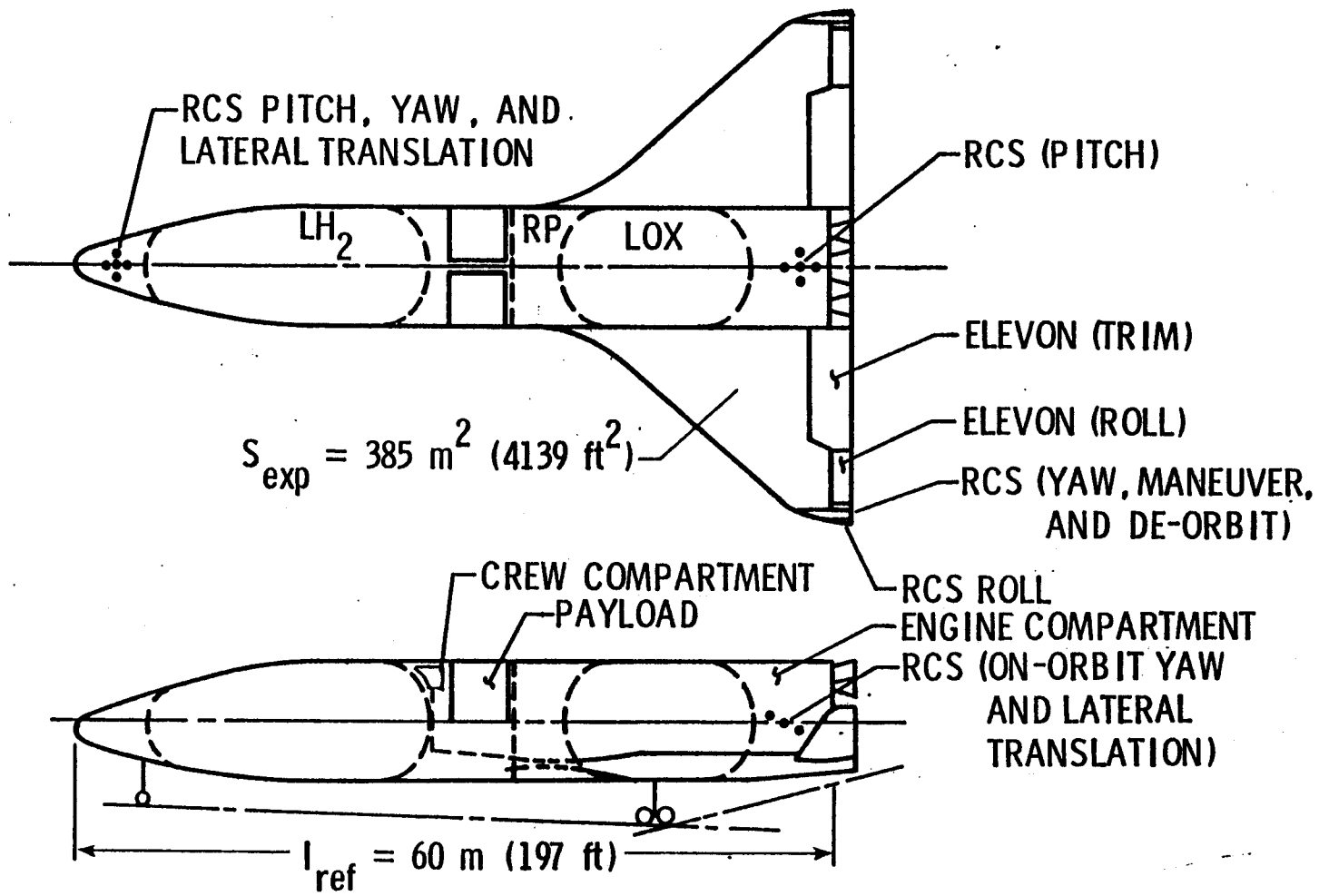

Fig. 2. - Inboard profile of vehicle showing tankage, reaction control system, and main engine locations.

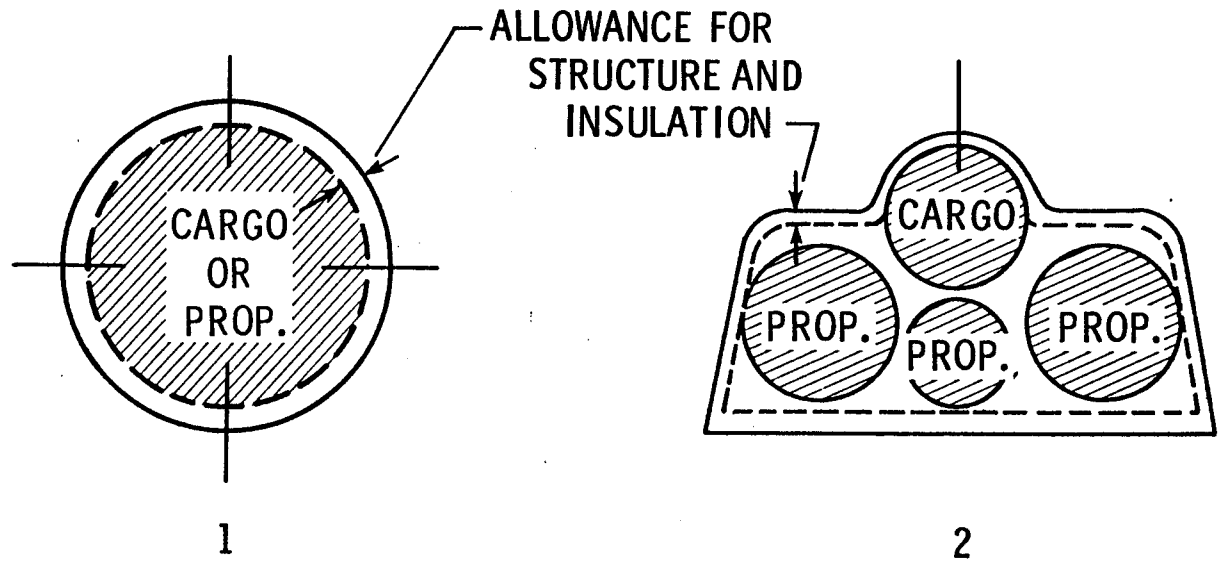

ITEM	CONFIGURATION	
	1	2
USEABLE CROSSECTION	682 m^2 (7332 ft^2)	682 m^2 (7332 ft^2)
STRUCTURAL MASS/UNIT LENGTH	866 kg/m (582 lb/ft)	2218 kg/m (1491 lb/ft)

FIG. 3. - Comparison of structural masses of conventional and simplified body shapes.

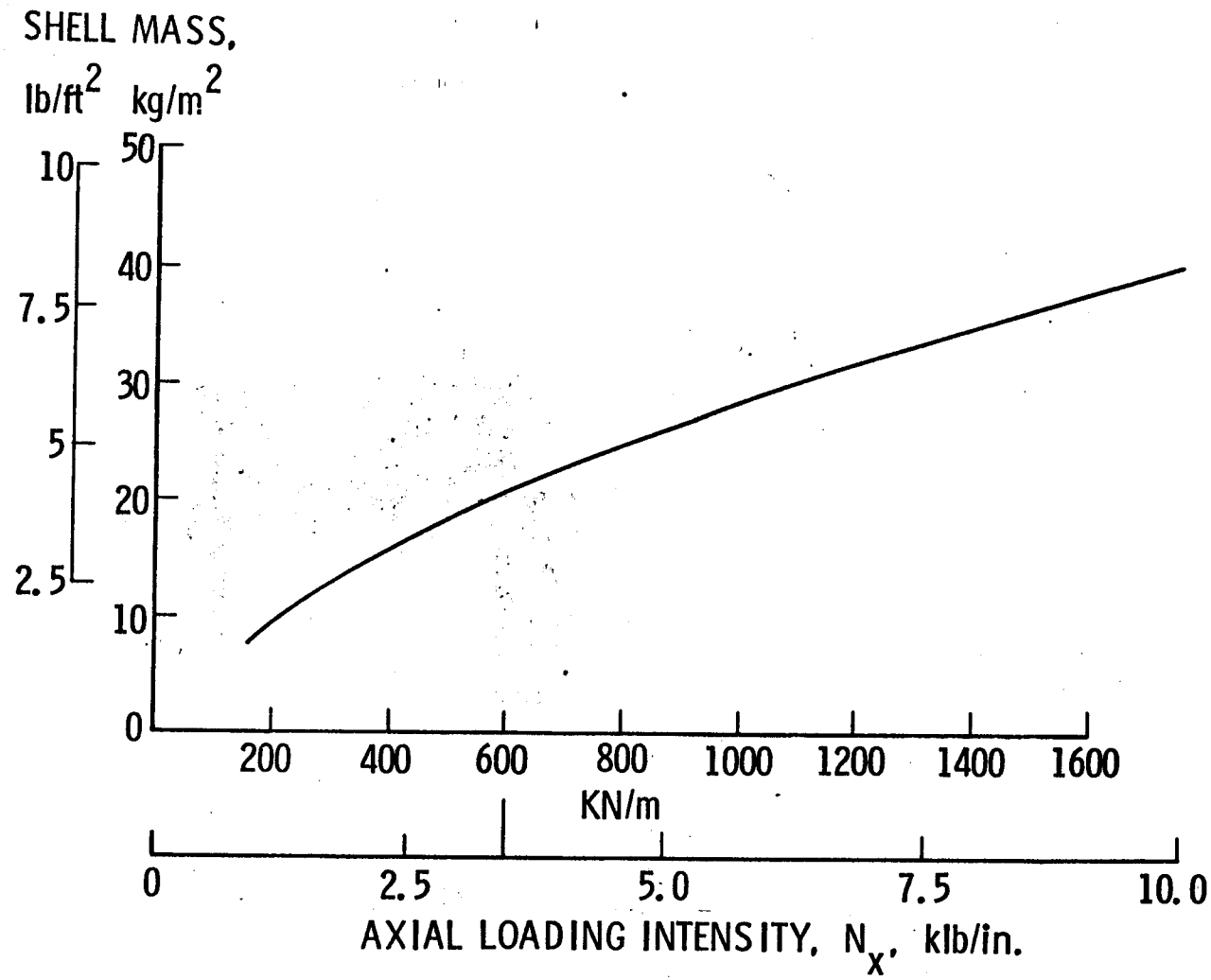

Fig. 4 - Body shell unit mass versus axial loading intensity.

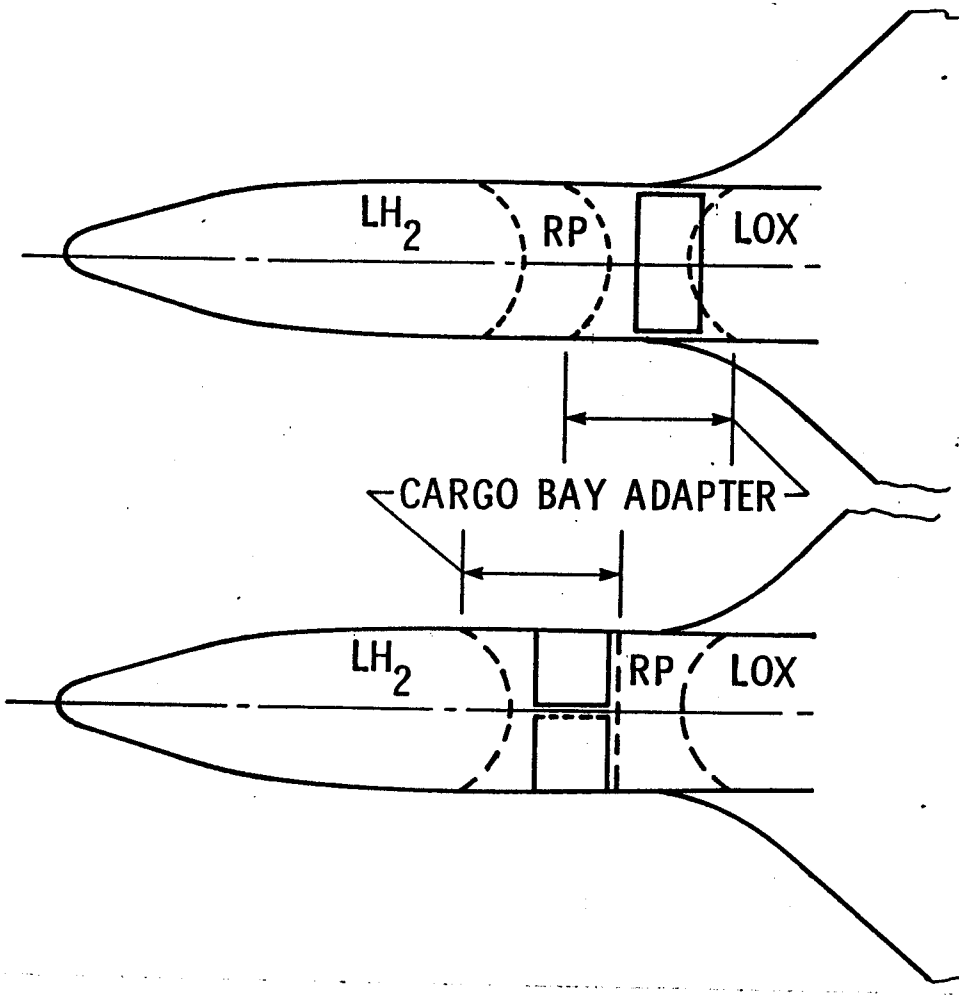

WT SAVINGS (RP AFT)

	kg	lbs
RP FUEL CELL	2131	4698
CARGO BAY ADAPTER	1350	2977
TOTAL	3481	7675

Fig. 5. - Structural weight savings with RP fuel placed aft of cargo bay.

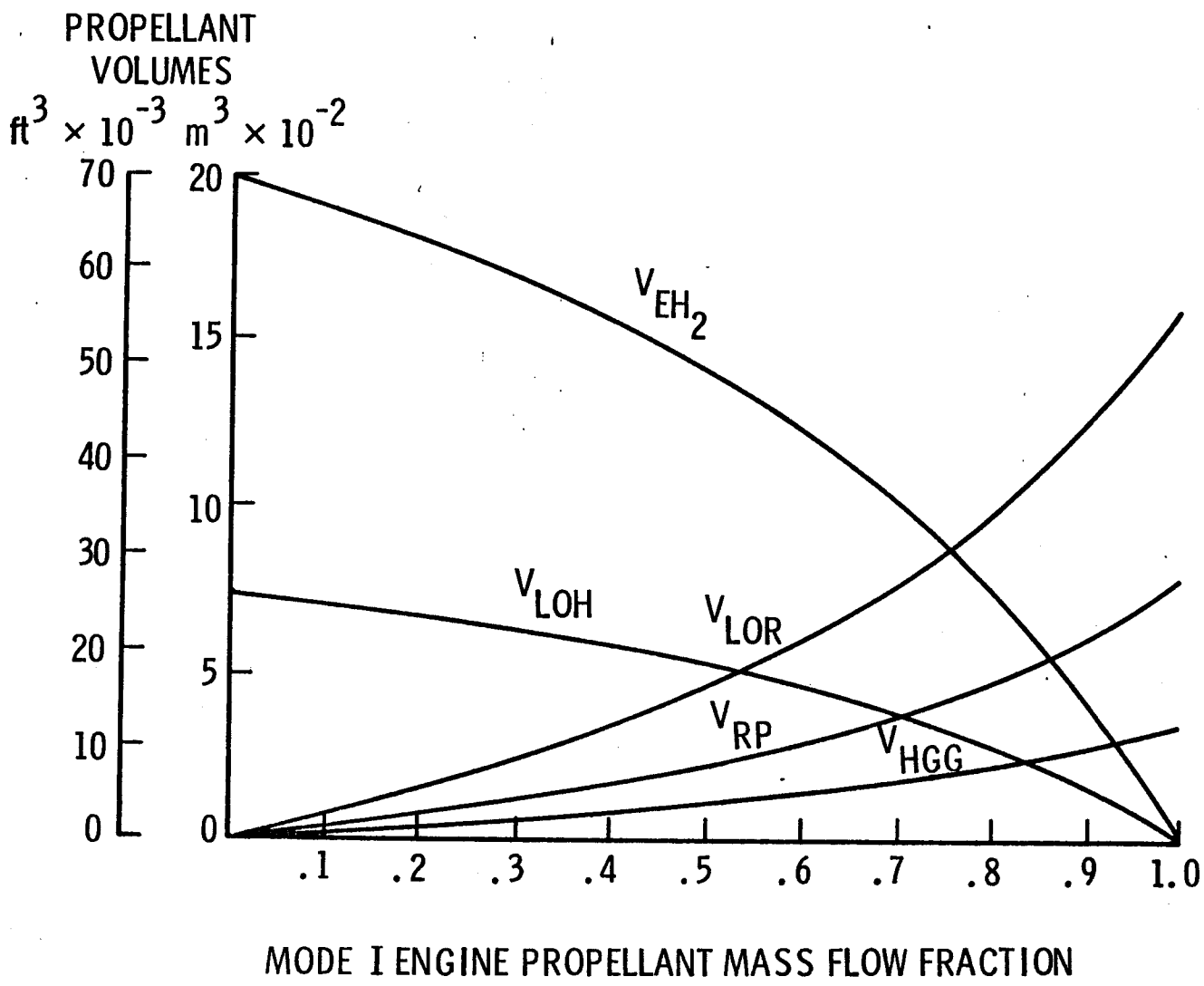

Fig. 6. - Tank volume requirements for various propellant mass splits.

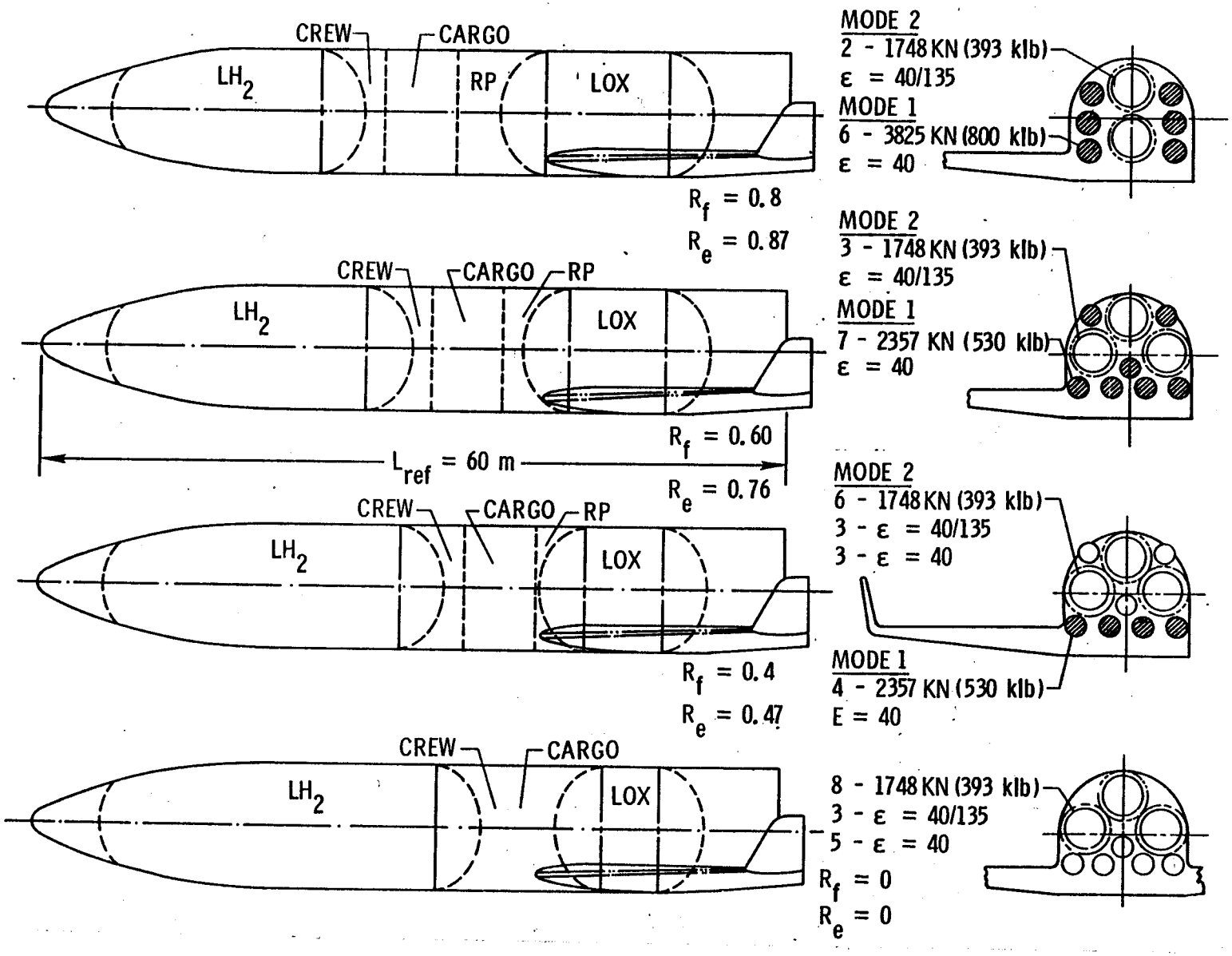

Fig. 7. - Trends in tankage and propulsion system for various propellant mass splits.

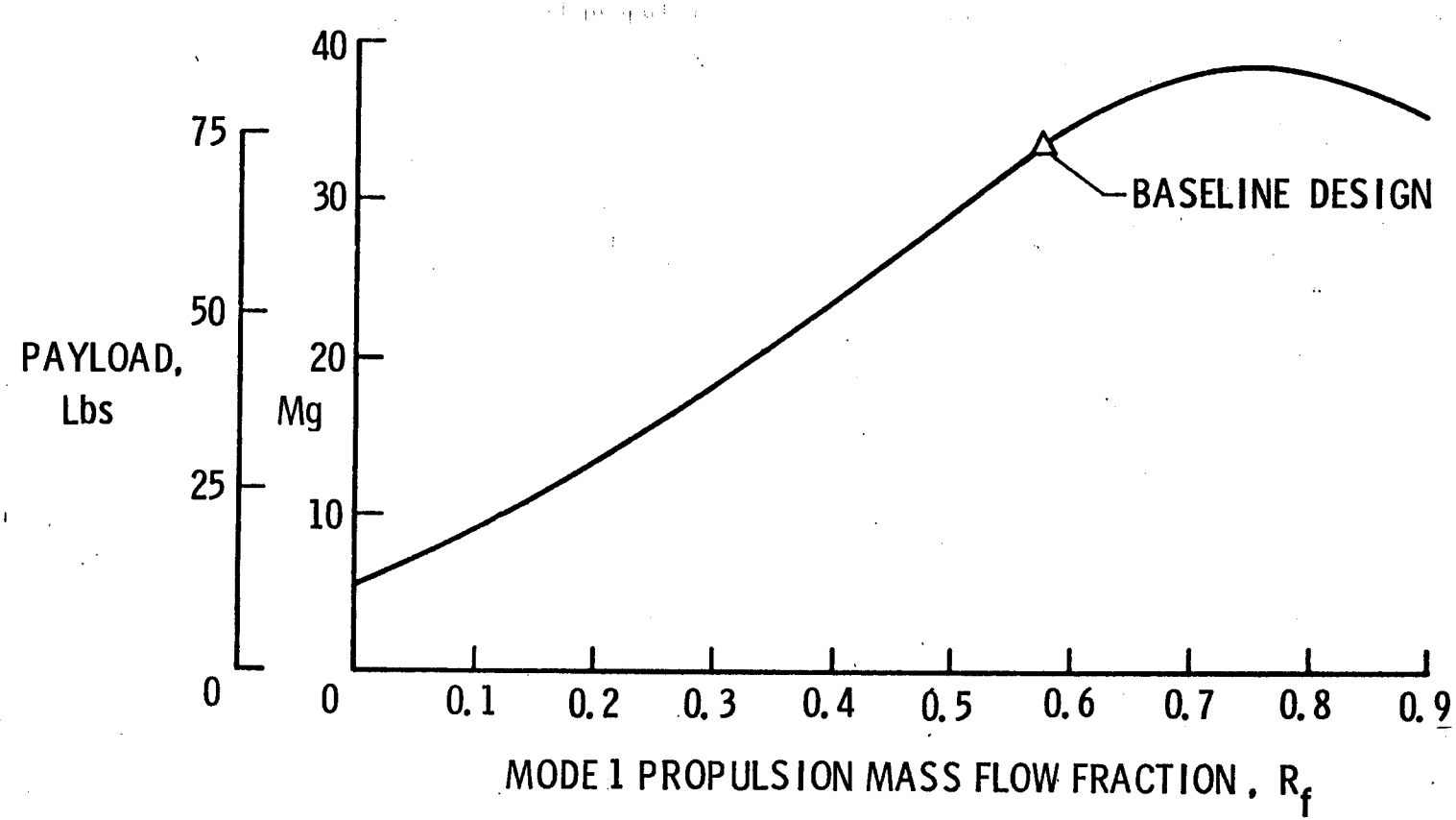

Fig. 8. - Payload delivered to orbit versus propellant mass split.

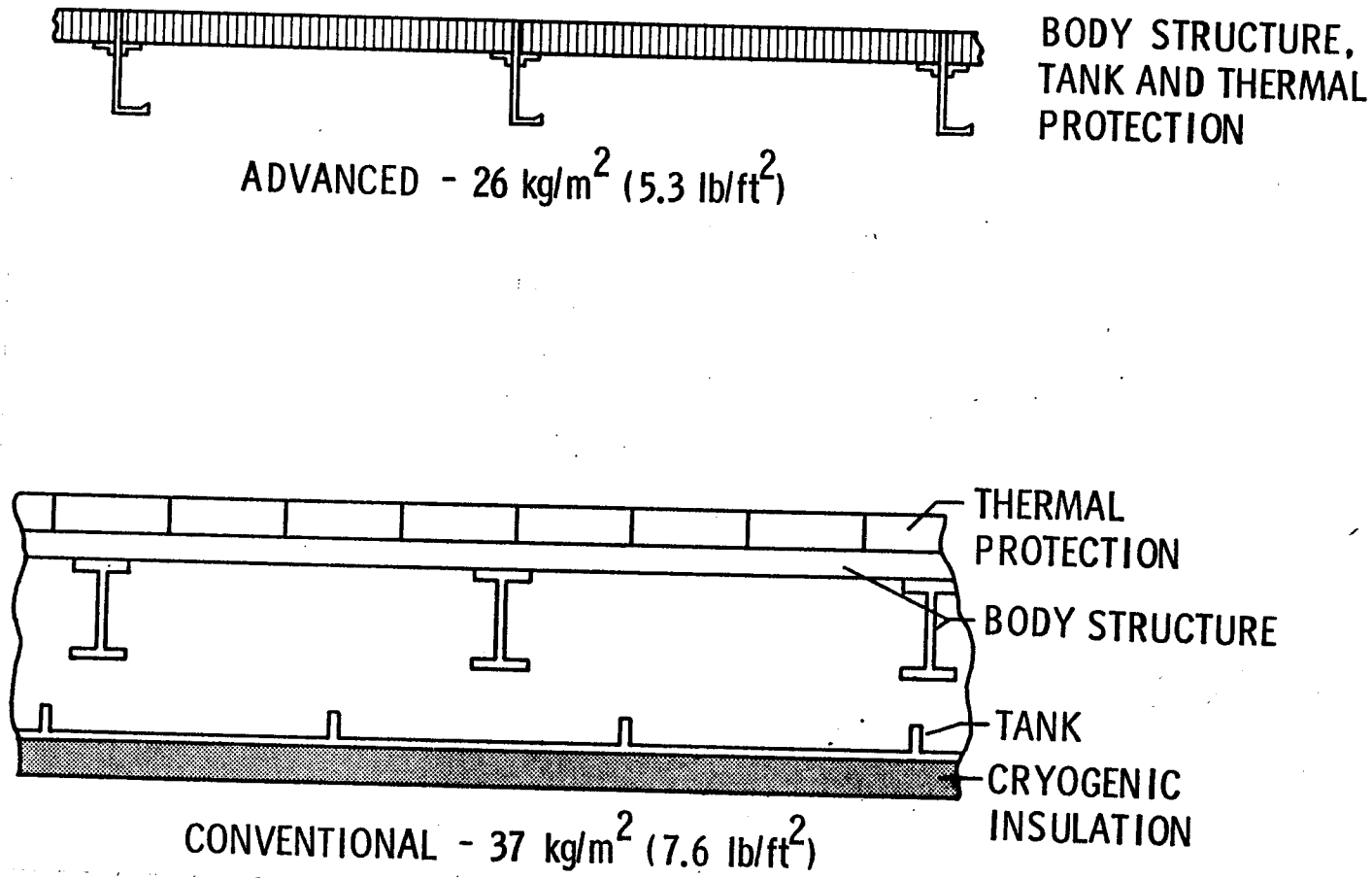

Fig. 9. - Weight comparisons for advanced and conventional forebody tank structure.

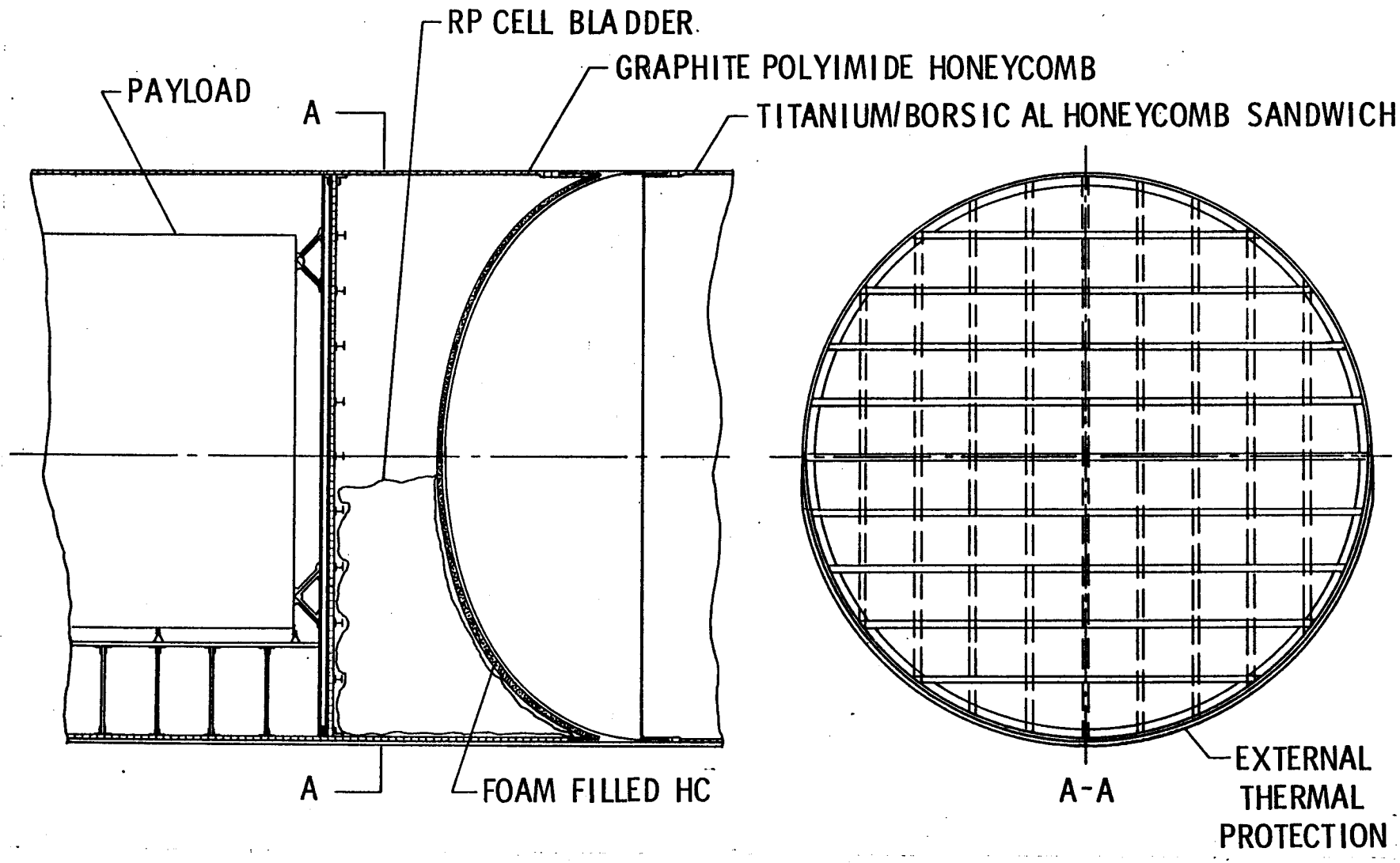

Fig. 10. - RP fuel cell.

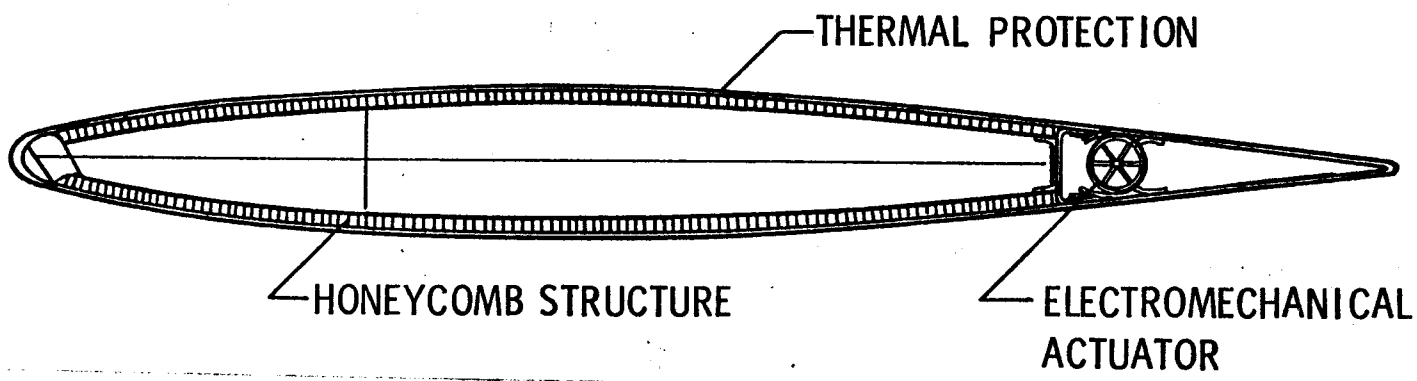

Fig. 11. - Advanced Dry wing structural concept.

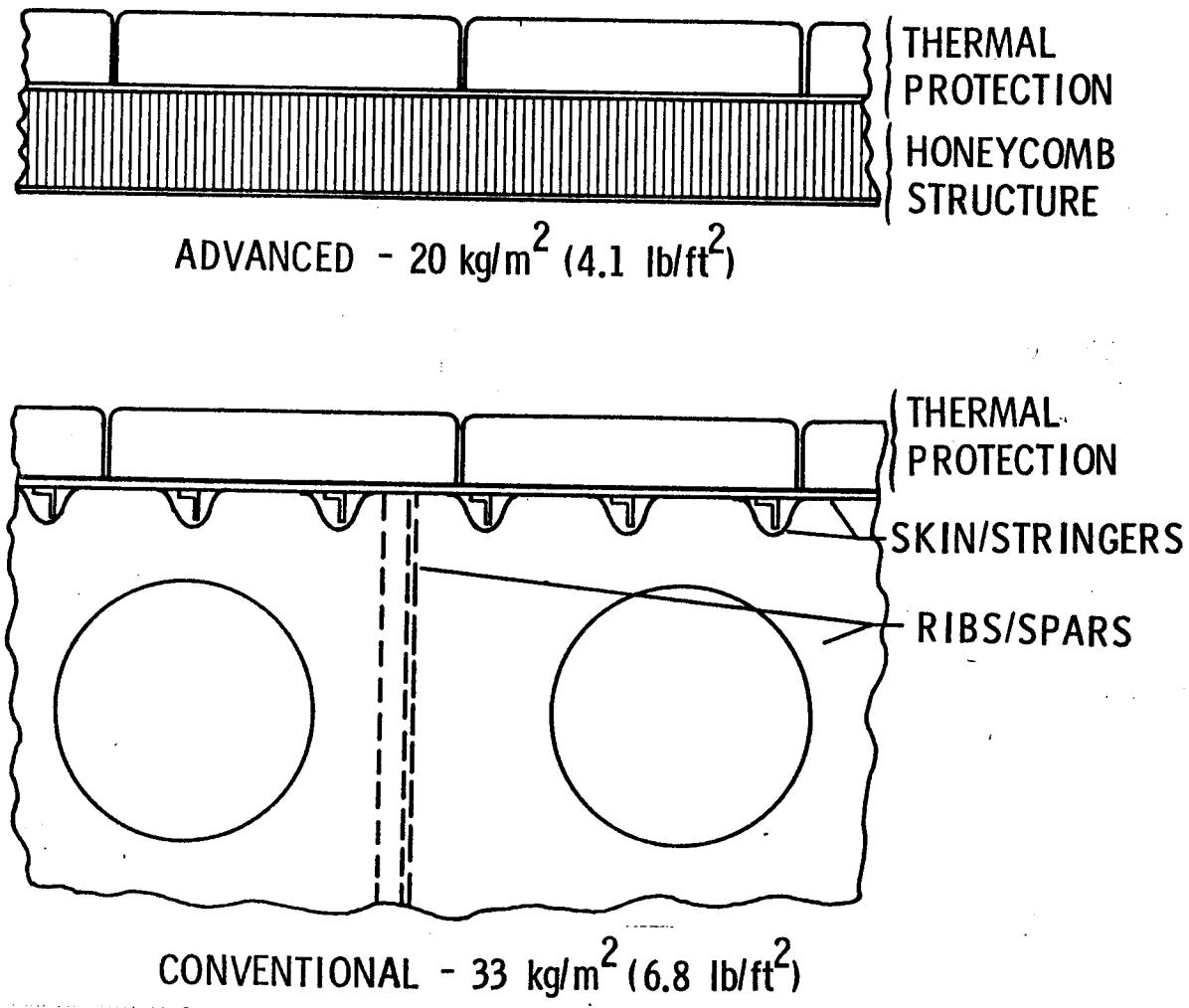

Fig. 12. - Comparison of advanced and conventional dry wing structural mass.