NASA Technical Memorandum 101498

A SPACE CRANE CONCEPT: PRELIMINARY DESIGN AND STATIC ANALYSIS

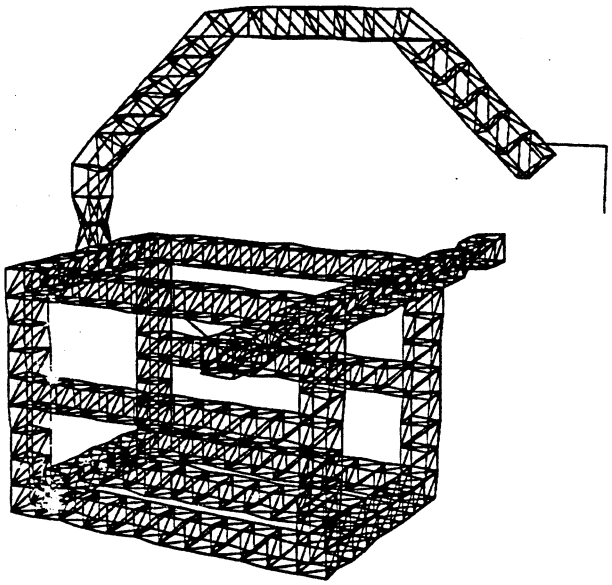

M. M. Mikulas, Jr., R. C. Davis, and W. H. Greene

November 1988

National Aeronautics and
Space Administration

Langley Research Center
Hampton, Virginia 23665

A SPACE CRANE CONCEPT: PRELIMINARY DESIGN AND STATIC ANALYSIS

Martin M. Mikulas, Jr., Robert C. Davis, and William H. Greene

INTRODUCTION

Future NASA missions such as a manned mission to Mars or to the Moon will require very large vehicles to be assembled in earth orbit (Reference 1). To assist in the assembly of these large vehicles, NASA is considering the use of a large construction facility in orbit. Such facilities are discussed in References 1 and 2, and one such concept is shown in Sketch 1. This facility would be constructed from the same truss structure as the Space Station Freedom, for which the individual struts are 5-meters long. The box portion of the framework shown in Sketch 1 would house the spacecraft being assembled. This particular framework has a 45-meter-square cross-section and is 60-meters long. The framework would likely be covered with a thin film to provide some environmental protection.

A large space crane is currently being considered as a tool to aid in the construction of the large spacecraft. One concept of a space crane is shown attached to an in-space construction facility in Sketch 2. The objective of this paper is to present an erectable space crane concept and results of an analysis which was conducted to understand the effects of the articulating joints on the cranes bending stiffness.

SPACE CRANE CONCEPT

The space crane concept considered in this paper is 95-meters in length and is shown in Figure 1. The crane consists of three six-bay boom sections connected to one another by offset hinges and attached to the construction facility with a rotary joint. This concept is an erectable 4-longeron truss beam with 19 5-meter-square truss bays. This concept was selected to be compatible with the space station truss as discussed in References 3 and 4. The space crane would be constructed using a mobile transporter such as is used on the space station and the mobile transporter with its own remote manipulator system (rms) would be left on the end of the space crane as an end effector. The cranes boom sections are rotated by extendible longeron actuators located along the top edge of the beam as shown in Figure 2.

MAN TENDED CO-ORBITING CONSTRUCTION FACILITY

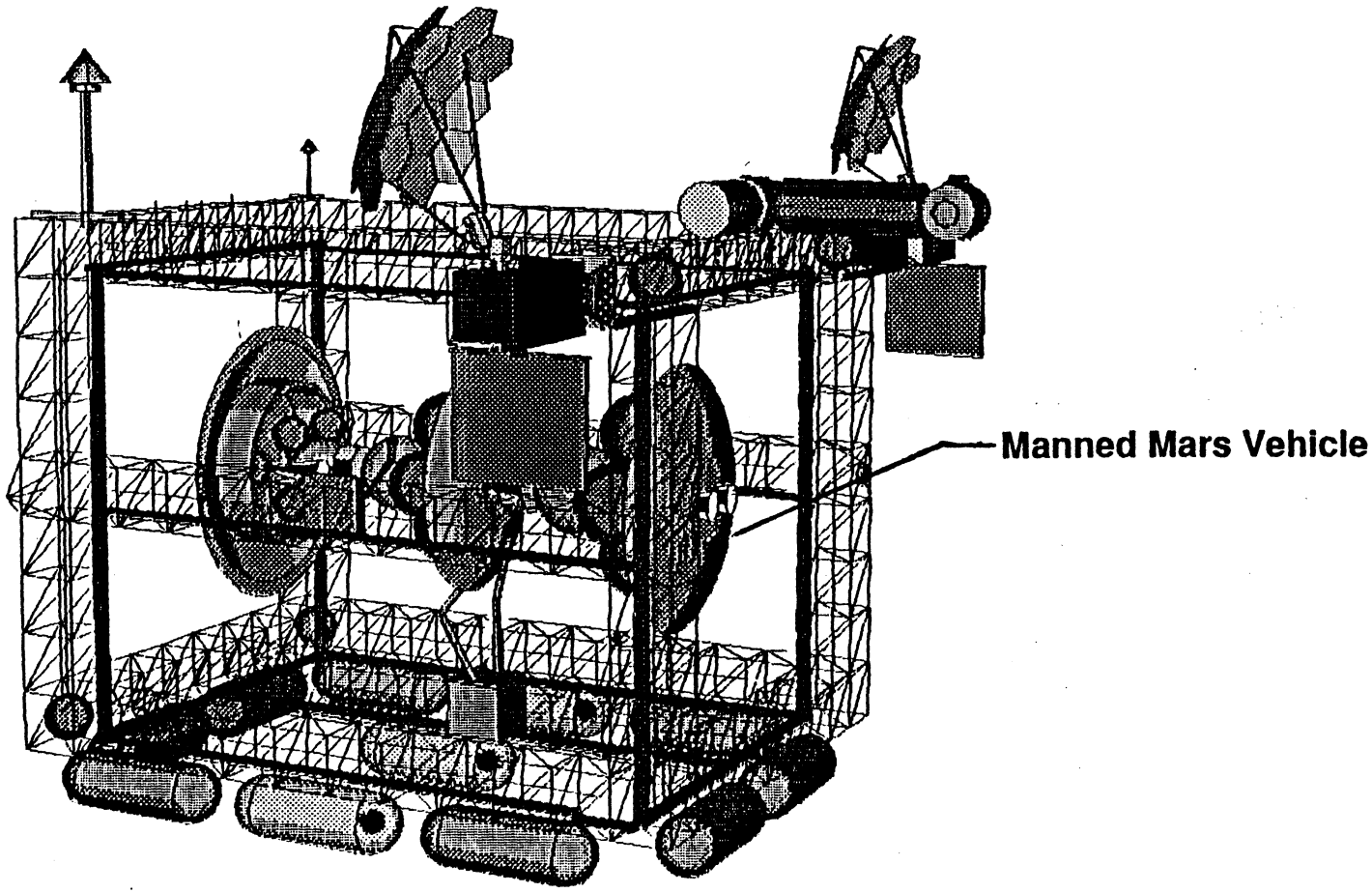

Sketch 1

SPACE CRANE ON CONSTRUCTION FACILITY

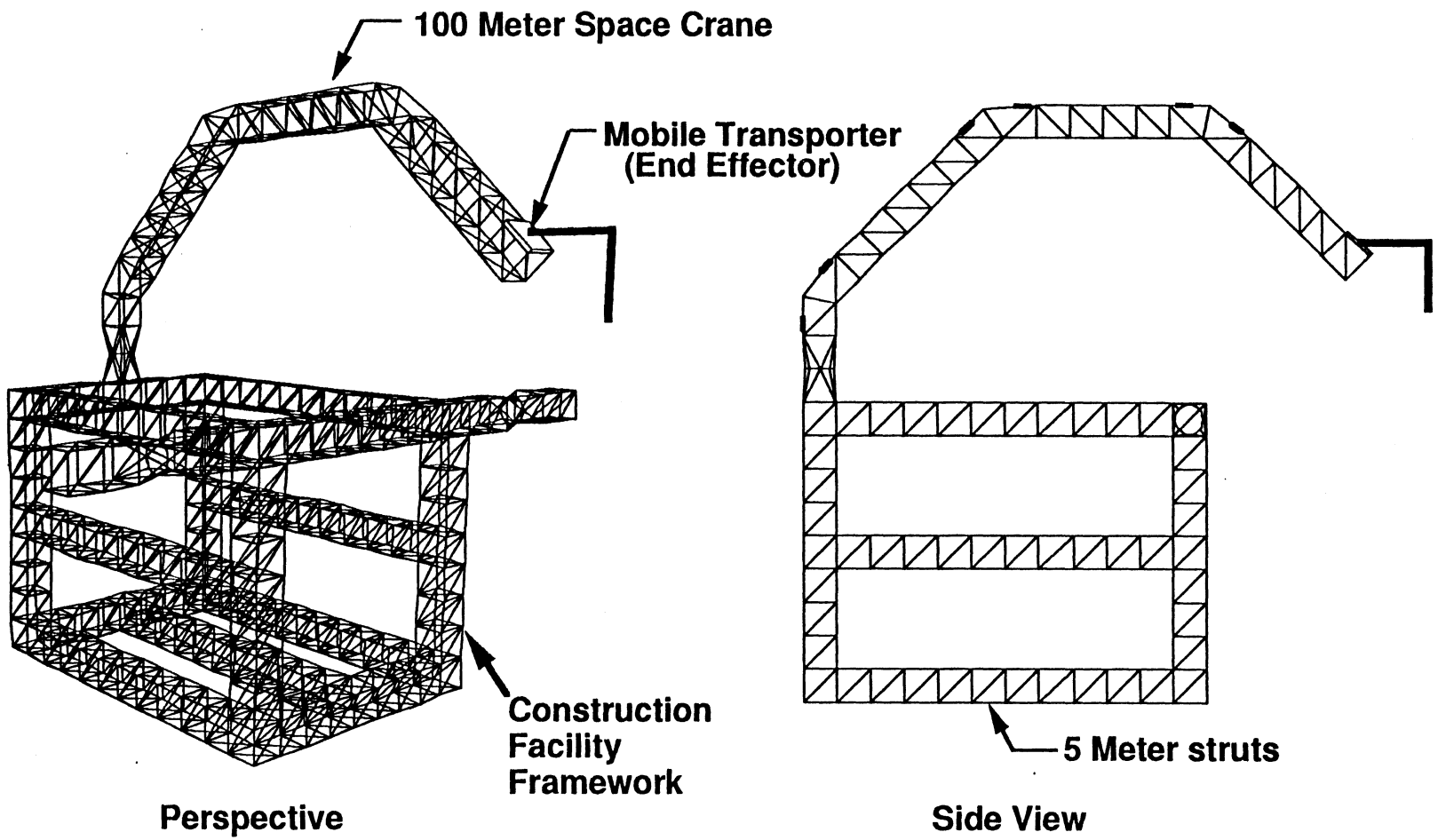

Sketch 2

The offset hinges shown, provide the capability to rotate the boom sections 180 degrees about the hinge line. This capability is desirable to maximize the reach envelope and dexterity of the crane. Such hinges, however, represent offsets in the truss load paths which introduce localized bending effects which in turn reduce the truss stiffness as well as cause high local stresses. The offset hinge concept is shown in Figure 3. This offset hinge arrangement allows the vertical batten to rotate independent of the truss bays. The vertical battens are also pinned at the other end to permit the actuated upper longerons to extend without a bending restraint.

FINITE ELEMENT MODEL

The finite element model for the space crane concept is shown in Figures 4a and 4b. For purposes of analysis, the crane was considered to be straight in all cases. The space crane concept uses a total of 12 actuated longerons, 4 between each of the 3 boom sections. The remaining longerons and all of the battens are 5-meters (196.85 inches) in length, and all diagonal members have a length of 7.071 meters (278.39 inches). The truss struts are modeled with beam elements representing graphite epoxy tubes having an outside diameter of 2 inches, a wall thickness of 0.06 inches, a Young's modulus of 40×10^6 lbf/in^2, and a density of 0.063 lbm/in^3. The hinge joints were offset from the longeron neutral axis using rigid members. The accuracy of this rigid member approximation was checked by comparing the computed results from a finite element model with values obtained from conventional beam theory calculations. Results of this study are shown in Table 1.

ANALYSIS RESULTS

Crane Tip Deflections

In this analysis a study is made of the effect of hinge offset length on crane bending stiffness. To accomplish this, the crane was clamped at one end and loaded at the other as a point load on the end of a cantilevered beam. The results of this study are shown in Figure 5. In this figure, P is the tip load at the end of the crane, Y is the crane tip deflection with a hinge offset, and Yo is the crane tip deflection with no offset. For a cantilevered beam, the ratio P/Y is proportional to the beam bending stiffness. For that reason, the ordinate in Figure 5 represents the decrease in crane bending stiffness as a function of hinge offset length. To achieve a full 180-degree

rotation capability for this truss which has 2-inch diameter struts, the hinge offset would have to be at least 1 inch and possibly as much as 2 inches. It can be seen in Figure 5 that a 1-inch offset only reduces the crane bending stiffness by about 6 percent which does not seem to be too bad. However, a 2-inch offset reduces the crane's bending stiffness by almost 20 percent which is quite a large reduction. For dynamics and control reasons it is not desirable for the crane to be highly flexible so two methods for reducing tip deflections were investigated. The first method, denoted Method A, is shown in Figure 6 and consists of doubling the outer diameter and doubling the wall thickness of a longeron on one side of each offset hinge. The area moment of inertia of these longerons is increased by a factor of 16. The results show that method of stiffening will provide 95 percent of the 0-offset stiffness for a crane with 2-inch offset hinges. The second method, denoted Method B, is also shown in Figure 6 and consists of doubling the outer diameter (but not the wall thickness) of the longerons on both sides of each offset hinge. This raises the longeron area moment of inertia by a factor of 8. As can be seen in Figure 6, Method B actually increases the crane bending stiffness by 6 percent for a 2-inch hinge offset and provides full crane bending stiffness for even a 3-inch hinge offset. Since maintaining a uniform longeron diameter throughout the structure may be desirable, the increasing in longeron moment of inertia could be obtained by increasing the longeron wall thickness. None of these approaches represent large percentage weight penalties since so few longerons are being increased. Thus it appears that providing hinge offsets for increased crane mobility does not represent a severe structural penalty in terms of either stiffness or weight.

Member Stresses

In Figure 7, stresses in truss members are plotted as a function of offset length for the nominal and stiffened Method B cases. The plots show the maximum stresses in truss bays 2 and 3, normalized to the maximum 0-offset stress in bay 2 of the nominal structure. Truss bays 1, 2, and 3 are of significance because the truss members in bays 1 and 2 are among the most highly stressed members in the structure and because bays 1, 2, and 3 represent adjacent stiffened and nominal bays in the model employing Method B stiffening. Analysis results showed that Method A stiffening has little effect on lowering the maximum stresses in the structure, since the stresses on either side of an offset hinge are nearly identical and since Method A replaces the tubes on only one side of each hinge joint.

In Figure 7a, the stress ratio in the lower longerons is shown as a function of the hinge offset length for the stiffened and nominal cases. The lower longerons in bay 2, along with the corresponding bay 1 longerons, carry the highest stresses in the model. The increase in member stress due to the hinge offsets is linear. Stiffening by Method B cuts this increase in stress by more than 50 percent. Stresses in the nominal longerons of the adjacent truss bay (bay 3) rise slightly as the load is transferred from the stiffened members but still remain relatively low.

The stress ratio in the diagonal members as a function of offset length are shown in Figure 7b. This plot shows that the diagonals experience a significant increase in stress as a result of offsetting the hinge joints. Initially, the diagonals are lightly loaded, and the increase in stress shown only raises the maximum absolute stress in these members to about half the level of stress carried by the longerons. Method B stiffening cuts the stress increase in the bay 2 diagonals by almost 75 percent, while causing insignificant stress changes in the bay 3 diagonals.

CONCLUDING REMARKS

An erectable space crane concept was presented and analyzed for stiffness and strength. The crane was designed with three rotating sections to improve its dexterity. The rotating sections were connected to each other using offset hinges to provide full 180-degree rotation capability. A static analysis was performed using a finite element code to model the space crane in its fully-extended position. Point forces were applied to the crane tip to represent an operational type load. The decrease in crane bending stiffness, and increase in local stresses were calculated as a function of hinge offset length.

The results of the analysis showed that the space crane exhibits approximately a 5 percent decrease in overall bending stiffness with the hinges offset by 1 inch, a 20 percent decrease with 2-inch offsets, and a 35 percent decrease with 3-inch offsets. Further analysis showed that the original stiffness of the structure could be easily restored by increasing the size of the longerons on either side of each of the crane's six offset hinges.

The stresses observed in the most highly stressed truss members in the structure increase linearly as a function of hinge offset length. With 3-inch offsets, the maximum stress in the longerons was 4.25 times as high as the maximum stress with no offsets, and the maximum stress in the diagonal members increased by a factor of 25.8. However, these diagonals were initially so lightly loaded that this increase still left the maximum stresses only half as large as those in the corresponding longerons. Stiffening the structure by doubling the tube outer diameter on either side of each offset reduced the stresses to 1.87 and 6.79 times their initial value in the longerons and diagonals, respectively. Additional finite element analysis showed that stiffening the diagonals and battens in addition to the longerons led to relatively little improvement over stiffening the longerons alone.

REFERENCES

1. Cirillo, William M.; Kaszubowski, Martin J.; Ayers, J. Kirk; Llewellyn, Charles P.; Weidman, Deene J.; and Meredith, Barry D.: Manned Mars Mission Accommodation - Sprint Mission. NASA TM-100598, April 1988.

2. Weidman, Deene J.; Cirillo, William M.; Llewellyn, Charles P.; Kaszubowski, Martin J.; and Kienlen, E. Michael, Jr.: Space Station Accommodations for Lunar Base Elements - A Study. NASA TM-100501, October 1987.

3. Mikulas, Martin M., Jr., et al: Deployable/Erectable Trade Study for Space Station Truss Structures. NASA TM-87573, July 1985.

4. Mikulas, Martin M., Jr. and Bush, Harold G.: Design, Construction and Utilization of a Space Station Assembled from 5-Meter Erectable Struts. NASA TM-89043, October 1986.

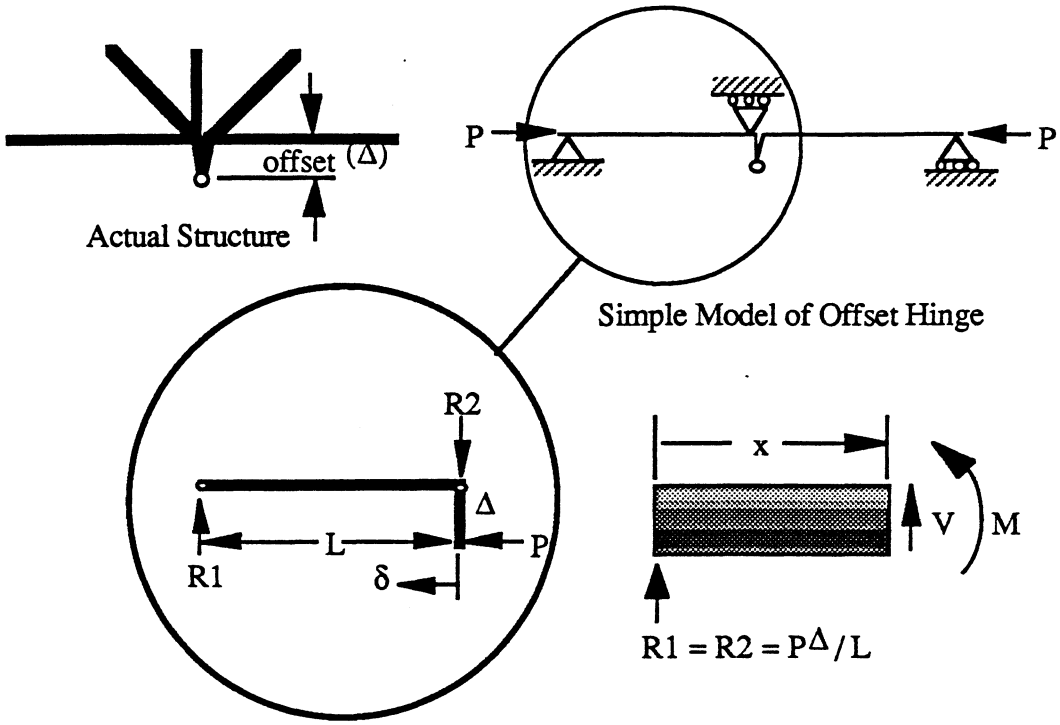

δ = deflection due to axial load + deflection due to bending = $\delta_a + \delta_b$

$\delta_a = P/A$

$M = P\Delta x/L$

$d^2\delta_b/dx^2 = M/EI = P\Delta x/EIL$

$d\delta_b/dx = P\Delta x^2/2EIL - P\Delta L/6EI$

$\delta_b = P\Delta x^3/6EIL - P\Delta Lx/6EI$

P = 100 lb. $\delta_a = P/A = 1.3458 \times 10^{-3}$ in.

Offset (Δ) in.	δ_b 10^{-3} in.	$\delta = \delta_b + \delta_a$ 10^{-3} in.	F.E. Model Output 10^{-3} in.
0.50	0.238	1.58	1.58
1.00	0.953	2.30	2.30
2.00	3.81	5.16	5.16
3.00	8.57	9.92	9.92

Table 1. - Test Model and Results for Offset Hinges

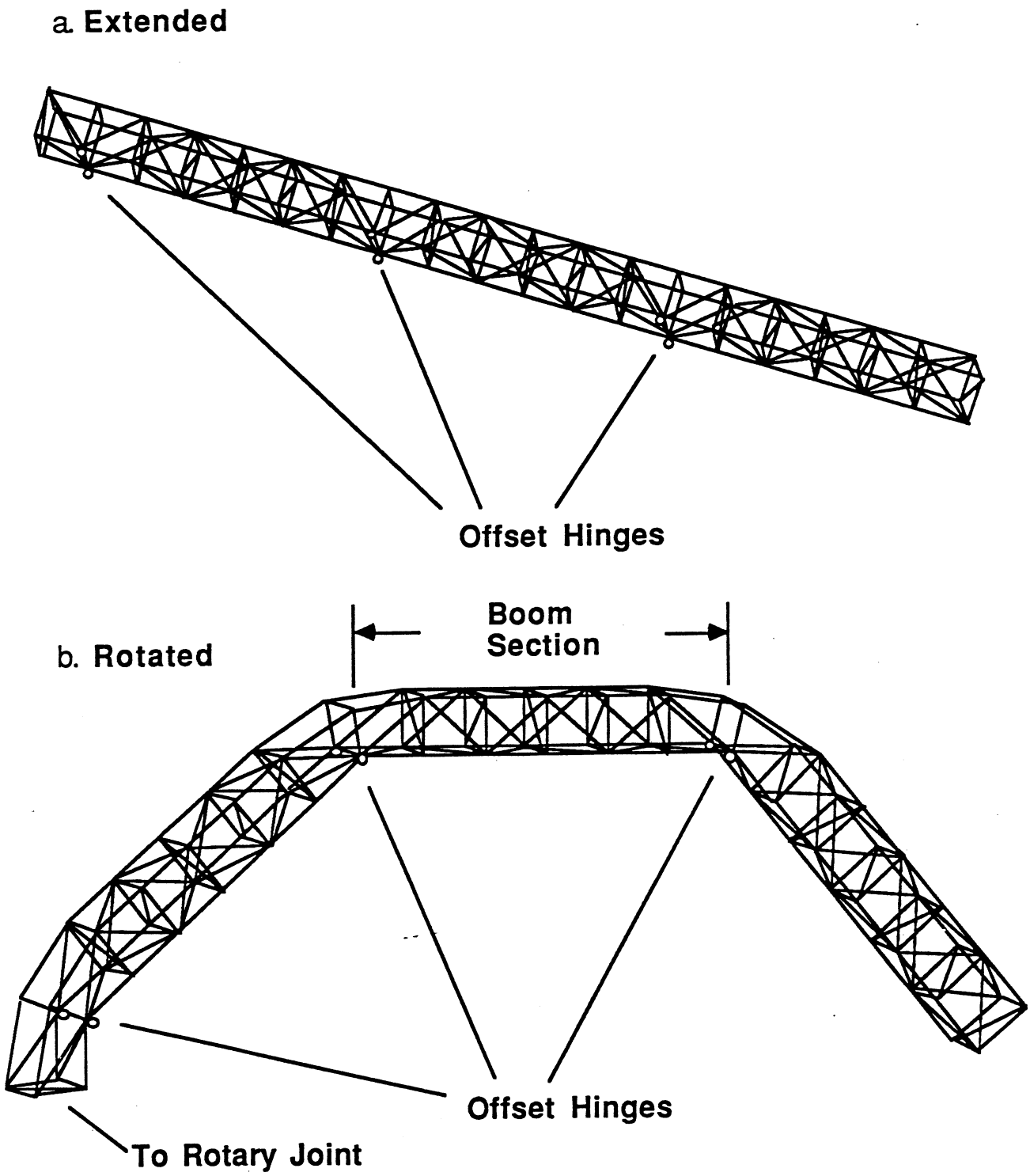

Figure 1. - Space Crane Concept

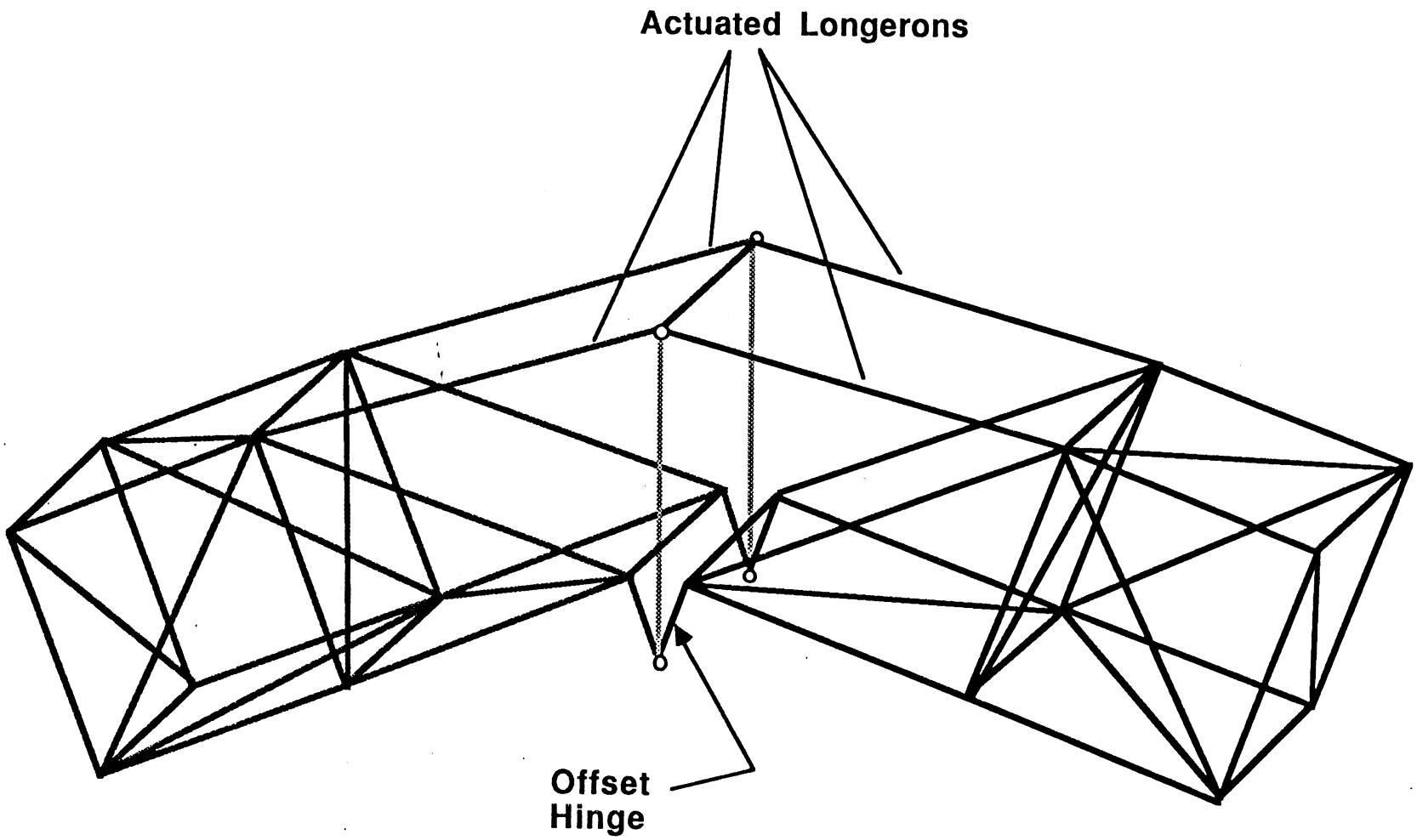

Figure 2. - Offset Hinge Configuration

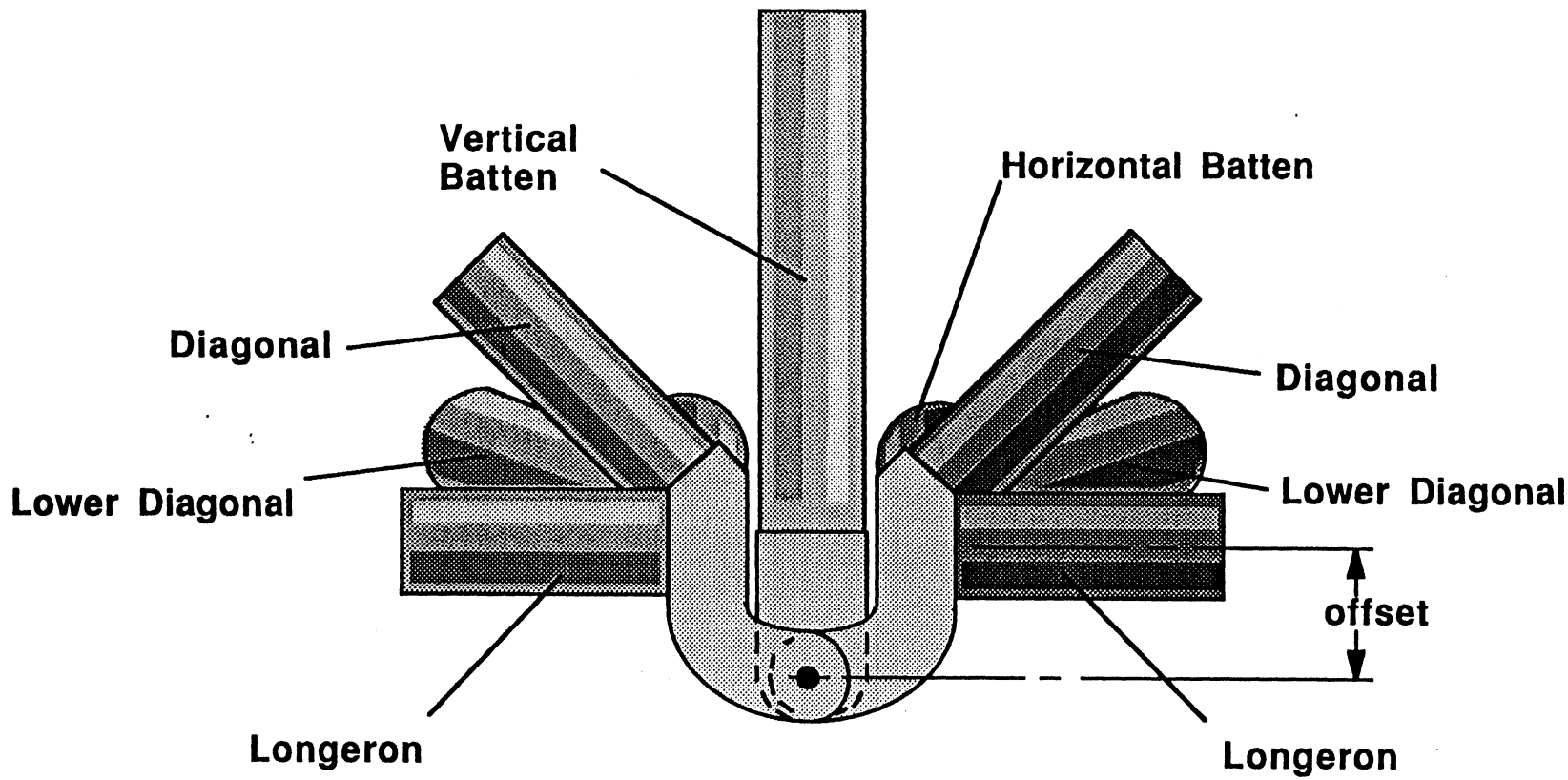

Figure 3. - Offset Hinge Detail

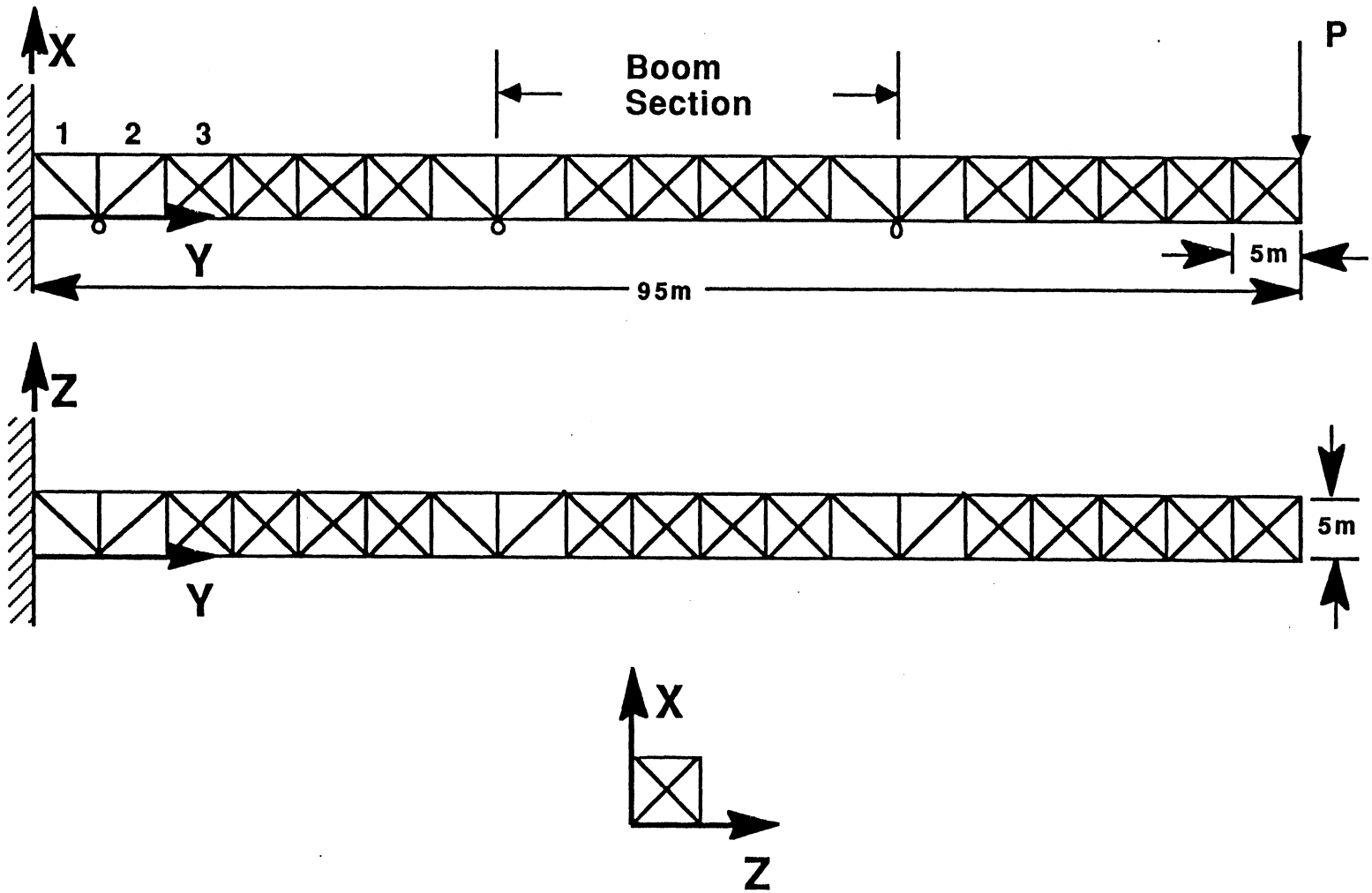

Figure 4a. - Space Crane Finite Element Model

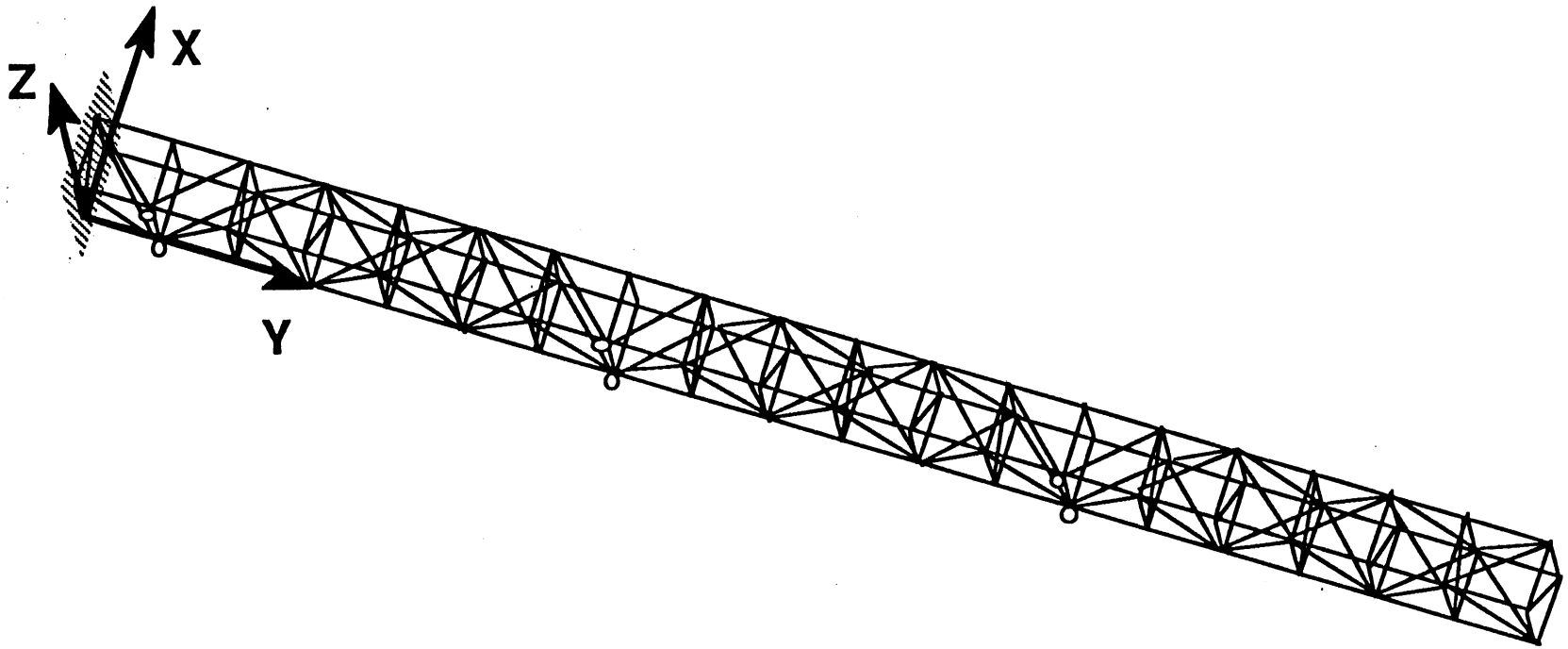

Figure 4b. - Perspective View of Space Crane Finite Element Model

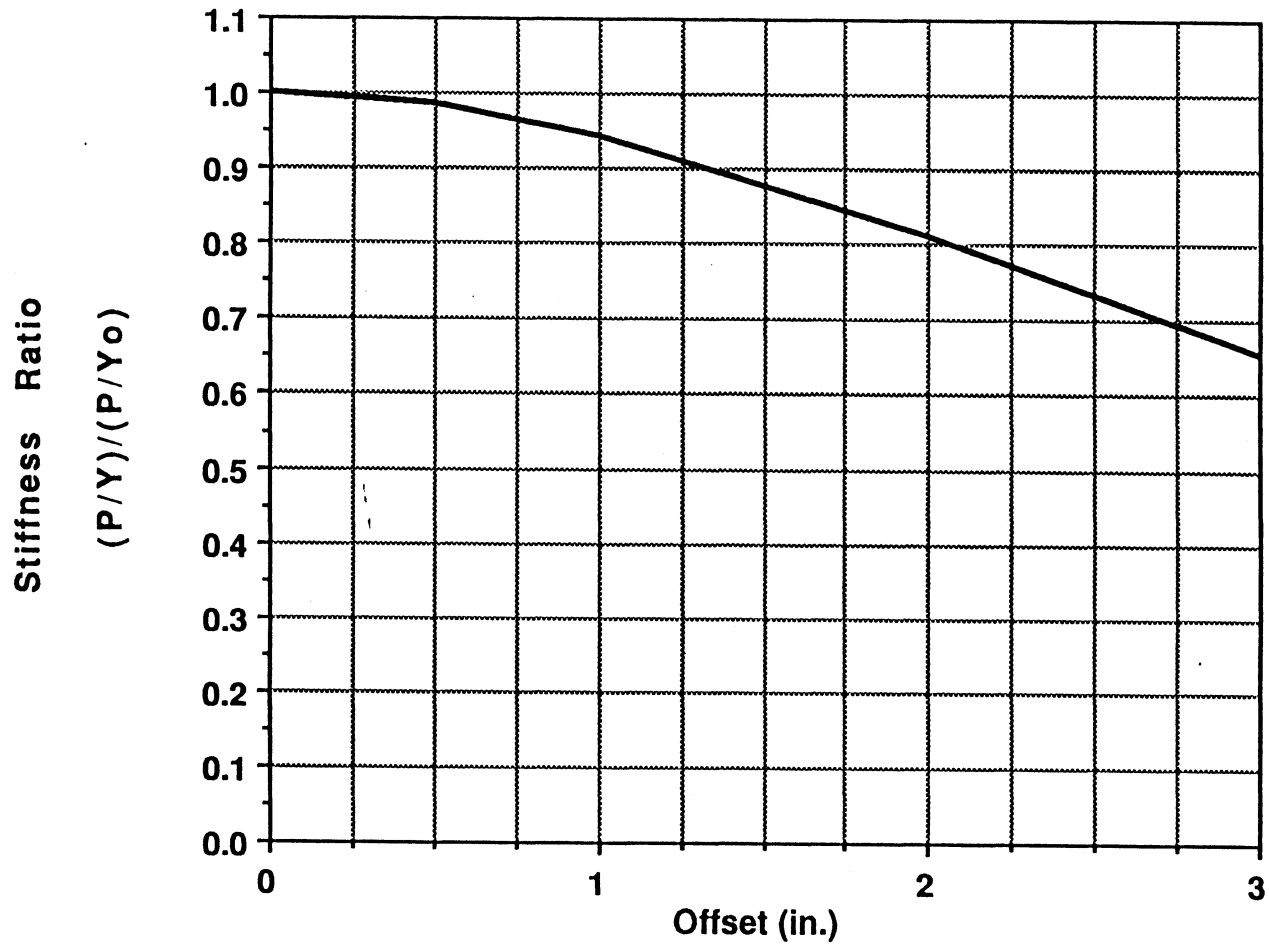

Y = Transverse Deflection at Tip Under Load P
Yo = Transverse Deflection Under Load P Without Offsets

Figure 5. Relative crane stiffness as a funtion of hinge offset length.

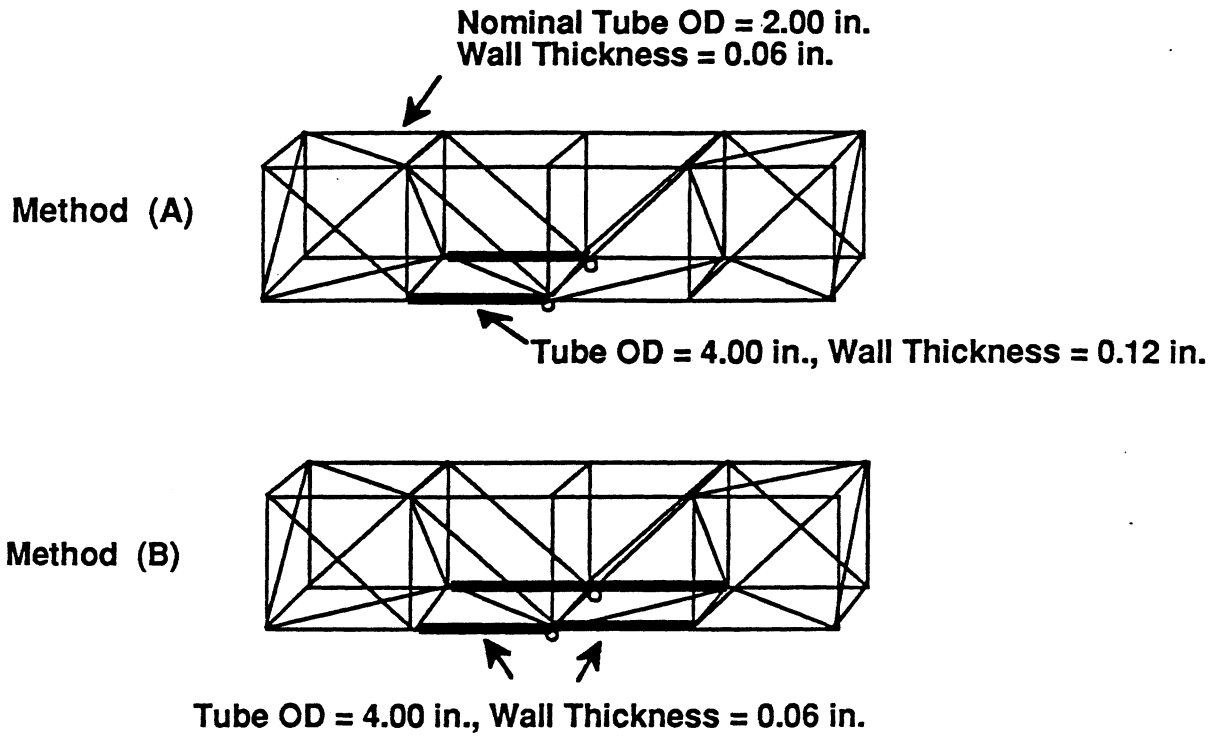

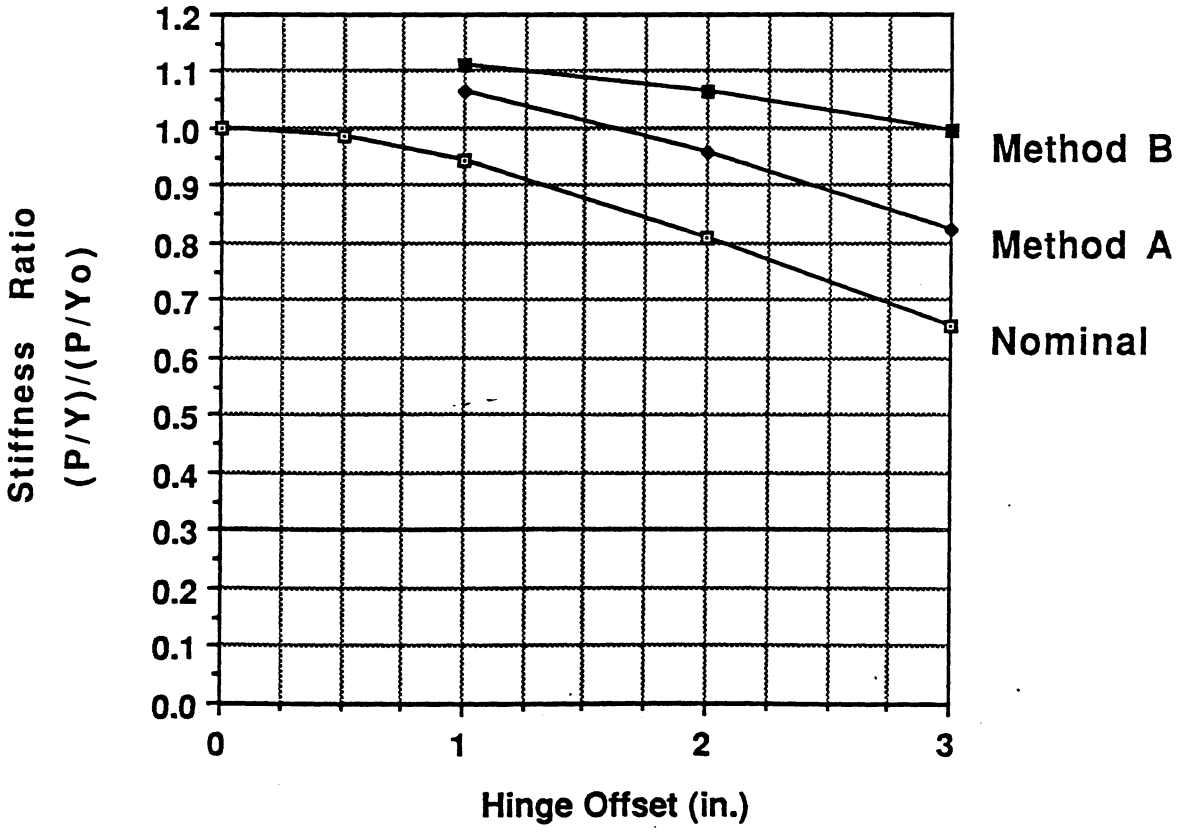

Figure 6.- Normalized bending stiffness of crane for different local stiffening methods.

(S)max = maximum stress in member

(S)o = maximum stress in member with zero-offset

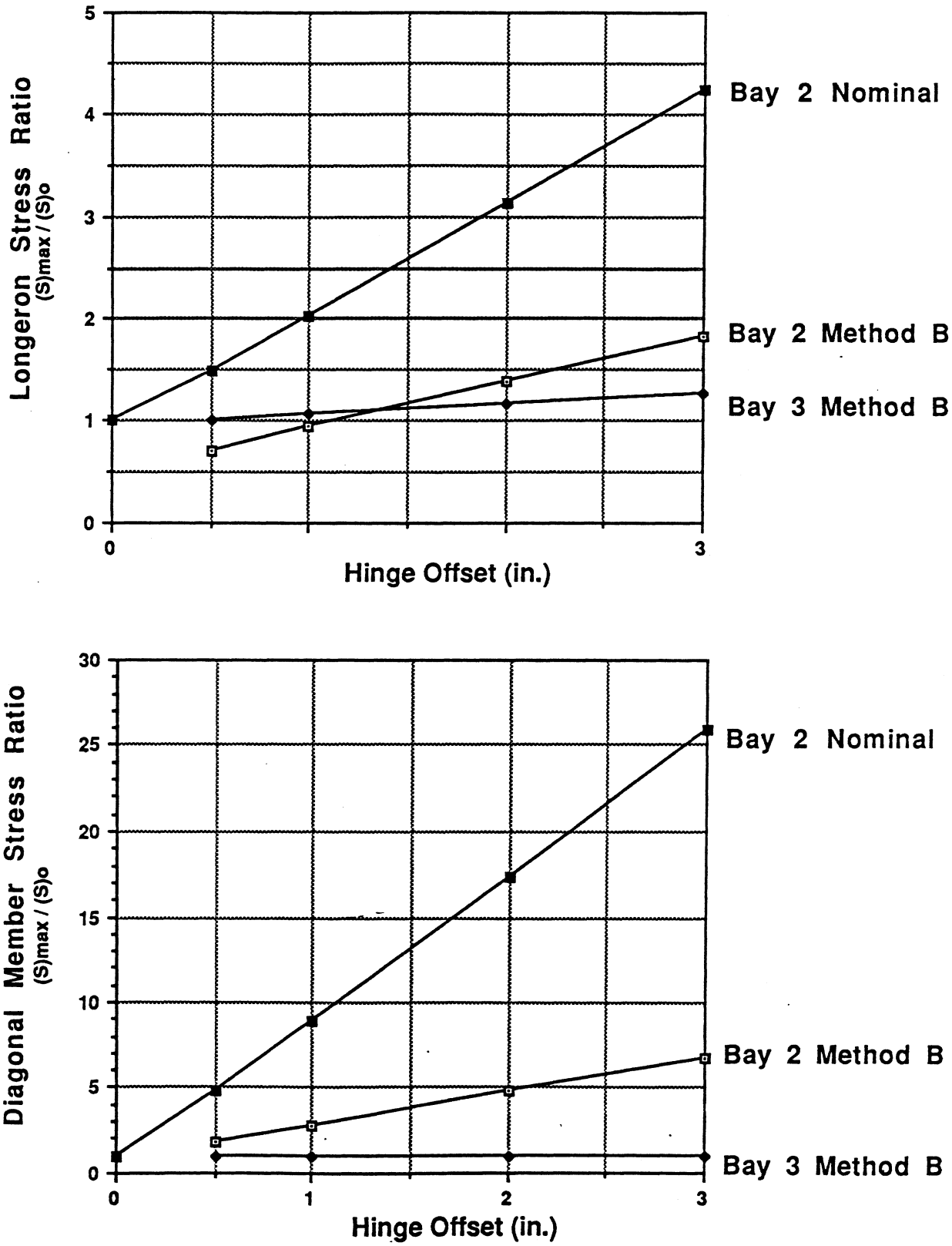

Figure 7.- Maximum member stress as a function of hinge offset length.

NASA
National Aeronautics and Space Administration

Report Documentation Page

1. Report No.	2. Government Accession No.	3. Recipient's Catalog No.
NASA TM-101498		

4. Title and Subtitle	5. Report Date
Static Analysis of a Space Crane Concept with Offset Hinges	November 1988
	6. Performing Organization Code
7. Author(s)	8. Performing Organization Report No.
Martin M. Mikulas, Jr., Robert C. Davis, and William H. Greene	10. Work Unit No. 506-43-41-02
9. Performing Organization Name and Address	11. Contract or Grant No.
NASA Langley Research Center Hampton, VA 23665-5225	13. Type of Report and Period Covered Technical Memorandum
12. Sponsoring Agency Name and Address	14. Sponsoring Agency Code
National Aeronautics and Space Administration Washington, DC 20546-0001	

15. Supplementary Notes

16. Abstract

Future in-space construction and assembly facilities will likely require the use of space cranes capable of supporting and manipulating large and massive loads. The large size of the space components being considered for construction will require that these cranes have a reach on the order of 100 meters. In this paper, a space crane constructed from an erectable four-longeron truss beam with 19 5-meter-square truss bays is considered. This concept was selected to be compatible with the space station truss. This truss is hinged at three locations along its bottom edge and attached at one end to a rotary joint cantilevered to the assembly depot's main truss structure. The crane's boom sections are rotated by extensible longeron actuators located along the top edge of the beam. To achieve maximum position maneuvering capability for the crane requires that the individual sections be capable of rotating 180 degrees about the hinge point. This can only be accomplished by offsetting the hinges from the longeron axes. Since offset hinges introduce bending moments in the truss members, an analysis of the effect of hinge offsets on the load-carrying capacity of the structure is required. The objective of the static finite element analysis described in this paper is to determine the effect of various offset lengths on the overall bending stiffness of the crane and on the maximum stresses.

17. Key Words (Suggested by Author(s))	18. Distribution Statement
Space Station Space Crane Space Construction Truss Beam Erectable Truss	Unclassified - Unlimited Subject Category 39

19. Security Classif. (of this report)	20. Security Classif. (of this page)	21. No. of pages	22. Price
Unclassified	Unclassified	17	A02

NASA FORM 1626 OCT 86