presented at the
5TH INTERNATIONAL SYMPOSIUM ON FLOW VISUALIZATION
August 21-25, 1989
Prague, Czechoslovakia

# FRINGE FORMATION IN DUAL-HOLOGRAM INTERFEROMETRY

A. W. Burner

NASA Langley Research Center
Hampton, Virginia, USA 23665

A first order geometrical optics treatment of holograms combined with the generation of interference fringes by two point sources is used to describe reference fringe formation in non-diffuse dual-hologram interferometry.

fringe formation; holographic interferometry; flow visualization

## 1. INTRODUCTION

Non-diffuse dual-hologram interferometry is one of the more commonly used holographic flow visualization techniques for wind tunnels. The technique was used as early as 1966 /1/ with the first major applications of the technique to wind tunnels being made in the early 1970's /2/. With this technique flow and no-flow recordings are made as two separate holograms. Schlieren and shadowgraph are obtained from reconstructions of the flow hologram only, while interferometry is obtained by interfering reconstructions from both holograms. By adjusting the holograms relative to one another in the reconstruction setup various reference (or background) fringe spacings and orientations can be realized, either to emphasize different parts of the flow field or to create more fringe crossings in the region of evaluation.

The adjustments required to produce reference fringes in the dual-hologram interferometer can sometimes appear rather "mysterious" and a mixture of trial-and-error and experience is usually required. The purpose of this paper is to show that a simple first order model is useful as an aid in understanding some of the basic adjustments of the interferometer. First, the generation of fringes by two point sources and the first order imaging properties of planar holograms are reviewed. It is then shown how the first order imaging relationships can be used to describe reference fringe patterns for the typical geometry used in dual-hologram interferometry. Finally it is shown how the first order model can

be used to determine the reconstruction geometry necessary to obtain reference fringes, without adjusting the two holograms, when the reconstructing wavelength is less than the exposing wavelength.

## 2. FRINGES FORMED BY TWO POINT SOURCES

The experimental arrangement for holographic flow visualization typically consists of a plane wave reference beam and a converging spherical wave scene beam which intersect at the hologram plane at equal angles. The spherical wave is produced by two parabolic mirrors used off-axis in the conventional Z configuration with offset angles made equal to minimize coma. The converging spherical wave suffers from astigmatism but to first order focuses to a point. Such a scene beam is particularly amenable to a first order treatment since it is only necessary to determine the location of the two point source images reconstructed by each of the two holograms to predict reference fringe patterns.

Consider a two beam interferometer in which two virtual images of a point source are formed. The optical components of the interferometer can be adjusted such that the two point source images move with respect to one another to form various reference fringe patterns (fig. 1). It is the displacement of the fringes from their reference positions that is measured to determine optical path length changes. The interference fringes formed by two point sources form hyperboloids of revolution with the point sources as foci /3/. The interference pattern formed at a given plane is determined by its intersection with the fringe surfaces. For instance, if the two point sources are displaced perpendicularly to the viewing plane, circular fringes are seen. If the two point sources are displaced parallel to the viewing plane hyperbolic fringes are seen with the vertex perpendicular to the line connecting the two point sources. To first order the reference fringes for the two parallel displaced point sources are straight lines with spacing given by $\lambda Z/D$ where $\lambda$ is the wavelength of light, D is the distance between the two point sources, and Z is the distance from the plane containing the point sources to the viewing plane. In general, curved fringes result with the center of curvature of the fringes found at the intersection with the viewing plane of a line which passes through the two point sources.

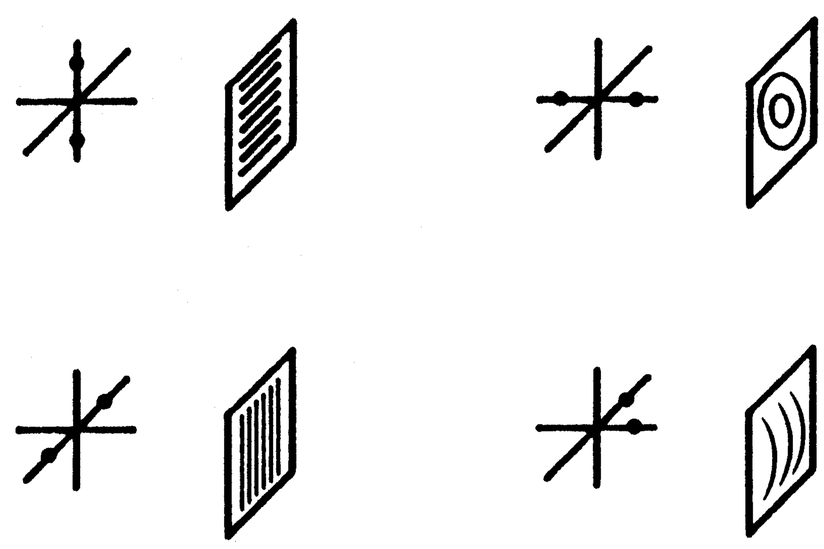

**Fig. 1 Interference fringes generated by 2 point sources**

## 3. FIRST ORDER PROPERTIES OF HOLOGRAMS \4\

The optical power $\Phi$ of a planar hologram at wavelength $\lambda$, when treated as a thin lens, is given by

$$\Phi = \mu \, \Phi_o \tag{1}$$

where $\Phi_o$ is the optical power of the hologram when reconstructed with the exposing wavelength $\lambda_o$, and $\mu = \lambda/\lambda_o$. The

power $\Phi$ is related to the focal length f of the hologram by $f = 1/\Phi$. The power $\Phi_o$ is found from the Gaussian object-image relationship to be

$$\Phi_o = 1/Z_s - 1/Z_R \tag{2}$$

where $(0,Y_R,Z_R)$ and $(0,Y_s,Z_s)$ are the coordinates of the exposing reference and scene beam point sources respectively. The hologram is centered at the origin and located in the XY plane (fig. 2). The YZ plane contains both point sources used to expose the hologram. Sweatt \4\ points out that there is no loss of generality in such a choice. A construction ray (a ray drawn in a first order analysis which does not necessarily pass through the optics) drawn from the exposing reference beam point source to the scene beam point source passes through the hologram plane at the thin lens equivalent to a nodal point located at $(0,Y_N,0)$ where

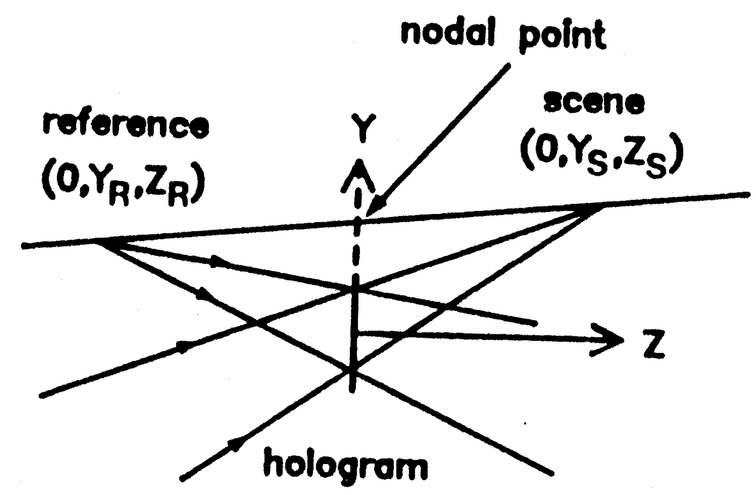


Fig. 2 1st order geometry

$$Y_N = (Z_R Y_s - Z_s Y_R)/(Z_R - Z_s) \tag{3}$$

The nodal point need not lie on the hologram itself and is independent of exposing or reconstruction wavelength. Just as for a thin lens, any first order construction ray which passes through the nodal point is not refracted. To find the point source image, a construction ray is drawn from the reconstruction reference point source through the nodal point to the Gaussian image plane. The image is located at the point where the ray intersects the image plane. This plane is perpendicular to the Z axis and given by $Z = Z_I$ where

$$Z_I = 1/(1/Z_C + \Phi) \tag{4}$$

and $Z = Z_C$ is the plane containing the reconstruction reference point source. If the X,Y coordinates of the reconstruction reference point source are $(X_C,Y_C)$ then the coordinates in the image plane of the reconstructed scene beam point source are given by

$$\begin{aligned} X_I &= X_C\, Z_I/Z_C \\ Y_I &= Y_N + (Y_C - Y_N)\, Z_I/Z_C \end{aligned} \tag{5}$$

If the exposing geometry and wavelength are duplicated for reconstruction so that $(X_C,Y_C,Z_C) = (X_R,Y_R,Z_R)$ and $\mu = 1$, then $(X_I,Y_I,Z_I) = (X_s,Y_s,Z_s)$ and the reconstructed scene beam point source image is located at the focus of the exposing scene beam. Once the exposing geometry is known the location of a point source image during reconstruction at other wavelengths and geometries can be determined with the above relations. If the exposing reference or scene beam is a plane wave then the appropriate use of direction tangents to describe the location of the sources is necessary in some of the above relations.

## 4. REFERENCE FRINGE FORMATION WITH TWO HOLOGRAMS

As mentioned earlier a typical holographic flow visualization setup will use a plane wave reference beam and a converging spherical wave scene beam which intersect the hologram plane at equal angles /5/. From the above relations, assuming a plane wave reference beam for exposure and reconstruction,

$$
\begin{aligned}
f &= 1/\Phi = Z_s/\mu \\
Y_N &= Y_s - v_R Z_s \\
Z_I &= f \\
X_I &= u_C f \\
Y_I &= Y_N + v_C f
\end{aligned}
\tag{6}
$$

where u and v are direction tangents (slopes) in the XZ and YZ planes of the exposure or reconstruction reference beam. The direction tangent is positive if the ray must be rotated clockwise to be parallel to the Z axis.

In dual-hologram interferometry an exposure without flow is made on one hologram which is then removed, and another exposure with flow made on a second hologram. The holograms are separated by d. In the following discussion it is assumed that during reconstruction the two holograms have the same relative positions as for the exposure. This arrangement is depicted in fig. 3 where the hologram substrate thickness has been neglected and the two holograms are assumed to be parallel. Note that the hologram substrate does not affect the power of a hologram (assuming a plane parallel plate), but does introduce a first order focus shift and a lateral displacement. The plane on which the fringes are observed is perpendicular to a ray from the center of the flow hologram. The plane Z = 0 is located at hologram #1 and the focal lengths of the two holograms are given by

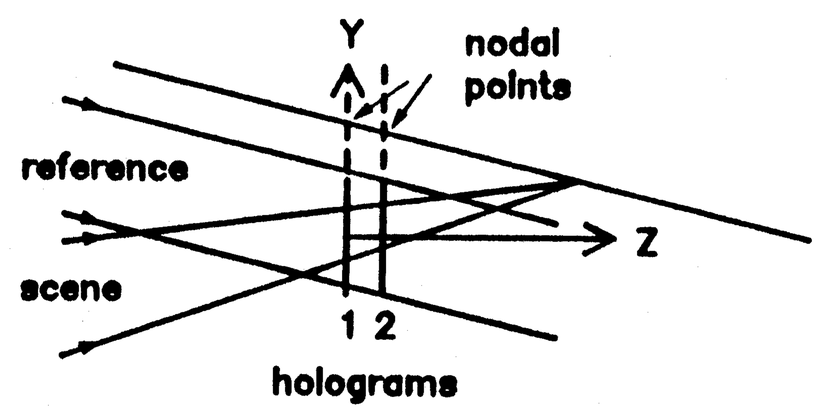


Fig. 3 Dual-holograms

$$
\begin{aligned}
f_1 &= Z_s/\mu \\
f_2 &= (Z_s - d)/\mu = f_1 - d/\mu
\end{aligned}
\tag{7}
$$

where $Z = Z_s$ is the plane of focus of the exposing scene beam. The Gaussian image planes of holograms #1 and #2 are located at $Z = f_1$ and $Z = f_2 + d$ respectively. For $\mu = 1$ the Gaussian image planes of the two holograms coincide.

A construction ray parallel to the reference beam and passing through the scene beam focus determines the nodal points of the two holograms. If reconstruction occurs at the same wavelength ($\mu = 1$) and geometry as used for exposure, then two point source images are formed which coincide in the common Gaussian image plane, giving an infinite fringe condition. Any phase differences between exposures are evident as

partial or whole fringe shifts. If one of the holograms is translated in the Y direction for instance, the point source image reconstructed from that hologram moves the same amount and direction in the Gaussian image plane. The reference fringes observed on the viewing plane are then curved with the center of curvature determined by the intersection of the viewing plane and the Gaussian image plane. To obtain straight line reference fringes an additional translation in the Z direction would be necessary to ensure that the two point sources are separated parallel to the viewing plane (which for the typical case is not perpendicular to the Z axis). Note that if the hologram substrate thickness is not negligible the two reconstructed point sources do not coincide (without adjusting one of the holograms) since the reconstructed scene beam from hologram #1 passes through two substrates while the scene beam from hologram #2 only passes through one. For a typical substrate thickness t = 1 mm, refractive index n = 1.52, and scene beam slope angle of +5°, the scene beam from hologram #1 suffers an additional focus shift $t(n-1)/n = +0.34$ mm in the Z direction and a lateral displacement $-v_r t(n-1)/n = -0.029$ mm in the Y direction.

Reconstructions are often made at a shorter wavelength ($\mu < 1$) when using a pulsed ruby laser for the exposure. This situation is depicted in fig. 4 in which the exposing geometry of the reference beam is maintained. Again a ray parallel to the reference beam is passed through the nodal points of the two holograms. The intersection of the construction ray with the Gaussian image planes (now separated) of the two holograms locates the reconstructed point source images. The Gaussian image plane of hologram #1 is separated in the Z direction from the image plane of hologram #2 by

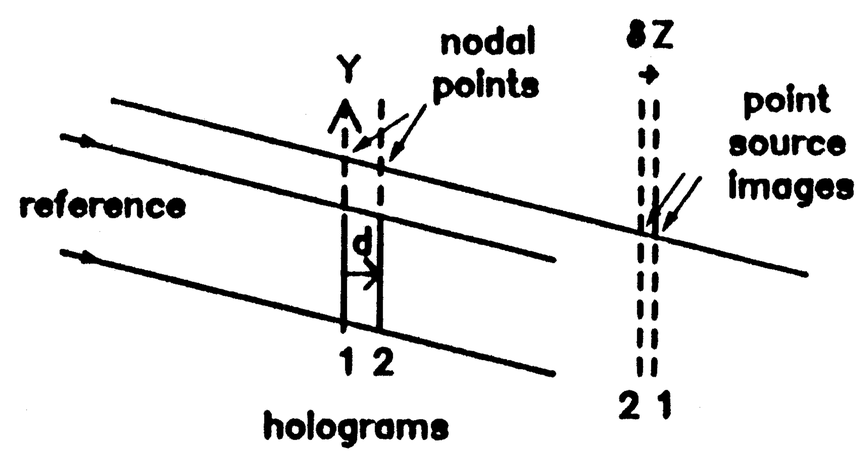


Fig. 4 Dual-holograms with $\mu<1$

$$\delta Z = f_1 - (f_2 + d) = d\,(1/\mu - 1) \qquad (8)$$

The two point source images are separated in the Y direction by

$$\delta Y = d\, v_c\, (1/\mu - 1) \qquad (9)$$

For typical values of d = 6.0 mm, $\mu = 0.91$, and a reference beam slope angle of -5°, $\delta Z$ will equal +0.59 mm and $\delta Y$ will equal -0.051 mm. $\delta Z$ and $\delta Y$ are in addition to the focus shift and lateral displacement (which are only slightly wavelength dependent) due to the substrate. The fringes on the viewing plane (assuming the holograms are positioned as for the exposure) are curved with the center of curvature determined by the intersection of a line through the two point sources and the viewing plane. To obtain the infinite fringe condition hologram #2 can be translated in the Z direction by $\delta Z$ and in the Y direction by $\delta Y$.

### 4.1 Reference fringe formation without moving holograms

The first order model can also be used to predict reference fringe formation for other than plane wave reference

beams during reconstruction. For instance, the two reconstructed point source images can be made to coincide without adjusting the two holograms from their positions for the exposure (even with $\mu \neq 1$) if the radius of curvature of the reference beam is allowed to vary for the reconstruction. The Gaussian image plane for each hologram can be found from eq. (4) when using a spherical wave reference beam for reconstruction. Taking into account the distance d between the two holograms and with Z = 0 located at hologram #1, a plane $Z = Z_C$ can be solved for as the plane of focus of a reconstruction reference beam which will cause the Gaussian image planes of the two holograms to coincide. If d = 6 mm, $Z_R$ = 25 cm, and $\mu = 0.91$, $Z_C$ is found to be +5.67 m which indicates a slightly converging spherical wave reference beam. (For the second solution to the resulting quadratic equation, the reference beam would be focused between the two holograms.) The two point sources in the common image plane will coincide to produce the infinite fringe case if the focus of the spherical wave reference beam lies on the line through both nodal points. The two point sources can be separated parallel to the viewing plane to form straight line reference fringes by changing the focus and angle of inclination of the reference beam.

The error in the above model in determining relative locations of the two point source images is much smaller than the error in determining their absolute locations since the absolute errors for each image are nearly equal. Errors in the above model can be lessened by replacing the Z coordinate in eqs. (2-5) with the radial distance from the origin, where the radial distance has the same sign as the Z coordinate /6/. This improved model (which lacks the computational simplicity of the above paraxial first order model) is sometimes called the nonparaxial first order model.

## 5. CONCLUSION

A first order geometrical optics treatment of holograms combined with the generation of interference fringes by two point sources is useful in describing reference fringe formation in dual-hologram interferometry and as an aid in understanding some of the basic adjustments of the interferometer.

## References


/1/ TANNER, L. H.: J. Sci. Instrum., Vol. 43, Feb. 1966, pp. 81-83

/2/ HAVENER, G. and RADLEY, J.: Quantitative Measurements Using Dual Hologram Interferometry. ARL 72-0085, June 1972

/3/ TOLANSKY, S.: An Introduction to Interferometry. John Wiley and Sons, New York, 2nd edn., 1973

/4/ SWEATT, W. C.: J. Opt. Soc. Am. Vol. 67, No. 6, June 1977 pp.803-808

/5/ BURNER, A. W. and GOAD, W. K.: Holographic Flow Visualization at NASA Langley. Instru. in the Aerospace Indust. Vol. 25, Instru. Soc. Am., 1979, pp.477-484

/6/ CHAMPAGNE, E. B.: J. Opt. Soc. Am. Vol. 57, No. 1, Jan. 1967, pp. 51-55