NASA Technical Paper 3587

Buckling and Postbuckling Behavior of Laminated Composite Plates With a Cutout

Michael P. Nemeth
Langley Research Center • Hampton, Virginia

National Aeronautics and Space Administration
Langley Research Center • Hampton, Virginia 23681-0001

July 1996

Available electronically at the following URL address: http://techreports.larc.nasa.gov/ltrs/ltrs.html

Printed copies available from the following:

NASA Center for AeroSpace Information
800 Elkridge Landing Road
Linthicum Heights, MD 21090-2934
(301) 621-0390

National Technical Information Service (NTIS)
5285 Port Royal Road
Springfield, VA 22161-2171
(703) 487-4650

Abstract

This paper addresses the effects of a cutout on the buckling and postbuckling behavior of rectangular plates made of advanced composite materials. An overview of past research is presented, and several key findings and behavioral characteristics are discussed. These findings include the effects of cutout size, shape, eccentricity, and orientation; plate aspect and slenderness ratios; loading and boundary conditions; and plate orthotropy and anisotropy. Some overall important findings of these studies are that plates that have a cutout can buckle at loads higher than the buckling loads for corresponding plates without a cutout and can exhibit substantial postbuckling load-carrying capability. In addition, laminate construction, coupled with cutout geometry, offers a viable means for tailoring structural response.

Introduction

Two research topics of great practical importance are the buckling behavior and the postbuckling behavior of thin plates that have a cutout and are made of advanced composite materials. For example, composite plate-like subcomponents that have a cutout are being considered for use in many types of aerospace structures because of their high stiffness-to-weight and strength-to-weight properties. These properties could ultimately yield substantial weight savings for aircraft structures.

The need for a cutout in a subcomponent is typically required by practical concerns. For example, cutouts in wing spars and cover panels of commercial transport wings and military fighter wings are needed to provide access for hydraulic lines and for damage inspection. In some applications, these structural elements are required primarily to resist buckling, and in other cases they must carry a load well into the postbuckling range in order to yield weight savings. Thus, understanding their buckling and postbuckling behavior is needed for their design.

Plate-like subcomponents come in many forms such as an annular plate or a rectangular plate that has a circular cutout. The present study focuses on rectangular plates that have a single unreinforced cutout. Developing a thorough understanding of the behavior of this subcomponent is a fundamental step toward understanding the behavior of complex structures with cutouts such as airplane wing ribs. Knowledge of the basic response of the subcomponent provides useful information for the preliminary design of complex structures. In addition, this basic knowledge provides valuable insight into modeling complex structures with general purpose finite element codes, a step that takes place at a later phase in the design process. Furthermore, knowledge of the subcomponent response is very useful for identifying erroneous results that may be obtained because of improper finite element modeling.

One objective of the present study is to describe the results of research that has been conducted on the buckling and postbuckling behavior of rectangular composite plates that have a cutout. Another objective is to describe several of the key behavioral characteristics and trends in a coherent manner. To achieve this goal, the present paper is structured as follows: Nomenclature is established for concisely describing plate geometry, loading conditions, and support conditions. An overview of past research is presented that identifies the analytical approach that is used and then describes what particular aspects of the behavior were investigated. For convenience, the primary studies conducted on buckling and postbuckling behavior are also summarized in tables 1 and 2, respectively. Next, several key findings on the buckling and postbuckling behavior of composite plates that have been identified since the early 1970's are described and discussed. Several subsections are included that address specific issues such as the effects of cutout shape and plate anisotropy. Last, some closing comments about future research are given.

Problem Description and Terminology

To describe concisely the wide range of results obtained since the early 1970's, it is necessary to establish some convenient parameters and terminology for describing plate geometry, loading and boundary conditions, and material composition.

Plate Geometry and Laminate Notation

A rectangular plate that has a centrally located elliptical cutout is shown in figure 1. The plate has length L and width W, and the plate aspect ratio is defined as L/W. Similarly, the plate has a nominally uniform thickness t, and the plate slenderness ratio is defined as W/t. The lengths of the major and minor axes of the elliptical cutout shown in figure 1 are defined herein as d and h, respectively. The elliptical cutout aspect ratio is defined

Table 1. Primary Studies Conducted on Buckling Behavior of Plates With a Cutout

Authors (a)	Plate shape		Cutout shape			Loading type			Laminate type		Boundary condition type		
	Square	Rectangular	Circular	Square	Other	Compression	Shear	Other	Orthotropic	Anisotropic	Simply supported	Clamped	Other
Martin[1]	x		x			x			x	x	x		
Knauss, et al[2]		x	x			x			x				x
Ter-Emmanuil'ian[4]	x			x		x			x				x
Herman[5]	x		x				x			x		x	
Nemeth, et al.[6,7,9,18]	x	x	x	x	x	x			x		x		x
Marshall, et al.[10,11,16,17]	x	x	x			x			x		x		
Vandenbrink, et al.[14,15]	x		x			x			x		x		
Marshall, et al.[19]	x	x	x			x			x		x		
Larsson[20]	x		x			x		x	x		x	x	
Turvey, et al.[21]	x		x			x			x	x	x	x	
Yasui and Tsukamura[22]	x	x	x	x		x			x		x		
Turvey, et al.[23]	x		x				x		x	x	x	x	
Nemeth[24,25,31]	x	x	x			x			x	x	x		x
Lee, et al.[26]	x		x			x		x	x		x	x	
Lin and Kuo[27]	x		x			x		x	x	x	x	x	
Hyer and Charette[28]	x		x			x				x	x		
Horn and Rouhi[29,30]	x		x			x				x			x
Owen and Klang[32,33]	x		x		x		x		x	x	x		
Rouse[34]	x		x				x			x		x	
Vellaichamy, et al.[35]	x				x		x	x		x	x		
Chang and Shiao[36]	x		x					x		x	x		
Yasui[38]	x	x	x			x		x	x		x		
Chen, et al.[39]	x		x					x		x	x		
Lee and Hyer[40,41,42]	x		x			x			x	x	x		x
Ram and Sinha[43]	x		x					x	x	x	x	x	
Srivatsa, et al.[44]	x		x			x			x	x	x	x	x
Jones and Klang[45,46]	x		x			x	x		x	x	x	x	x
Britt[47]	x	x	x		x	x	x	x		x	x	x	

[a] Superscripts are reference numbers.

Table 2. Primary Studies Conducted on Postbuckling Behavior of Plates With a Cutout

Authors (a)	Plate shape		Cutout shape			Loading type			Laminate type		Boundary condition type		
	Square	Rectangular	Circular	Square	Other	Compression	Shear	Other	Orthotropic	Anisotropic	Simply supported	Clamped	Other
Martin[1]	x		x			x			x	x	x		
Herman[5]	x		x				x			x		x	
Vandenbrink, et al.[14,15]	x		x			x			x		x		
Marshall, et al.[19]	x		x			x			x		x		
Larsson[20]	x		x			x		x	x		x		
Nemeth[31]	x		x			x			x				x
Horn and Rouhi[29,30]	x		x			x				x			x
Rouse[34]	x		x				x			x		x	
Lee and Hyer[41,42]	x		x			x				x			x

[a] Superscripts are reference numbers.

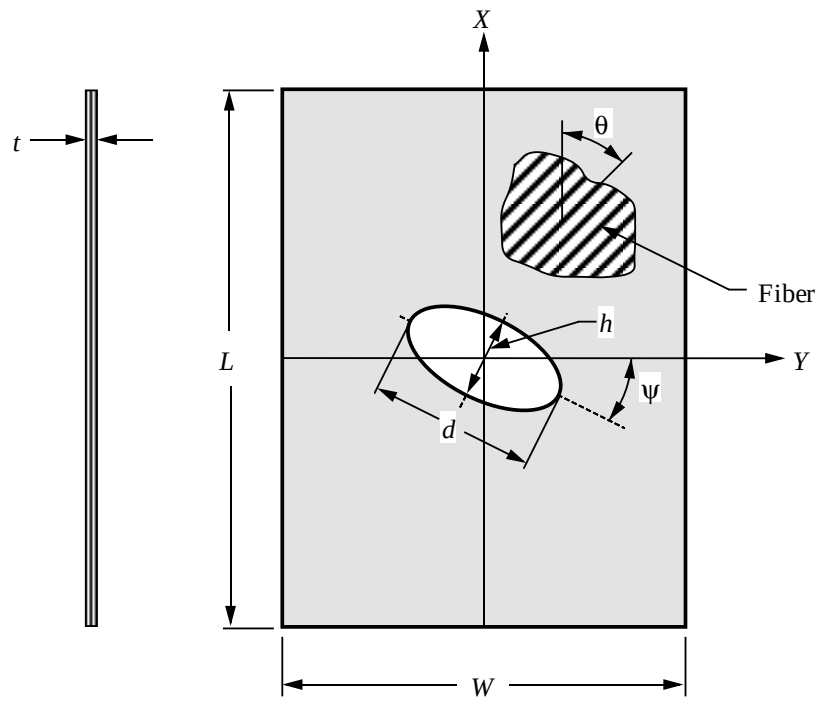

Figure 1. Geometry and dimensions of a plate with a centrally located elliptical cutout.

as h/d. In addition, the orientation of the principal axes of the cutout is defined by the angle ψ, as shown in figure 1. For the degenerate case of a circular cutout, the parameter used herein to define cutout size is the cutout diameter-to-plate-width ratio d/W.

Several studies that are discussed address plates made from specially orthotropic materials. For these plates, the ratio of their apparent major-to-minor principal elastic moduli is defined herein as E_x/E_y. For laminated composite plates, the fiber orientation angle of a ply is indicated by θ in figure 1. The ratio of the apparent major-to-minor principal elastic moduli for an individual ply is defined herein as E_1/E_2. A laminate with all its fibers oriented in the same arbitrary direction is referred to herein as a unidirectional off-axis laminate. When an angle designation is given for these laminates, it also corresponds to θ (fig. 1). Symmetrically laminated plates with negligible anisotropy are referred to as quasi-orthotropic plates.

Loading Conditions

The loading conditions discussed herein are primarily uniaxial compression and shear loads. Some results are also given for biaxial compression, biaxial tension-compression, and combined tension or compression and shear loads. For a plate with a cutout, there are different ways of applying these loads that generally correspond to different deformation states. These deformation states are associated with the application of displacement or stress boundary conditions to introduce the loads.

The compression loads are applied to a plate by either uniformly displacing or uniformly stressing two opposite exterior plate edges, as illustrated in figure 2. These loading cases are referred to herein as displacement-loading and stress-loading cases, respectively. Equivalently, a compression-loaded plate is referred to as displacement loaded or stress loaded. The shear loadings are applied to a plate in an analogous manner; i.e., a distinction is also made between displacement-loaded and stress-loaded plates. For a shear stress-loaded square plate, a uniform shear traction (such as pure shear) is applied to the exterior plate edges, as illustrated in figure 3. For a corresponding displacement-loaded square plate, a displacement field is imposed so that the exterior edges remain straight as the planform of the plate deforms into a parallelogram, as shown in figure 3.

The compression and shear displacement loadings are particularly important because they are representative of the load transmission that occurs between a plate-like subcomponent and an adjacent support structure that has a much higher relative in-plane stiffness. If a plate does not have a cutout, the distinction between displacement and stress loadings is unnecessary.

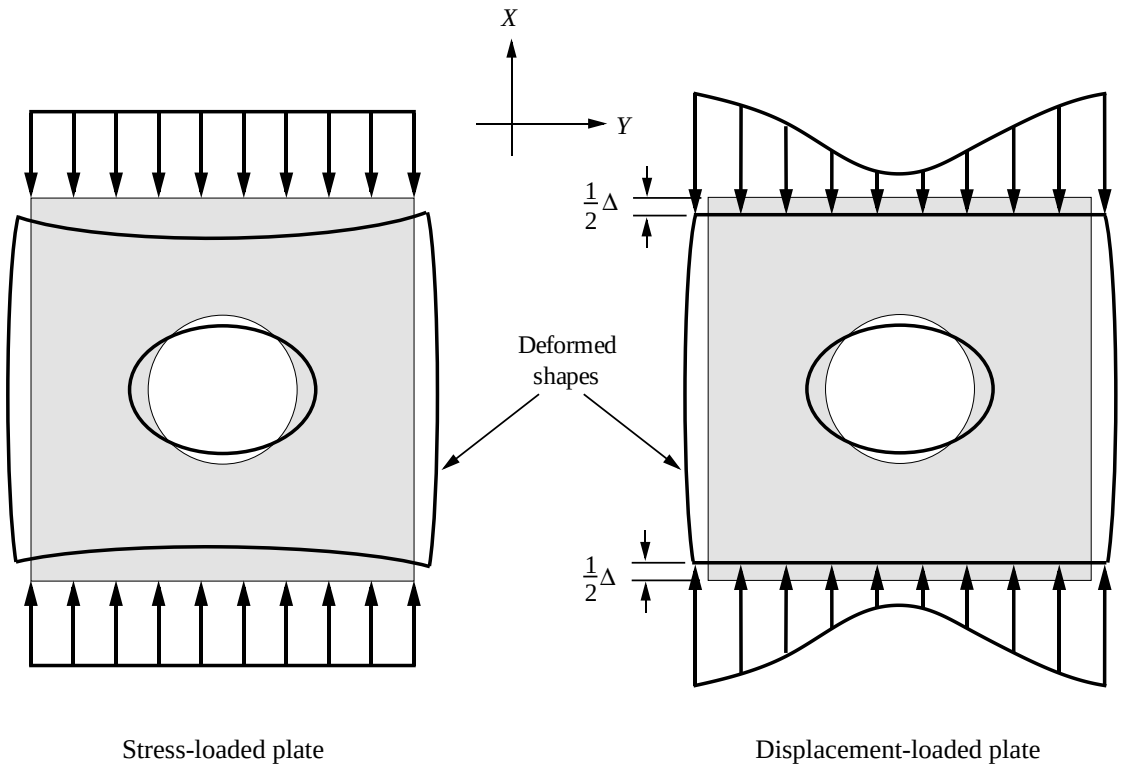

Figure 2. Loading modes and prebuckling deformation shapes for compression-loaded square plates with a large central circular cutout (Δ indicates the applied displacement magnitude).

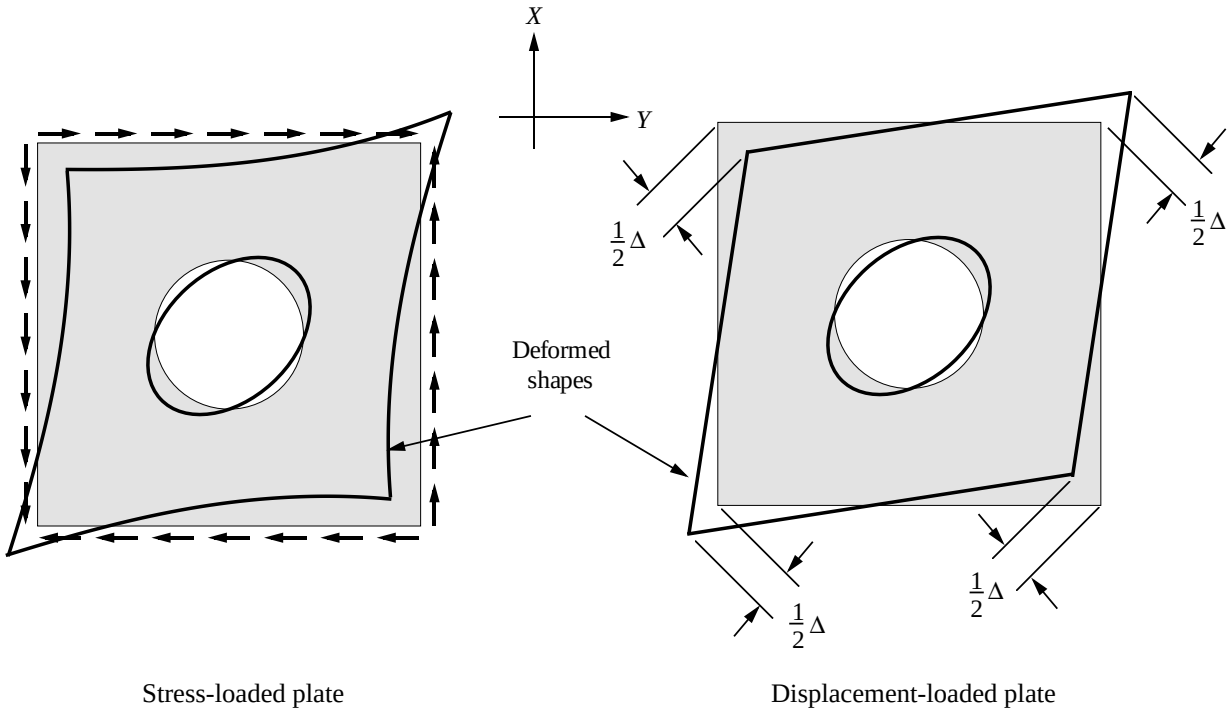

Figure 3. Loading modes and prebuckling deformation shapes for shear-loaded square plates with a large central circular cutout (Δ indicates the applied displacement magnitude).

Boundary Conditions

The boundary conditions discussed herein fall into two categories: in plane and bending. The in-plane boundary conditions on the loaded edges are known from the applied loading. On an unloaded edge, several possibilities for boundary conditions exist. In the present study, two cases are considered. In the first case, an unloaded edge is free to deform in plane and is referred to as a moveable edge. In the second case, movement of the unloaded edge is restrained in the direction normal to the edge but is free to expand or contract longitudinally. This boundary condition is referred to as an immovable edge. In all cases considered herein, the unloaded edges of a plate are considered to be moveable edges unless otherwise indicated.

The bending boundary conditions that naturally receive the most attention in the studies described are clamped and simply supported boundary conditions. For both of these boundary conditions, the out-of-plane displacement normal to the plate is zero valued. In addition, the out-of-plane rotation of a material line element normal to a clamped edge is zero valued. For a simply supported edge, the component of the bending moment vector that is tangent to the plate edge is zero valued such that the plate support is analogous to a frictionless hinge. Plates that are simply supported or clamped on all edges are referred to concisely as simply supported and clamped plates, respectively. In all cases considered herein, the cutout boundary is a free edge.

Overview of Past Work

Martin (ref. 1) published in 1972 what appears to be among the first studies of the buckling and postbuckling behavior of square uniaxial compression-loaded composite plates that have a cutout. An approximate postbuckling analysis was derived for stress-loaded anisotropic plates that have a central circular cutout and simply supported edges. The anisotropy included in the analysis accounts for coupling between pure bending and extension and between the twisting and shearing modes of a plate. The analysis is based on the Rayleigh-Ritz method in which the double integrals over the doubly connected region are integrated numerically. Experimental and analytical results were obtained for several square glass-epoxy symmetric and unsymmetric laminates with cutout sizes up to $d/W = 0.5$. Moreover, analytical results were obtained for several unsymmetric laminates made of boron-epoxy material. The analytical and experimental results appear to be in good agreement.

In 1978 Knauss, Starnes, and Henneke (ref. 2) presented an experimental investigation of the buckling behavior and failure characteristics of compression-loaded rectangular graphite-epoxy plates that had a central circular cutout. Displacement-loaded quasi-isotropic and quasi-orthotropic plates with either 24 or 48 plies and with cutout sizes up to $d/W = 0.3$ were investigated. The loaded edges of the plates were clamped into a test fixture, and the unloaded edges were supported by knife edges that were intended to simulate simply supported edges.

A survey of buckling studies, conducted for the most part in eastern Europe, was presented by Preobrazhenskii (ref. 3) in 1980. The earliest work pertaining to composite plates mentioned in this paper is work on specially orthotropic square plates with a central square cutout (published by Ter-Emmanuil'ian (ref. 4) in 1971). In this early paper, compression buckling of a stress-loaded plate was investigated. The plate that was investigated is simply supported on the loaded edges and free on the unloaded edges such that the plate buckles as a wide column. Analytical results were obtained by using the finite-difference method in which the effect of the cutout on the prebuckling stress distribution is neglected.

Herman (ref. 5) presented in 1982 what appears to be the first investigation of the buckling and postbuckling behavior of shear webs with a central circular cutout. This study investigated square displacement-loaded plates with $d/W = 0$ and 0.45 that were made from a graphite-epoxy cloth. Analytical results were obtained for six test specimens by using the finite element method.

In 1983 Nemeth and his colleagues (refs. 6 and 7) presented an approximate analysis for buckling of rectangular compression-loaded specially orthotropic, quasi-isotropic, and quasi-orthotropic plates with a centrally located cutout. The special purpose approximate analysis is based on the Kantorovich (ref. 8) variational method. Following this approach, kinematically admissible displacement series are used for the prebuckling in-plane displacements and the out-of-plane buckling displacement with a prescribed distribution across the plate width and an undetermined distribution along the plate length. The variational formulation of the prebuckling and buckling problems are converted into systems of ordinary differential equations that were solved by using the finite-difference method. The analysis is tailored to accommodate uniaxially stress-loaded and displacement-loaded plates that are simply supported on the unloaded edges and either clamped or simply supported on the loaded edges. The unloaded edges are modeled as moveable edges, and the cutout shape is restricted to be symmetrical across the plate width but is otherwise arbitrary. Additional documentation of the analysis and a corresponding computer program were presented in 1984 (ref. 9). Parametric studies were also presented in references 9 and 10 that predict the effects of cutout size, plate aspect ratio, compressive loading conditions,

bending boundary conditions, and plate orthotropy on the buckling behavior.

In 1984 and 1985 Marshall, Little, and El Tayeby (refs. 10 and 11) presented an analytical and experimental investigation of the buckling behavior of compression-loaded orthotropic rectangular plates with a central circular cutout. Approximate analytical results were obtained for displacement-loaded plates with simply supported edges by using the Rayleigh-Ritz method. In this analysis, the prebuckling stress field is approximated by the statically determinant Kirsch (ref. 12) solution for an infinite sheet with a circular cutout. In addition, the buckling mode is approximated by a single trigonometric term and a decaying exponential term and is similar to the mode shape used by Kumai (ref. 13) for isotropic plates. Experimental results were obtained for simply supported glass-epoxy square plates without a cutout and with seven cutout sizes up to $d/W = 0.7$. The analytical and experimental results appear to be in good agreement, especially for the cutout sizes with $d/W \leq 0.5$.

In 1985 VandenBrink and Kamat (refs. 14 and 15) presented buckling and postbuckling results for square compression-loaded symmetric angle-ply plates with a central circular cutout. Finite element results were obtained for stress-loaded and displacement-loaded graphite-epoxy plates with simply supported edges and cutout sizes up to $d/W = 0.6$.

In 1986 Marshall, Little, El Tayeby, and Williams (ref. 16) presented results for buckling of specially orthotropic rectangular plates with a longitudinally eccentric circular cutout. A 3-parameter Rayleigh-Ritz solution was obtained for compressive displacement-loaded plates with simply supported edges by following the same analytical approach presented in references 10 and 11. Experimental results were obtained for square glass-epoxy plates with $d/W = 0.3$ and 0.5, with cutout eccentricity values up to nearly 10 percent of the plate width. The analytical and experimental results appear to be in good qualitative agreement.

Numerous experimental results for buckling of simply supported rectangular composite plates with a central circular cutout were also presented by Marshall, Little, and El Tayeby (ref. 17) in 1986. Analytical results based on the analysis that is briefly described in references 10 and 11 are in good qualitative agreement with the experimental results. The analytical and experimental results also show the effects of cutout size, orthotropy, and plate aspect ratio on the buckling behavior of simply supported plates.

Nemeth, Stein, and Johnson (ref. 18) summarized the approximate analysis presented in references 6, 7, and 9 and gave additional analytical results for square specially orthotropic graphite-epoxy plates that have a central circular cutout. Results obtained from the approximate analysis, the finite element analyses, and the corresponding experimental results were presented for cutout diameters up to $d/W = 0.7$. The approximate analysis was shown generally to yield good approximations to the prebuckling stress distributions obtained from finite element analyses and generally to be in good agreement with the buckling loads obtained from corresponding finite element analyses and from experiments.

An interesting study was presented by Marshall, Little, and El Tayeby (ref. 19) in 1987 of the membrane stress distributions in simply supported rectangular glass-epoxy plates that are loaded in compression. Analytical and experimental results for displacement-loaded square plates were presented that show the effects of circular cutout size, plate orthotropy, and load level on the prebuckling and postbuckling stress distributions. The analytical results were shown to predict accurately the observed experimental trends.

In 1987 Larsson (ref. 20) presented results for buckling and postbuckling behavior of square specially orthotropic plates that are loaded in compression and have a central circular cutout. More specifically, finite element results were obtained for uniaxial and biaxial stress-loaded plates with cutout sizes up to $d/W = 0.6$. Results were presented that predict the effects of biaxial loading ratio, orthotropy, and cutout size on the buckling load and postbuckling stiffness. Selected results were also presented that illustrate the difference in buckling behavior for stress-loaded and displacement-loaded clamped and simply supported plates with a high degree of orthotropy.

In 1987 Turvey and Sadeghipour (ref. 21) also presented buckling results, which were obtained by using a special purpose finite element program tailored for parametric studies, for uniaxial compression-loaded plates with a central circular cutout. In particular, square stress-loaded unidirectional off-axis laminates made of graphite-epoxy or glass-epoxy material were investigated. Results were presented that predict the effects of the laminate orientation, cutout size, and bending boundary conditions (simply supported versus clamped) on the buckling load.

Yasui and Tsukamura (ref. 22) published analytical studies in 1988 of the compression buckling behavior of symmetric cross-ply rectangular plates that are simply supported and have either a central circular cutout or a central square cutout. Stress-loaded plates made of either graphite-epoxy or glass-epoxy material were investigated, and finite element results were obtained in which an automatic mesh refinement capability was used. Mesh refinements were carried out in both the prebuckling and

buckling phases of a solution. Results that predict the effects of cutout size, shape, and plate aspect ratio on the buckling load for the two types of orthotropic materials were presented by Yasui and Tsukamura.

Also in 1988 Turvey and Sadeghipour (ref. 23) presented a study of shear buckling of square graphite-epoxy and glass-epoxy plates with a central circular cutout. In this study, simply supported and clamped unidirectional off-axis laminates were investigated. Finite element results were obtained that predict the effects of cutout size, anisotropy, and bending boundary conditions on shear buckling of stress-loaded plates. Results were also obtained for clamped $[(\pm 45)_4]_S$ graphite-epoxy square plates with cutout sizes up to $d/W = 0.6$. These results illustrate the effect of the shear-loading mode on the buckling behavior; i.e., results are compared for shear-stress-loaded plates, for shear-displacement-loaded plates, and for shear-stress-loaded plates with the additional constraint that one pair of opposite edges remain straight during deformation.

Nemeth (refs. 24 and 25) presented a study in 1988 of the buckling behavior of rectangular symmetric angle-ply plates with a central circular cutout. Both compression stress-loaded and displacement-loaded graphite-epoxy plates were investigated. Analytical results obtained from the approximate analysis described in reference 9 and experimental results were presented for several displacement-loaded plates with cutout sizes up to $d/W = 0.66$. The loaded and unloaded edges of these plates were clamped and simply supported, respectively. The analytical results are generally in good qualitative agreement with the experimental results and accurately predict the response trends. Finite element results were also presented that predict the effects of cutout size on the importance of the bending anisotropy of the plates. In addition, results of a parametric study that was performed by using the approximate analysis were also presented. These results predict the effects of bending boundary conditions (loaded edges that are clamped or simply supported and unloaded edges that are simply supported), cutout size, compression-loading type, plate orthotropy, and plate aspect ratio on the buckling behavior.

Lee, Lin, and Lin (ref. 26) presented a study in 1989 of the buckling behavior of compression-loaded square plates with a central circular cutout. Finite element results were obtained for uniaxial and biaxial stress-loaded plates with either clamped or simply supported edges. Specially orthotropic plates with $E_x/E_y = 0.1$, 0.5, 2, and 10 were investigated. Results were presented that indicate the effects of cutout size, bending boundary conditions, compressive loading conditions, and the degree of orthotropy on the buckling behavior.

A buckling-behavior study of square laminated composite plates, each with a central circular cutout, was presented by Lin and Kuo (ref. 27) in 1989. Finite element results were obtained for clamped and simply supported stress-loaded plates loaded by either uniaxial compression, biaxial compression, or tension-compression biaxial loading. Results were presented that predict the effects of cutout size, lamina modulus ratio E_1/E_2, loading conditions, bending boundary conditions, plate slenderness ratio, and laminate stacking sequence on the buckling load. In particular, antisymmetric cross-ply and angle-ply plates and symmetric angle-ply plates were investigated.

Hyer and Charette (ref. 28) studied the use of curvilinear fiber geometry in laminate construction of graphite-epoxy composite plates that have a central circular cutout. Uniaxial tensile and compressive stress-loaded plates with $L/W = 1$ and 2 were examined. Buckling results were obtained from finite element analyses of square simply supported plates for several conventional straight-fiber format and curvilinear-fiber format stacking sequences. All stacking sequences that were considered correspond to slightly anisotropic laminates.

In 1990 Horn and Rouhi (refs. 29 and 30) presented experimental investigations of the buckling and postbuckling behavior of compression-loaded laminates with a central circular cutout. Sixty 16-ply thermoset and thermoplastic square displacement-loaded laminates were tested for two slightly anisotropic stacking sequences and for cutout sizes up to $d/W = 0.7$. The test specimens were clamped on the loaded edges and simply supported on the unloaded edges.

Nemeth (ref. 31) also presented an experimental investigation in 1990 of the buckling and postbuckling behavior of square compression-loaded graphite-epoxy plates with a central circular cutout. Results were presented for pathological specially orthotropic laminates with extreme degrees of orthotropy and for symmetric angle-ply plates. Buckling loads, prebuckling stiffnesses, and initial postbuckling stiffnesses were obtained for displacement-loaded plates with cutout sizes up to $d/W = 0.66$. The test specimens were clamped on the loaded edges and simply supported on the unloaded edges. Actual load versus end-shortening and load versus out-of-plane deflection curves that were obtained for each specimen were presented that graphically illustrate the effects of cutouts on the prebuckling and postbuckling load-carrying capacity of the plates. Furthermore, buckling mode shapes obtained from shadow moiré interferometry were presented that illustrate visually the effects of cutout size and laminate stacking sequence on the distribution of gradients in the out-of-plane displacement field.

Also in 1990 Owen and Klang (refs. 32 and 33) published a special purpose analysis for shear buckling of symmetrically laminated rectangular plates, each with a centrally located elliptical cutout. The prebuckling stress analysis is based on the complex variable formulation of plane elasticity with boundary collocation and accounts for anisotropy in the form of shear-extensional coupling. The buckling analysis is performed by using the Rayleigh-Ritz method in which the double integrals over the doubly connected region are integrated numerically. In addition, the buckling analysis accounts for anisotropy in the form of bending-twisting coupling. Buckling results were obtained for several stress-loaded square plates with simply supported edges. These results are for specially orthotropic plates with extreme degrees of orthotropy and with circular cutout sizes up to $d/W = 0.5$. In addition, results were obtained for several corresponding symmetrically laminated plates with relatively low degrees of bending anisotropy. The analytical results were compared with results from corresponding finite element analyses and are in good agreement.

In 1990 Rouse (ref. 34) presented an experimental investigation of the buckling and postbuckling behavior of square graphite-epoxy and graphite-thermoplastic plates loaded in shear. Thirty-eight specimens consisting of seven different slightly anisotropic laminate stacking sequences were investigated. Many of the specimens had a circular cutout, and cutout sizes up to $d/W = 0.5$ were investigated.

Vellaichamy, Prakash, and Brun (ref. 35) investigated optimizing laminate stacking sequence and elliptical cutout shape to improve prebuckling strength without degrading the buckling resistance of a plate. Simply supported square plates loaded by various combinations of biaxial tension and uniform edge shear stress were considered. Laminate constructions were limited to graphite-epoxy plies oriented at 0°, 45°, or 90° with respect to the edges of the plates; these laminates are slightly anisotropic.

Also in 1990, Chang and Shiao (ref. 36) presented results of a study of the thermal buckling behavior of square simply supported antisymmetric angle-ply plates, each with a central circular cutout. In this case, the loading is induced into a plate by constrained in-plane thermal expansion caused by a uniform temperature rise. The results presented in this study were obtained by using a higher order plate theory that includes the effects of transverse shear and through-the-thickness deformation. Finite element results were obtained that predict the effects of fiber orientation, laminate stacking sequence, number of plies, cutout size, and plate slenderness ratio on the critical temperature.

Sadeghipour (ref. 37) presented some additional details about the special purpose computer program previously described in references 21 and 23 for buckling analysis of plates with a cutout. Some of the results presented previously in reference 23 were also discussed.

In 1991 Yasui (ref. 38) presented what appears to be the first in-depth parametric study of buckling behavior of laminated composite plates with a central circular cutout that has been obtained by using the finite element method. Results were presented in this study for rectangular specially orthotropic plates and for symmetric cross-ply and angle-ply laminates loaded in compression. The symmetric angle-ply laminates that were investigated were assumed to have negligible bending anisotropy. Laminates made from either graphite-epoxy or glass-epoxy materials were investigated, and both uniaxial and biaxial stress-loaded plates were considered. Numerous results were obtained that show the effects of cutout size, plate aspect ratio, plate orthotropy, and loading conditions on the behavior of simply supported plates.

A study of the thermal buckling behavior of square antisymmetric cross-ply laminates with a central circular cutout was presented by Chen, Lin, and Chen (ref. 39) in 1991. Results for simply supported plates loaded by a temperature distribution that is uniform through the plate thickness and either uniformly distributed over the plate surface or linearly varying across the plate width and uniform along the plate length were obtained. The finite element results include transverse shear deformation and predict some of the effects of cutout size, plate slenderness ratio, lamina modulus ratio E_1/E_2, and lamina thermal expansion coefficient ratio α_1/α_2 on the buckling behavior.

Hyer and Lee (ref. 40) also presented a study in 1991 on using curvilinear fiber orientation to improve buckling resistance of square compression-loaded plates with a central circular cutout. Displacement-loaded graphite-epoxy plates with $d/W = 0.33$ and simply supported on all edges were investigated. The basic approach of this work for obtaining practical laminate designs is to discretize the plate into groups of finite elements that are amenable to manufacturing techniques for curvilinear fiber placement. The fiber orientation within each group of elements is input as a design variable in a gradient search algorithm, and the buckling load is maximized. Results are presented that suggest significant improvements in buckling resistance may be possible by using curvilinear fiber geometry in laminate construction.

In 1992 Lee and Hyer (refs. 41 and 42) presented experimental and analytical studies of the postbuckling behavior of conventional laminated plates with a central circular cutout that are loaded in uniaxial compression.

This work focuses on the behavior of square graphite-epoxy plates with $d/W = 0.3$ and examines the behavior of four different 16-ply laminate stacking sequences composed of 0°, 90°, and ±45° plies. The plates were displacement loaded with the loaded edges clamped and the unloaded edges simply supported. Finite element analyses were conducted, and failure predictions were given based on the maximum-stress failure criterion and included the effects of interlaminar shear stresses. Analytical predictions of laminate failure were specified to occur whenever a fiber failure or intralaminar shear failure occurred during loading. This approach was shown to be in good agreement with the experimental data in some cases.

In 1992 Ram and Sinha (ref. 43) presented a brief note on the buckling behavior of square graphite-epoxy plates with a central circular cutout that are subjected to hygrothermal loads. Results of finite element analyses, including transverse shear deformation, were presented for $[(0/90)]_S$ and $[(\pm 45)_2]_T$ graphite-epoxy plates. The results predict some of the effects of moisture concentration, cutout size, plate slenderness ratio, and bending boundary conditions (simply supported or clamped) on the buckling response.

Srivatsa and Krishna Murty (ref. 44) presented a parametric study in 1992 of the compression buckling behavior of stress-loaded composite plates with a central circular cutout. Results were obtained from finite element analyses based on classical laminated plate theory for square graphite-epoxy plates. Moreover, results were presented for quasi-isotropic and symmetric angle-ply plates that show the effects of cutout size, fiber orientation angle, and bending boundary conditions on the buckling behavior. The bending boundary conditions that were studied include all edges clamped, all edges simply supported, and the two permutations in which two opposite edges are clamped and the other two edges are simply supported.

Also in 1992 Jones and Klang (refs. 45 and 46) presented an extension of the analysis given in references 32 and 33. Their extended analysis incorporates a strategy for exploiting problem symmetry to reduce the computational effort needed to integrate numerically the potential energy density. Moreover, the analysis was extended to include elastic rotational restraints on the outer edges of a plate in which opposite edges of a plate are equally restrained. Results were obtained for several symmetric laminates of practical importance and for 30° unidirectional off-axis laminates that are highly anisotropic. Many results were obtained that predict the effects of central circular cutout size and rotational edge restraint on the buckling loads of compressive stress-loaded plates, compressive displacement-loaded plates, and shear stress-loaded plates.

Britt (ref. 47) presented results in 1993 of a parametric study of the buckling behavior of clamped and simply supported rectangular plates with a central circular or elliptical cutout. The results were obtained by using the analysis presented in references 32 and 33. Results were obtained that predict the effects of circular cutout size and plate aspect ratio on the buckling loads of several symmetric angle-ply plates and one type of quasi-isotropic plate. Each laminate considered exhibits a slight degree of anisotropy. Moreover, these results correspond to uniaxially compression-loaded plates and shear-loaded plates in which the loadings are applied as uniform edge stresses. Buckling interaction curves were also obtained for combinations of these two loading conditions that are applied to square plates with a circular cutout. Results also were obtained that predict the effects of elliptical cutout aspect ratio and orientation (the principal axes of the ellipse are rotated relative to the plate axes) on the buckling load of square plates loaded in compression, shear, or combined compression and shear.

Buckling Behavior Results

The studies previously described herein contain numerous results. Many key findings of these studies are presented in this section. First, some of the known general behavioral characteristics of square compression-loaded isotropic plates are discussed. Similarly, some discussion of the general behavior of square shear-loaded plates is also given. These brief discussions are intended to provide insight into composite plate behavior that will be discussed subsequently. Next, some key findings for compression-loaded and shear-loaded composite plates are described. Also presented are sections that focus on the effects of plate aspect ratio; cutout shape, eccentricity, and orientation; combined loading conditions; bending boundary conditions; plate anisotropy; thickness effects; and unconventional laminate construction.

Behavioral Characteristics of Square Plates

A basic characteristic of compression-loaded square isotropic plates with a large cutout that is somewhat counterintuitive at first glance is that, under certain circumstances, they exhibit higher buckling loads than corresponding plates without a cutout. This behavior has been studied for many years and has been experimentally verified for isotropic plates (e.g., see refs. 48–51). As a result of this unusual behavior, two fundamental effects of cutouts have been identified that significantly influence the buckling behavior of compression-loaded plates.

The first effect deals with the plate bending stiffness. Inherently associated with a centrally located cutout is a loss in bending stiffness in the central region of a plate that grows in importance as the cutout size increases. When a substantial portion of the axial prebuckling load path is centrally located, the bending stiffness in the central region of the plate is of paramount importance to buckling resistance. Intuitively, the increase in loss of bending stiffness caused by increase in cutout size yields a reduction in buckling resistance.

The second effect deals with the prebuckling load path. When a large cutout is present in a stress-loaded isotropic plate, the axial load path is, for the most part, centrally located (refs. 48–51). These plates exhibit a reduction in buckling load with an increase in cutout size. However, in a corresponding displacement-loaded plate, the axial load path is, for the most part, not centrally located. A prebuckling load path of this form basically reduces, and in some cases eliminates, the importance of the loss in central bending stiffness caused by cutout size. In this case, the redirection of the axial load path away from the central region of the plate increases the buckling load.

The basic behavior of shear-loaded square plates is fundamentally different from the behavior of compression-loaded plates. This difference is more readily understood by replacing the shear load acting on a plate with the statically equivalent pairs of diagonal tension and compression forces. By using this idea, it is seen that a substantial portion of the destabilizing compressive force acting in a shear-loaded plate is centrally located. In this situation, the buckling behavior is strongly dependent on the loss of bending stiffness in the central portion of a plate because of the presence of a cutout. Results for isotropic square plates suggest that the shear buckling load is dominated by the loss in bending stiffness; i.e., the shear buckling load decreases monotonically with increasing cutout size (refs. 52 and 53).

For plates made of composite materials, several additional factors affect the behavior of compression-loaded and shear-loaded plates that have a cutout. In general, the bending orthotropy and anisotropy affect how a cutout alters the central bending stiffness. This effect may be compounded because the bending orthotropy and anisotropy also affect how the bending boundary conditions influence the distribution of bending gradients in the central region of the plate. In addition, the membrane orthotropy and anisotropy affect how a cutout alters the prebuckling load path. This effect also may be compounded by how the membrane orthotropy and anisotropy influence the participation of the in-plane boundary conditions, including the loading conditions, in the buckling response.

Behavior of Compression-Loaded Square Plates

The compression-loaded square plate with a central circular cutout has been the focus of most of the research conducted on composite plates with a cutout. Martin (ref. 1) investigated the buckling behavior of square stress-loaded plates that have a central circular cutout and simply supported edges. The basic effects of cutout size were examined for $[0/\pm45/90]_S$, unidirectional 0°, and $[(\pm45)]_T$ glass-epoxy plates. Analytical and experimental results for these plates show that the buckling load generally decreases monotonically with increasing cutout size. For a plate with cutout sizes up to $d/W = 0.5$, the largest reduction in buckling load is less than 20 percent of the buckling load of the corresponding plate without a cutout. Corresponding analytical results for $[(\pm45)]_T$ boron-epoxy plates predict slightly larger reductions in buckling load with increasing d/W than for the glass-epoxy plates.

Nemeth and his colleagues (refs. 6, 7, 18, 24, and 25) investigated the buckling behavior of stress-loaded and displacement-loaded graphite-epoxy plates with a central circular cutout. In this study, plates with either clamped or simply supported loaded edges and simply supported unloaded edges were considered. The basic effects of cutout size and plate orthotropy were investigated by comparing the behavior of several specially orthotropic laminates and several symmetric angle-ply laminates. The specially orthotropic laminates that were investigated included the pathological cases of unidirectional 0° and 90° laminates and moderately orthotropic $[(0/90)_5]_S$ laminates. The symmetric angle-ply plates investigated were $[(\pm\theta)_m]_S$ laminates with values of $\theta = 30°$, 45°, and 60° and $m \geq 6$. Compression-loaded angle-ply plates with $m \geq 6$ that have a cutout were found to have negligible bending anisotropy.

Analytical results obtained by Nemeth and his colleagues for these laminates predict the following trends. First, orthotropy significantly affects the influence of the type of compression loading. Stress-loaded plates are predicted to be generally less buckling resistant than the corresponding displacement-loaded plates with increasing cutout size. This effect appears to be amplified as the in-plane stiffness of a plate in the loading direction increases because of a change in stacking sequence. Second, stress-loaded plates are generally predicted to exhibit a trend of monotonic reduction in buckling load with increasing cutout size. Displacement-loaded plates are predicted, for several laminates, to exhibit a trend similar to the trend experimentally verified by Ritchie and Rhodes (ref. 50) for displacement-loaded isotropic plates with simply supported edges; i.e., a slight reduction in buckling load with increasing d/W followed by monotonic increases in buckling load. This behavior was

also experimentally obtained (refs. 18, 24, and 25) for $[(90)_{20}]_T$, $[(0/90)_5]_S$, $[(\pm30)_6]_S$, and $[(\pm60)_6]_S$ laminates. For each of these laminates, plates with large cutout sizes buckled at loads either near or greater than the buckling load of the corresponding plate without a cutout.

This counterintuitive behavior also was predicted analytically and was found experimentally by Marshall and his colleagues (refs. 10, 11, and 17) for displacement-loaded specially orthotropic plates made of glass-epoxy and with simply supported edges. Analytical and experimental results obtained by Marshall and his colleagues show that simply supported plates with $d/W = 0.5$ can buckle at loads as much as approximately 30 percent higher than the buckling load of the corresponding plate without a cutout. Moreover, the relative increase in buckling load capacity is substantially larger for the glass-epoxy plates than for that obtained experimentally by Marshall and his colleagues for the corresponding isotropic plates. Furthermore, Horn and Rouhi (refs. 29 and 30) conducted experiments on square graphite-epoxy and graphite-thermoplastic laminates with circular cutout sizes up to $d/W = 0.7$. In this study, the test specimens were displacement-loaded and clamped on the loaded edges and simply supported on the unloaded edges. The experimental results show that the plates with a large cutout buckled at loads near or greater than the buckling load of a corresponding plate without a cutout.

The counterintuitive behavior of displacement-loaded plates with a large cutout described previously has been generally attributed to the redirection of the axial load path prior to buckling toward the unloaded edges of a plate. Nemeth (refs. 24 and 25) identified another basic effect that influences the prebuckling load path in square symmetrically laminated composite plates with a central circular cutout. This finding was uncovered by analytical results obtained for displacement-loaded and stress-loaded $[(\pm60)_6]_S$ graphite-epoxy plates with clamped or simply supported loaded edges and simply supported unloaded edges. These results predict that the stress-loaded plates exhibit nearly the same behavioral trend as the corresponding displacement-loaded plates; i.e., a slight reduction in buckling load with increasing cutout size followed by monotonic increases beyond or near the buckling load of the corresponding plate without a cutout. Examination of the prebuckling stress distributions for these plates revealed the presence of zones of transverse in-plane tensile stresses near the cutout. These tensile stresses were found to counteract the loss in central bending stiffness caused by the cutout. Similar observations were later made by Yasui (ref. 38) for rectangular composite plates.

Nemeth and his colleagues (refs. 6 and 7) also found that the influence of the bending boundary conditions at the loaded edges of a plate (on the effect of a cutout) is predicted to increase substantially as the ratio of the bending stiffnesses normal and parallel to the loaded edges D_{11}/D_{22} increases with a change in stacking sequence. This trend was also observed for the experimental results presented in references 18, 24, and 25. Similar trends were obtained using finite element analyses by Srivatsa and Krishna Murty (ref. 44) for stress-loaded plates with all edges clamped or with the loaded edges clamped and the unloaded edges simply supported. This influence of the bending boundary conditions on the effect of a cutout on the buckling load can be rationalized by noting that the distribution of bending gradients in the central region of a plate is significantly affected by the ratio D_{11}/D_{22}. Photographs of buckle patterns obtained by the use of a shadow moiré technique for displacement-loaded plates with clamped and simply supported loaded and unloaded edges, respectively, were presented in reference 31. These photographs show that for unidirectional 0° laminates, large axial bending gradients are generally distributed across more of the plate width than in the other laminates considered, which all had lower values of D_{11}/D_{22}. These displacement-loaded unidirectional 0° laminates also exhibited a monotonic reduction in buckling load with increasing cutout size. These two facts suggest that as the bending stiffness ratio D_{11}/D_{22} increases, the importance of the loss in central bending stiffness caused by a cutout can become greatly amplified. Typically, the loss in central bending stiffness results in a reduction in buckling load.

Analytical results were also presented by Nemeth and his colleagues for $[(+45/0/-45/90)_m]_S$ quasi-isotropic laminates made of graphite-epoxy material that were simply supported on all edges and displacement loaded. These results predict that as m increases, the buckling behavior of the quasi-isotropic plates approaches that of the corresponding isotropic plates.

Marshall, Little, and El Tayeby (refs. 10, 11, and 17) investigated the effects of circular cutout size and plate orthotropy on the buckling load by varying the modulus ratio E_x/E_y for specially orthotropic plates. Analytical results were obtained for square displacement-loaded plates with simply supported edges. These results predict relative increases in buckling load compared to the buckling load for the corresponding plates without a cutout, as d/W approaches 0.6 and for all the values of E_x/E_y that were considered. Moreover, the analytical results predict that the relative increase in buckling load with cutout size is very sensitive to the modulus ratio. The largest overall gains in relative buckling load were predicted for plates with the smaller modulus ratios.

Larsson (ref. 20) investigated the sensitivity of the buckling load of stress-loaded plates with a central circular cutout to the modulus ratio E_x/E_y. He obtained finite element results for simply supported square plates made of E-glass-epoxy material and two different types of boron-epoxy materials. The results predict a monotonic reduction in buckling load with increasing cutout size in each case. In addition, the results predict basically the same trend as that predicted by Marshall and his colleagues (refs. 10, 11, and 17) for displacement-loaded plates; i.e., smaller losses in buckling load, compared to the buckling load of the corresponding plate without a cutout, with increasing d/W are predicted for the plates with the smaller modulus ratios.

Lee, Lin, and Lin (ref. 26) also obtained finite element results for stress-loaded square specially orthotropic plates with a central circular cutout. Results for clamped and simply supported plates with E_x/E_y ratios of 0.1, 0.5, 2, and 10 were obtained for cutout sizes up to $d/W = 0.4$. These results predict the same trends predicted by Larsson. In addition, these results also predict that instead of monotonic reductions the stress-loaded clamped and simply supported plates with $E_x/E_y = 0.1$ exhibit increases in buckling load with increasing cutout size.

Similarly, Yasui and Tsukamura (ref. 22) obtained finite element results that predict the influence of the lamina modulus ratio E_1/E_2 on the buckling load for simply supported stress-loaded square plates. In this case, isotropic plates and symmetric cross-ply laminates made of glass-epoxy or graphite-epoxy materials were investigated. These results also predict a monotonic reduction in buckling load with increasing cutout size in each case. Furthermore, the results predict smaller losses in buckling load compared to the buckling load of the corresponding plate without a cutout, with increasing d/W for the plates with the smaller modulus ratios. Chen, Lin, and Chen (ref. 39) also investigated the effects of lamina modulus ratio on the thermal buckling behavior of [(0/90/0/90)] antisymmetric cross-ply laminates with a central circular cutout. Square plates with d/W as large as 0.6 were investigated. The finite element results they obtained predict that the buckling temperature becomes less sensitive to d/W as the lamina modulus ratio E_1/E_2 decreases. This same trend is also predicted for the lamina thermal expansion coefficient ratio α_1/α_2.

Srivatsa and Krishna Murty (ref. 44) studied the basic effects of circular cutout size and plate orthotropy on the buckling behavior of $[(\pm\theta)_6]_S$ graphite-epoxy square plates. Finite element results were obtained for stress-loaded plates with all edges simply supported, all edges clamped, and for plates with clamped and simply supported loaded and unloaded edges, respectively. These results predict, for the most part, a monotonic reduction in buckling load with increasing cutout size for values of $0° \le \theta \le 90°$. Moreover, deviations from this trend are typically predicted to occur for approximately $\theta \ge 45°$. For example, plates with $\theta = 60°$ are predicted to exhibit increases in the buckling load with increasing cutout size for each set of boundary conditions considered. The results also predict that the change in buckling load with cutout size generally becomes much smaller for laminates with approximately $\theta \ge 50°$ for each of the three boundary condition cases. Moreover, the buckling loads tend to diminish rapidly with increases in θ beyond approximately 60°. These trends were also predicted earlier by Nemeth (refs. 24 and 25) for similar stress-loaded square plates with all edges simply supported and for plates with the loaded and unloaded edges clamped and simply supported, respectively. Yasui (ref. 38) also predicted practically the same trends for similar simply supported symmetric angle-ply plates approximately a year earlier. In addition, results were presented by Nemeth for the corresponding displacement-loaded plates that also predict similar trends. However, the results also predict less overall sensitivity of the buckling load to cutout size for the displacement-loaded plates than for the stress-loaded plates.

Behavior of Shear-Loaded Square Plates

Shear buckling of square plates that have a central circular cutout represents another fundamental research problem of practical importance. However, the behavior of shear-loaded composite plates has not received nearly as much attention as corresponding compression-loaded plates. Rouse (ref. 34) investigated the effects of laminate stacking sequence, material system, and circular cutout size on shear buckling of square plates. Finite element and experimental results were obtained for several different quasi-isotropic and symmetric laminates consisting of various arrangements of 0°, ±45°, and 90° plies. Laminates made of either graphite-epoxy or graphite-thermoplastic material were investigated. The plates were modeled with clamped edges in order to be consistent with the massive test fixture used in the experimental investigations that were conducted. The finite element results and some corresponding experimental results show a basic trend of monotonic reduction in shear-buckling load with increasing cutout size for both material systems. This trend is rationalized by noting that in each case a substantial destabilizing compressive force acts along the compression diagonal of the plate.

Owen (ref. 33) investigated the basic effects of circular cutout size and plate orthotropy by comparing the behavior of $[(0/90/\pm45)_3]_S$ quasi-isotropic laminates and several symmetric angle-ply laminates. The symmetric

angle-ply plates investigated were $[(\pm\theta)_6]_S$ laminates with values of $\theta = 0°$, 15°, 30°, 45°, 60°, 75°, and 90°. Graphite-epoxy material properties were used for all laminates. Analytical results were obtained for simply supported stress-loaded plates with d/W up to 0.4. The results predict a monotonic reduction in shear buckling load with increasing cutout size for each laminate type; reductions of approximately 50 percent in buckling load are predicted as the cutout size increases from $d/W = 0.1$ to 0.4. Moreover, the results predict higher buckling loads for the laminates with $\theta = 30°$, 45°, and 60° for each cutout size. For these laminates the fibers in the outermost plies are closely aligned with the compression diagonal of the plate. The highest buckling load is predicted for the laminate with $\theta = 45°$ for each cutout size. In this case, the fibers in the outermost plies are exactly aligned with the compression diagonal of the plate.

Jones and Klang (ref. 46) also investigated the effects of circular cutout size and laminate stacking sequence on the shear buckling load of square graphite-epoxy plates with elastically restrained edges. In this study, $[(\pm45/0)_2]_S$, $[(\pm45/90)_2]_S$, and $[(\pm45)_4]_S$ laminates were investigated. Analytical results were obtained for stress-loaded plates with d/W up to 0.5 and with varying degrees of equal elastic rotational restraint on each edge between the bounding cases of clamped and simply supported edges. These results also predict a monotonic reduction in shear buckling load with increasing cutout size for each laminate and for the full range of edge restraint. For each laminate, a reduction of approximately 60 percent in buckling load is predicted as the cutout size increases from $d/W = 0$ to 0.5.

Effects of Plate Aspect Ratio

Marshall, Little, and El Tayeby (ref. 17) obtained experimental and analytical results for rectangular specially orthotropic glass-epoxy plates with $L/W = 2$ and with a central circular cutout. Relative changes in the buckling load, compared to the buckling load of the corresponding plate without a cutout, were presented for compression displacement-loaded plates that show a trend of monotonic increase in relative buckling load with increasing cutout size. Substantial increases in relative buckling load are exhibited by the plates with $d/W > 0.4$. The analyses and experiments indicate that these plates buckle at loads nearly 50 percent higher than the buckling load of the corresponding plate without a cutout. In each case, the plates buckled into two half-waves along the plate length and one half-wave across the width.

These high, relative buckling loads obtained by Marshall and his colleagues can be rationalized using the logic first presented by Vann and Vos (ref. 48) for isotropic plates; i.e., when a plate buckles into two half-waves along the length and a single half-wave across the width, the cutout straddles the nodal line of the deformation pattern. In this region of the plate, the bending action is substantially smaller than at the buckle crests. As a result, the loss in bending stiffness caused by a cutout is not as significant as when the cutout is centered on a buckle crest. Moreover, an increasing amount of the axial load is shifted toward the plate edges as the cutout size increases. The net effect is larger increases in buckling load with increasing cutout size when the cutout straddles a nodal line as opposed to its being centered on the buckle crest. This behavior is referred to herein for convenience (by using the terminology of Vann and Vos) as the contraflexure effect of a cutout.

Nemeth and his colleagues (refs. 6, 7, 24, and 25) investigated the basic effects of plate aspect ratio, orthotropy, and circular cutout size on buckling behavior by comparing analytical results for unidirectional 0° and 90°, $[(0/90)_5]_S$, and $[(\pm\theta)_m]_S$ graphite-epoxy laminates with $m \geq 6$. Compression-loaded simply supported plates and plates with the loaded and unloaded edges clamped and simply supported, respectively, were investigated. The results predict that a cutout can significantly influence the formation of the buckle pattern in a rectangular plate. A long-known basic property exhibited by rectangular plates is the festoon shape of their buckling load-versus-plate-aspect-ratio curves. Near a cusp in these curves, particularly for the smaller values of plate aspect ratio, an increase in the buckling load occurs. In addition, when the bending stiffness that is normal to the loaded edges of a plate D_{11} is increased relative to the stiffness parallel to the loaded edge D_{22}, the spacing of the cusps and their amplitudes can increase dramatically. Similarly, when D_{11}/D_{22} is reduced, the spacing of the cusps and their amplitudes decrease.

The analytical results in references 6, 7, 24, and 25 predict that a central circular cutout can significantly affect the formation of these cusps. One obvious effect is the loss in central bending stiffness caused by the cutout. Results for simply supported unidirectional 0° and $[(\pm15)_m]_S$ displacement-loaded plates predict that the plates with $d/W = 0.6$ exhibit the largest buckling loads as L/W increases. Moreover, the plates in which the cutout straddles the nodal line of the buckle pattern exhibit the higher buckling loads, consistent with the contraflexure effect. Generally, the results for the simply supported plates and the plates with clamped loaded edges predict trends of increasing buckling load with increasing d/W for both stress-loaded and displacement-loaded plates as L/W increases. Moreover, the results predict this trend to be more pronounced as D_{11}/D_{22} increases and when the loaded edges are simply supported.

The results presented in references 6, 7, 24, and 25 also predict that the influence of the bending boundary conditions on the loaded edges (clamped or simply supported) are somewhat sensitive to cutout size but are far more sensitive to plate orthotropy. Generally, the bending boundary conditions become more influential on the buckling load as D_{11}/D_{22} increases and as d/W and L/W decrease.

Results obtained by Nemeth (refs. 24 and 25) for angle-ply laminates predict that as the plate aspect ratio increases, the buckling loads for the corresponding stress-loaded and displacement-loaded plates coalesce. Moreover, the value of L/W at which the coalescence occurs gets smaller as the fiber angle θ increases. This behavior is explained by noting that as the plate aspect ratio increases, the amount of material between the loaded edges of a plate and the central cutout increases. Thus, in accordance with Saint-Venant's principle, the differences in the prebuckling states for the two loading conditions attenuate as the plate aspect ratio increases. Moreover, the more compliant the material is in the loading direction prior to buckling, the more rapid is the attenuation with increases in plate aspect ratio. The results also indicate that the buckling loads for the corresponding stress-loaded and displacement-loaded plates generally increase and decrease with increasing L/W, respectively. This behavior suggests that both distinctly different deformation states for square stress-loaded and displacement-loaded plates attenuate to a common state in which a sizable amount of the axial load is redirected to the unloaded edges by a large cutout.

Yasui and Tsukamura (ref. 22) also investigated the effects of plate aspect ratio and circular cutout size on the behavior of symmetric cross-ply laminates made of graphite-epoxy or glass-epoxy materials. Results were obtained for simply supported stress-loaded plates by using finite element analysis. These results also predict that the cutout size and plate orthotropy significantly affect the formation of the plate buckle pattern. In addition, the results show that the square graphite-epoxy plates exhibit a monotonic reduction in buckling load with increasing d/W and that this trend generally reverses for approximately $1.4 \leq L/W \leq 2.3$. For this range of plate aspect ratios, the plates buckle into two half-waves along the plate length, and the plates with the larger cutouts typically have the higher buckling loads. This behavior is consistent with the contraflexure effect and the attenuation behavior of the prebuckling state previously discussed herein. More precisely, with increasing L/W, the prebuckling states of the stress-loaded plates attenuate to a state in which a substantial amount of axial load is redirected toward the unloaded edges of the plate because of a large cutout. The same trends are predicted for the corresponding glass-epoxy plates, but the sensitivity of the buckling load to d/W is generally less pronounced than for the graphite-epoxy plates. In addition, results predict basically the same trends for corresponding plates with a square cutout that has rounded corners.

Yasui (ref. 38) also obtained similar results for symmetric cross-ply laminates made of either graphite-epoxy or glass-epoxy material and for angle-ply laminates made of graphite-epoxy material. Results were obtained for simply supported stress-loaded plates by using finite element analysis. These results predict essentially the same trends as described in the previous paragraph. In addition, Yasui identified the presence of zones of tensile stress, similar to those predicted for square plates in references 24 and 25, near a large cutout in a plate. Yasui's results predict that these zones of tensile stress grow slightly in magnitude and distribution as the plate aspect ratio increases and that the zones of tensile stress contribute to an increase in the buckling load.

Effects of Cutout Eccentricity

The results obtained by Marshall and his colleagues (ref. 16) are apparently the only available results that address the effects of cutout eccentricity on the buckling behavior of composite plates. These results are for square specially orthotropic glass-epoxy plates loaded in compression by uniform edge displacements. The plates that were investigated are simply supported, have a longitudinally eccentric circular cutout ($d/W = 0.3$ and 0.5), and cutout eccentricities up to 10 percent of the plate length. Experimental results and results obtained from an approximate analysis show a trend of monotonic reduction in buckling load with increases in cutout eccentricity for both cutout sizes. Moreover, the results indicate that the effect of cutout eccentricity becomes more pronounced as the cutout size increases. The largest reduction in buckling load was exhibited by the plates with $d/W = 0.5$ with an eccentricity of approximately 10 percent of the plate length. These plates buckled at loads approximately 30 percent lower than the buckling load of the corresponding plate without a cutout.

Effects of Cutout Shape

Only a few studies have been made that present direct comparisons of the effects of cutout shape on the buckling behavior of composite plates. Yasui and Tsukamura (ref. 22) investigated the effect of cutout shape on the compression buckling behavior of simply supported stress-loaded square plates. In this study, finite element results were obtained for specially orthotropic plates with either a central circular cutout or a central square cutout with rounded corners. In addition, plates made of either glass-epoxy or graphite-epoxy material were investigated. Results for identical plates, one with a

circular cutout and the other with a square cutout with the same width as the circular cutout diameter, were obtained for cutout widths up to 50 percent of the plate width. These results predict that the plates with a circular cutout have higher buckling loads and that the difference in buckling loads caused by cutout shape is slightly more pronounced for the graphite-epoxy plates than for the glass-epoxy plates. In addition, the results predict that the buckling load for a plate with a square cutout is less than about 10 percent different from the buckling load of the corresponding plate with a circular cutout with $d/W \leq 0.3$. Similarly, differences in buckling load caused by cutout shape of approximately 14 and 34 percent were predicted for the glass-epoxy plates with $d/W = 0.4$ and 0.5, respectively. A difference of approximately 21 percent is predicted for the graphite-epoxy plates with $d/W = 0.4$. This behavior is at least partially explained by noting that as the cutout width increases, a plate with a square cutout experiences a larger loss in central bending stiffness than does a plate with a corresponding circular cutout.

Britt (ref. 47) recently studied the effects of elliptical cutout shape on the behavior of square compression-stress-loaded and shear-stress-loaded plates. Graphite-epoxy $[(\pm\theta)_6]_S$ plates with central cutouts were investigated for values of $0° \leq \theta \leq 90°$. Buckling loads were obtained for elliptical cutouts with a major axis length-to-plate-width ratio $d/W = 0.6$ and with cutout aspect ratios $h/d = 1/3$, 2/3, and 1 (fig. 1). For these results, the major axis of the elliptical cutout is normal to the compressive loading direction ($\psi = 0°$). The results obtained by Britt predict basically the same trend for simply supported and clamped plates loaded by either uniaxial compression or shear or by the two loadings combined. In particular, the results predict that significant increases in the buckling load are obtained by reducing the aspect ratio of the elliptical cutout. This effect can be rationalized by noting that as the cutout ratio is reduced, the plate gains central bending stiffness to resist buckling without drastically altering the axial load path. The results also predict that the largest gains in buckling load are for approximately $40° \leq \theta \leq 60°$.

In the same study, Britt investigated the effect of rotating the elliptical cutout by an angle ψ for $[(\pm30)_6]_S$, $[(\pm45)_6]_S$, and $[(\pm45/0/90)_3]_S$ graphite-epoxy square plates. The angle ψ corresponds to a clockwise rotation of the major axis of the elliptical cutout (fig. 1). In addition, several cutout aspect ratios were investigated. Results for simply supported stress-loaded plates predict a monotonic reduction in buckling resistance as the cutout is rotated, and the plates with the high values of h/d exhibit the largest reductions. The biggest and smallest variations in buckling load are predicted for the $[(\pm45)_6]_S$ and $[(\pm45/0/90)_3]_S$ plates, respectively. Corresponding results for shear-loaded plates predict a monotonic reduction in buckling resistance as the cutout is rotated to 45°, followed by monotonic increases in buckling resistance as the cutout is rotated farther. Moreover, the response curves that are given are symmetric about the vertical line on the plots that correspond to $\psi = 45°$. The high aspect ratio cutouts also exhibit the largest reductions, and the biggest and smallest variations in buckling load are also predicted for the $[(\pm45)_6]_S$ and $[(\pm45/0/90)_3]_S$ plates, respectively. Results were also obtained for combined compression and shear load. These results predict that in this case the plates exhibit basically the same trends with respect to cutout aspect ratio and laminate type. The effect of the cutout rotation also is predicted to exhibit, for the most part, monotonic reduction in buckling load with increasing ψ.

Effects of Bending Boundary Conditions

All studies reviewed herein address the effects of bending boundary conditions in some manner. However, Srivatsa and Krishna Murty (ref. 44) and Jones and Klang (ref. 46) have addressed these effects directly for square plates that have a central circular cutout. Finite element results obtained by Srivatsa and Krishna Murty predict that the bending boundary conditions can change entirely the effect of a cutout on the buckling behavior. For example, results for uniaxial stress-loaded $[(0/\pm45/90)]_S$ graphite-epoxy plates predict monotonic reduction in buckling load with d/W for simply supported plates, clamped plates, and plates in which the loaded edges are clamped and the unloaded edges are simply supported. However, results for corresponding plates with the loaded edges simply supported and the unloaded edges clamped show slight reductions in buckling load as d/W increases to approximately 0.3. For larger values of d/W, the buckling load is predicted to increase monotonically.

Jones and Klang investigated the effects of an elastic rotational restraint on the influence of a central circular cutout in compression-loaded and shear-loaded square plates. Analytical results for $[(\pm45/0)_2]_S$ graphite-epoxy laminates predict a monotonic reduction in buckling load with d/W for compression-stress-loaded and shear-stress-loaded plates for the full range of elastic restraint. Compression-displacement-loaded plates are predicted to exhibit a slight reduction in buckling load followed by monotonic increases with increasing d/W. The results also predict that the effect of the elastic restraint on the buckling load is much more pronounced in compression-loaded plates than in shear-loaded square plates and that the influence of the elastic restraint diminishes as the cutout size increases.

Effects of Combined Loading and In-Plane Boundary Conditions

Larsson (ref. 20) studied the effects of compressive biaxial loading on the buckling behavior of square stress-loaded plates that have a central circular cutout. Simply supported, specially orthotropic plates made of E-glass-epoxy material and two different types of boron-epoxy materials were investigated. For each case, finite element results obtained by Larsson predict that the sensitivity of the change in buckling load to changes in cutout size is more pronounced for uniaxially loaded plates than for biaxially loaded plates. Results for clamped boron-epoxy plates with $d/W = 0$ and 0.6 were also obtained by Larsson and predict that biaxially stress-loaded and biaxially displacement-loaded clamped plates, with equal load in each loading direction, buckle at loads approximately 4 and 30 percent higher, respectively, than the buckling loads for corresponding plates without a cutout.

Lee, Lin, and Lin (ref. 26) also obtained finite element results for biaxially stress-loaded (equal magnitude in each direction) square plates that have a central circular cutout. Results for specially orthotropic clamped and simply supported plates with modulus ratios $E_x/E_y = 2$ and $E_x/E_y = 10$ were obtained for cutout sizes up to $d/W = 0.4$. These results predict that the simply supported plates exhibit a trend of monotonic reduction in buckling load with increasing cutout size. Moreover, the results predict practically the same trend for corresponding simply supported plates with the different modulus ratios. The results for the clamped plates show a much different trend and much more sensitivity to the modulus ratio. The clamped plates exhibit a slight reduction in buckling load with increasing d/W followed by a monotonic increase in buckling load. Comparison with results for corresponding uniaxially loaded plates with the same value of modulus ratio predicts that the buckling load of the simply supported plates loaded in biaxial compression is less sensitive to changes in cutout size than that of the uniaxially loaded plates.

Yasui (ref. 38) also studied the effects of biaxial compression loading on rectangular unidirectional 0° and 90° laminates and symmetric cross-ply laminates with plate aspect ratios $0 \le L/W \le 4$. Simply supported plates made of graphite-epoxy material that have a central circular cutout were investigated. Finite element results were obtained for uniaxially and biaxially stress-loaded plates that predict a substantial difference in behavior; i.e., the results predict that plates under equal biaxial compression exhibit monotonic reduction in buckling load with increasing cutout size for the full range of plate aspect ratios considered, unlike the corresponding uniaxially loaded plates. Results were also presented for the cross-ply laminates for several different biaxial compression loading ratios that indicate essentially the same trend.

Yasui (ref. 38) also studied the effects of biaxial compression loading on $[(\pm\theta)_6]_S$ graphite-epoxy rectangular plates with a central circular cutout. Finite element results were obtained for stress-loaded plates with all edges simply supported. Results for square plates predict, for most of the data, a monotonic reduction in buckling load with cutout size for values of $0° \le \theta \le 90°$. In addition, the results predict that the buckling loads for biaxially loaded plates that have equal loading on each edge are much less sensitive to θ and cutout size than the corresponding uniaxially loaded plates. Results for corresponding rectangular plates also predict a trend of monotonic reduction in buckling load with increasing cutout size, unlike corresponding uniaxially loaded plates. However, the longer plates that were considered also showed a much different sensitivity to θ than the square plates did.

Britt (ref. 47) studied the behavior of square plates with a central circular cutout that were subjected to combined uniaxial tension-compression and shear loads. Both the axial and shear loads were applied as uniform edge stresses. Buckling interaction curves were obtained for $[(\pm30)_6]_S$, $[(\pm45)_6]_S$, and $[(\pm45/0/90)_3]_S$ graphite-epoxy plates with $d/W = 0.1$ and 0.3. These results predict that the buckling resistance decreases with increasing cutout size and that the decrease is more pronounced when uniaxial tension is present.

Turvey and Sadeghipour (ref. 21) studied the effects of restraining the in-plane displacements normal to the unloaded edges of square glass-epoxy plates that are loaded in uniaxial compression and have cutout sizes up to $d/W = 0.7$. In this situation, restraining the unloaded edges of the specially orthotropic plates to be immovable induces a biaxial loading state. Results of the Turvey and Sadeghipour finite element analyses for stress-loaded plates predict that buckling loads for the plates with immovable unloaded edges are always less than the buckling load of the corresponding plate with moveable unloaded edges. Moreover, the finite element results predict that the buckling loads of stress-loaded plates with immovable unloaded edges are less than the buckling loads for corresponding displacement-loaded plates for the full range of cutout sizes.

Turvey and Sadeghipour (ref. 23) also studied the effects of in-plane loading conditions and boundary conditions on square shear-loaded plates made of graphite-epoxy material. Finite element results were obtained for clamped $[(\pm45)_4]_S$ laminates with central circular cutout sizes up to $d/W = 0.6$. Furthermore, results were obtained

for shear-stress-loaded, shear-displacement-loaded, and shear-stress-loaded plates with the additional constraint that only one pair of opposite edges remain straight during deformation. These results predict that the shear buckling load is practically independent of the three modes of shear loading that were considered. In each case, the buckling load diminishes monotonically with increasing cutout size, and the reduction is, for the most part, almost a linear function of d/W.

Effects of Anisotropy

Nemeth (refs. 24 and 25) investigated the effects of cutout size on the importance of anisotropy in $[(+60)_6/(-60)_6]_S$ graphite-epoxy laminates loaded in compression. Laminates with these stacking sequences exhibit anisotropy in the form of bending-twisting coupling. Finite element results were obtained for displacement-loaded plates with clamped loaded edges and simply supported unloaded edges. These results predict that the importance of the bending anisotropy in these plates becomes much more pronounced for $d/W > 0.3$. For example, the results predict that neglecting the anisotropy in the analysis of the plate with $d/W = 0.6$ would overestimate the buckling load by about 37 percent, as compared to about 24 percent for the corresponding plate without a cutout.

Turvey and Sadeghipour (ref. 21) investigated the effects of anisotropy on the buckling behavior of compression-loaded unidirectional off-axis plates with a central circular cutout. In particular, finite element results were obtained for stress-loaded square plates made of glass-epoxy material that had a fiber orientation angle $\theta = 45°$ (fig. 1). Plates with this construction exhibit membrane and bending anisotropy in the form of shear-extensional and bending-twisting coupling, respectively. The unloaded edges of the plates were modeled as moveable edges that permit in-plane shearing deformations. These results predict that these stress-loaded anisotropic plates exhibit a trend contrary to that typically exhibited by similar stress-loaded isotropic and orthotropic plates; i.e., the buckling load diminishes with increasing cutout size, reaches a minimum value, and then increases monotonically. The results also predict that clamped plates are much more sensitive to changes in cutout size than corresponding simply supported plates for values of $d/W > 0.25$; i.e., the clamped plates exhibit larger relative increases in buckling load than the corresponding simply supported plates do.

Turvey and Sadeghipour (ref. 23) also investigated the effects of anisotropy on corresponding unidirectional off-axis plates that are loaded by uniform edge shear stress. For the shear loading, the 45° fiber direction is aligned with the tension diagonal of a plate that is associated with the shear load. Finite element results for clamped and simply supported plates predict that shear-loaded anisotropic plates exhibit basically the same trend as corresponding isotropic and orthotropic plates; i.e., the shear buckling load decreases monotonically with increasing cutout size. The results also predict practically the same level of sensitivity to cutout size for the clamped and simply supported plates.

The effects of varying the degree of anisotropy exhibited by the unidirectional off-axis square plates with a central circular cutout were also investigated by Turvey and Sadeghipour (refs. 21 and 23). Both compression-stress-loaded and shear-stress-loaded glass-epoxy plates were investigated. For compression-loaded plates, the fiber angle θ (fig. 1) was varied from 0° to 90°. Finite element results were obtained for plates with $d/W = 0$ and 0.3 with moveable unloaded edges. These results predict that the sensitivity of the buckling load for clamped plates to changes in θ increases dramatically as d/W increases from 0 to 0.3. Corresponding simply supported plates are predicted to be essentially insensitive to the presence of the cutout.

For the shear-loaded plates, the angle θ was varied from –45° to 45°. Values of $\theta = 45°$ and –45° correspond to the fiber direction by being aligned with the tension diagonal and compression diagonal of the square plates, respectively. Finite element results were obtained for stress-loaded plates with $d/W = 0.3$. These results predict that plates with $\theta = -45°$ are the most buckling resistant. This behavior is rationalized by noting that a unidirectional plate has the most bending resistance to the destabilizing compression force when the fiber direction is aligned with the compression diagonal of the plate.

Lin and Kuo (ref. 27) investigated the effects of anisotropy on the buckling behavior of 2-ply and 6-ply antisymmetric cross-ply laminates and 4-ply and 6-ply antisymmetric angle-ply laminates that have a central circular cutout. Laminates with this construction exhibit anisotropy in the form of bending-extensional coupling. As the number of plies that forms these laminates increases, the bending-extensional coupling weakens. Simply supported and clamped plates with relatively small cutout sizes ($d/W \leq 0.3$) were investigated. Moreover, uniaxial compression, biaxial compression with equal loading in each direction, and tension-compression biaxial loadings were investigated. Each loading was applied by specifying uniform edge stresses.

Finite element results obtained by Lin and Kuo for 2-ply and 6-ply antisymmetric cross-ply laminates that are loaded uniaxially predict a general trend of monotonic reduction in buckling load with increasing cutout size. This trend is also predicted for the antisymmetric cross-ply laminates that are subjected to either of the

biaxial loadings. The buckling loads of the uniaxially loaded antisymmetric cross-ply laminates with simply supported or clamped edges are all predicted to exhibit slightly larger reductions in buckling load with increasing d/W as the degree of bending-extensional coupling becomes smaller. This trend is also predicted for the corresponding simply supported plates that are loaded biaxially. Furthermore, the effect is predicted to be more pronounced for the biaxially loaded plates with large tension-load components.

Lin and Kuo also studied the effect of varying the lamina modulus ratio E_1/E_2 of the highly anisotropic [0/90] laminates on the buckling load. Finite element results for simply supported square plates predict that varying the lamina modulus ratio has, for the most part, practically no effect on the relative changes in buckling load with increasing cutout size. They also investigated the effect of varying the fiber angle for 6-ply antisymmetric angle-ply laminates loaded uniaxially. The finite element results obtained for these laminates also predict a general trend of monotonic reduction in buckling load with increasing cutout size. In addition, the relative change in buckling load with cutout size is predicted to generally diminish as the fiber angle θ approaches 90° (fig. 1).

Lin and Kuo also compared the buckling resistance of similar 4-ply antisymmetric and symmetric angle-ply laminates and similar 4-ply antisymmetric and symmetric cross-ply laminates. Angle-ply laminates with angles of 30°, 45°, and 60° between the fiber directions and the loading direction were investigated. In each case and for each cutout size, the antisymmetric angle-ply laminates are predicted to be more buckling resistant than the corresponding symmetric angle-ply laminate. However, the opposite trend is predicted for the cross-ply laminates.

Chang and Shiao (ref. 36) investigated the effects of anisotropy on the thermal buckling behavior of 2-ply and 6-ply antisymmetric angle-ply laminates that have a central circular cutout. Simply supported square plates with relatively small cutout sizes ($d/W \leq 0.3$) were investigated. Destabilizing membrane forces caused by constrained thermal expansion and uniform heating were considered. Finite element results were obtained that predict greater sensitivity of the buckling temperature with increasing d/W for the plates with more bending-extensional coupling. Furthermore, the results predict that the sensitivity of the buckling temperature to changes in d/W is strongly dependent on the fiber orientation angle θ in the plates that have a high degree of bending-extensional coupling. Chang and Shiao also note that in many cases the buckling temperature can increase with increasing cutout size. This trend is similar to the trend for corresponding isotropic plates first published by Sumi and Sekiya (ref. 49).

Chen, Lin, and Chen (ref. 39) investigated the thermal buckling behavior of antisymmetric cross-ply laminates with d/W as large as 0.6. Finite element results that were obtained generally predict a trend of monotonic reduction in buckling temperature with increasing d/W. The sensitivity of the buckling temperature to changes in d/W was also predicted to be lower for corresponding laminates with greater bending-extensional coupling.

Jones and Klang (ref. 46) investigated the effects of anisotropy on the buckling behavior of unidirectional off-axis laminates with $\theta = 30°$ (fig. 1) that have a central circular cutout. Analytical results were obtained for compressive stress-loaded and displacement-loaded square plates made of graphite-epoxy material with edges that are elastically restrained against rotation. These results predict that the displacement-loaded anisotropic plates exhibit a trend similar to that exhibited by similar displacement-loaded isotropic plates for the full range of elastic restraint; i.e., the buckling load diminishes with increasing cutout size, reaches a minimum value, and then increases monotonically. Similarly, the results predict that the stress-loaded anisotropic plates exhibit a trend similar to that exhibited by similar stress-loaded isotropic plates which exhibit a monotonic reduction in buckling load with increasing d/W. The results also predict that the effect of the cutout on the buckling load becomes more pronounced as the amount of rotational restraint increases and that this effect is more pronounced in stress-loaded plates than in displacement-loaded plates.

Jones and Klang also obtained results for elastically restrained $[(\pm 45/0)_2]_S$ shear-stress-loaded laminates. These results predict that the effect of bending anisotropy on the buckling load decreases slightly with increasing cutout size and that the trend is valid for the full range of elastic restraint.

Effects of Plate Thickness

Lin and Kuo (ref. 27) investigated the effects of plate thickness on the buckling behavior of 6-ply antisymmetric cross-ply laminates that have a central circular cutout and are loaded in biaxial compression. Laminates with this construction exhibit anisotropy in the form of bending-extensional coupling. Simply supported and clamped square plates with relatively small cutout sizes ($d/W \leq 0.3$) were investigated. The biaxial compression load was applied by specifying equal uniform stresses on each edge of a plate.

Finite element results obtained by Lin and Kuo, based on shear deformation plate theory, predict that the

buckling load of the clamped plates is very sensitive to the plate width-to-thickness ratio W/t. The results also predict that the buckling load of the corresponding simply supported plates is practically insensitive to W/t. Furthermore, the results predict a trend of increasing sensitivity with increasing cutout size for the clamped plates.

Chang and Shiao (ref. 36) investigated the effects of plate thickness on the thermal buckling behavior of 2-ply and 6-ply antisymmetric angle-ply laminates that have a central circular cutout. Simply supported square plates with relatively small cutout sizes ($d/W \leq 0.3$) were investigated. Finite element results that were obtained predict that the sensitivity of the buckling temperature to d/W increases as W/t increases. This effect is also predicted to be more pronounced in the plates with a higher degree of bending-extensional coupling. Finite element results obtained by Chen, Lin, and Chen (ref. 39) for simply supported square [(0/90/0/90)] laminates that are subjected to a uniform temperature rise predict the opposite trend; i.e., the sensitivity of the buckling temperature to d/W decreases slightly as W/t increases.

Ram and Sinha (ref. 43) investigated the effects of plate thickness on the buckling of square simply supported plates that are subjected to hygrothermal loads. Results for $[(0/90)]_S$ and $[(\pm 45)_2]_T$ graphite-epoxy laminates predict that the buckling behavior of thin laminates with a cutout is extremely sensitive to moisture content. Moreover, this effect becomes more pronounced as the cutout size increases.

Unconventional Laminate Construction

Hyer and Charette (ref. 28) and Hyer and Lee (ref. 40) have studied the use of curvilinear fiber geometry in the laminate construction of square composite plates that have a central circular cutout. Compression displacement-loaded graphite-epoxy plates with $d/W = 1/3$ and simply supported on all edges were investigated. Finite element results predict that significant improvements in the buckling resistance may be possible by using curvilinear fiber geometry in laminate construction as compared to conventional straight-fiber laminate construction. Furthermore, some laminate designs are given that are predicted to have improved tensile load capacity in addition to improved buckling resistance.

Postbuckling Behavior Results

There are substantially more studies of buckling behavior than of postbuckling behavior of composite plates that have a cutout. Moreover, most of the studies of postbuckling behavior are for compression-loaded square plates, and not many of those studies identify behavioral trends. However, the studies have identified a few key aspects of the postbuckling behavior of composite plates that have a central circular cutout. These findings are presented in this section of the present paper. Results are presented first for compression-loaded square plates and then for shear-loaded square plates.

Behavior of Compression-Loaded Square Plates

The finding that some displacement-loaded plates with a large cutout buckle at loads that are substantially larger than a corresponding plate without a cutout raises some important questions. These questions deal with the issue of postbuckling stiffness and load-carrying capacity; i.e., do plates with large cutouts exhibit stable postbuckling behavior? Martin (ref. 1) investigated the postbuckling behavior of square composite plates with a central circular cutout that are loaded in uniaxial compression by uniform edge stress. Approximate analytical results were obtained for simply supported $[0/\pm 45/90]_S$, unidirectional 0°, and $[(\pm 45)]_T$ glass-epoxy plates with $0 \leq d/W \leq 0.5$. These results and some corresponding experimental results indicate that the plates exhibit stable postbuckling behavior for all cutout sizes considered. Moreover, the analytical results predict a trend of monotonic reduction in postbuckling stiffness with increasing cutout size. Analytical results were also obtained for $[(0/90)]_T$ boron-epoxy plates that predict large out-of-plane displacements at the onset of loading and a general trend of monotonic reduction in apparent in-plane stiffness in the loading direction with increasing cutout size.

VandenBrink and Kamat (refs. 14 and 15) investigated the postbuckling behavior of compression-loaded square plates that have a central circular cutout. Results of finite element analyses were presented for simply supported isotropic plates and $[(+60)_5/(-60_5)]_S$ graphite-epoxy plates. The finite element meshes used in the analyses were 1/4-plate models that exploit the behavior of orthogonal planes of reflective symmetry or antisymmetry. However, these particular angle-ply laminates are highly anisotropic and do not exhibit behavior consistent with the symmetry of the mesh. The results are more representative of $[(\pm 60)_5]_S$ laminates, which possess much less bending anisotropy.

Results obtained by VandenBrink and Kamat for isotropic plates without a cutout predict that square stress-loaded plates have slightly less postbuckling stiffness than corresponding displacement-loaded plates. This finding is consistent with the fact that the stress-loaded plate has more centrally located compressive stresses since the applied traction remains evenly distributed across the width during loading. Results for displacement-loaded isotropic plates with $d/W = 0$, 0.2, 0.4, and 0.6 and for stress-loaded $[(\pm 60)_5]_S$ laminate plates with $d/W = 0$, 0.2, and 0.6 predict that all the plates

exhibit stable postbuckling behavior. Moreover, the results predict a trend of monotonic reduction in postbuckling stiffness with increasing cutout size. In addition, the results predict that the isotropic plates are relatively stiffer than the angle-ply plates for each cutout size.

Larsson (ref. 20) conducted finite element analyses of simply supported square plates that have a central circular cutout and that are either uniaxially or biaxially stress loaded. Isotropic plates and specially orthotropic plates made of boron-epoxy material were investigated. Results were obtained for plates with $d/W = 0$ and 0.6. These results predict stable postbuckling behavior for all the plates and substantial losses in postbuckling stiffness caused by the cutout for the uniaxially loaded plates. Moreover, the results predict that the sensitivity of the postbuckling stiffness to cutout size diminishes when the plates are loaded biaxially. The results also generally predict slightly larger relative losses in postbuckling stiffness for the boron-epoxy plates than for the isotropic plates.

Marshall and his colleagues (ref. 19) investigated the effects of circular cutout size on the postbuckling membrane stress distribution at the plate midlength for displacement-loaded square plates. Specially orthotropic plates made of glass-polyester material, with $d/W = 0.2$ and 0.4, and having simply supported edges were investigated. Both analytical and experimental results for the plate with $d/W = 0.2$ show normal stress distributions that are typical of plates with a small cutout; i.e., a stress concentration next to the cutout for loads near the buckling load and most of the load at the unloaded edges for loads approximately three times the buckling load. However, the results show a general trend in which the normal stress at the cutout and the normal stress at the unloaded edges increases and decreases in magnitude, respectively, as d/W increases. Thus, the plate with the larger cut- out has a significantly different stress distribution at the cutout.

Horn and Rouhi (refs. 29 and 30) investigated the postbuckling behavior of square compression-loaded laminates with a central circular cutout. Sixty 16-ply graphite-epoxy and graphite-thermoplastic laminates and similar aluminum plates were tested for cutout sizes up to $d/W = 0.7$. The test specimens were displacement loaded and clamped on the loaded edges and simply supported on the unloaded edges. The experimental results show that all the panels carried a load several times the corresponding buckling loads. In addition, the results show that the ultimate load of the plates decreased monotonically with increasing cutout size. This trend was more pronounced for the aluminum and graphite-thermoplastic plates than for the graphite-epoxy plates.

Nemeth (ref. 31) experimentally investigated the postbuckling behavior of square compression-loaded graphite-epoxy plates that have a central circular cutout. Results were obtained for displacement-loaded isotropic plates, unidirectional 0° and 90° laminates, $[(0/90)_5]_S$ laminates, and $[(\pm\theta)_6]_S$ laminates with $\theta = 30°$, 45°, and 60° (fig. 1). The test specimens were clamped on the loaded edges and simply supported on the unloaded edges. These results show stable postbuckling behavior for all the plates, and many of the plates with large cutouts exhibit substantial postbuckling load-carrying ability. The results also show that the laminates with $\theta = 45°$ and 60° and with $d/W = 0.66$ exhibit substantial nonlinear prebuckling deformations caused by material nonlinearity. With respect to overall trends, the results generally show a monontonic reduction in initial postbuckling stiffnesses with increasing cutout size for all plates except the unidirectional 90° laminates. These laminates exhibited sizable increases in initial postbuckling stiffness with increasing cutout size. The unidirectional 0° laminates and the laminates with $\theta = 30°$ exhibited the smallest changes in initial postbuckling stiffness with increasing cutout size. Moreover, the isotropic plates and the $[(0/90)_5]_S$ laminates exhibit practically the same relative reductions in initial postbuckling stiffness with increasing cutout size.

Lee and Hyer (refs. 41 and 42) investigated the effects of laminate stacking sequence on the postbuckling failure characteristics of compression-loaded square plates that have a central circular cutout with $d/W = 0.3$. Sixteen-ply $[(\pm45/0/90)_2]_S$, $[(\pm45/0_2)_2]_S$, $[\pm45/0_6]_S$, and $[(\pm45)_4]_S$ graphite-epoxy laminates were investigated. The plates were displacement loaded and clamped on the loaded edges and simply supported on the unloaded edges. All the laminates with 0° plies failed at loads nearly seven times their corresponding buckling loads. The $[(\pm45)_4]_s$ laminates exhibited material nonlinearity and failed at loads nearly four times their buckling loads. Moreover, the $[(\pm45/0/90)_2]_S$ and $[(\pm45/0_2)_2]_S$ laminates exhibited fiber compression failures at the midlength of one or both unloaded edges of the plates. The $[\pm45/0_6]_S$ and $[(\pm45)_4]_S$ laminates exhibited interlaminar shear and intralaminar shear failures at the unloaded edges of the plates, respectively.

Behavior of Shear-Loaded Square Plates

Herman (ref. 5) investigated the postbuckling behavior of square graphite-epoxy shear webs with a central circular cutout. Experimental results were obtained for displacement-loaded $[(45_2/0)]_S$ laminates made from graphite-epoxy cloth with $d/W = 0$ and 0.45. These results show that the plates with the large cutout exhibit stable postbuckling behavior and substantial postbuckling strength. In particular, these plates carried loads

nearly 11 times their corresponding buckling loads. Results for corresponding plates without a cutout exhibited nearly double the postbuckling load-carrying capacity of the plates with $d/W = 0.45$.

Rouse (ref. 34) basically conducted an experimental investigation of the effects of laminate stacking sequence, material system, and circular cutout size on the postbuckling of shear-loaded square plates. Experimental results were obtained for several different quasi-isotropic and symmetric laminates made of either graphite-epoxy or graphite-thermoplastic material. The experimental results show a trend of monotonic reduction in ultimate load with increasing cutout size for both material systems. Results for 16-ply $[(0/90/\pm45)_2]_S$ graphite-epoxy laminates with $d/W = 0$, 0.08 and 0.25 also show a trend of increasing postbuckling stiffness with increasing cutout size. However, results for 24-ply $[(0/90/\pm45)_3]_S$ graphite-epoxy laminates with $d/W = 0$, 0.06, and 0.25 show a trend of decreasing postbuckling stiffness with increasing cutout size. Similar plates made of graphite-thermoplastic material showed the same trend.

Concluding Remarks

Many results are contained in the studies described herein and several key findings of these studies have been presented and discussed. In the process of organizing this information, several important points have surfaced. Both special purpose analytical methods and more general finite element methods have distinct advantages of their own. The special purpose analyses are typically more limited in scope than the finite element methods, but they have been used to conduct extensive parametric studies of buckling behavior. These simple approximate analyses are valuable because they can easily establish behavioral trends that are in good qualitative agreement with experimental data. Often the accuracy is to within the accuracy of how well the actual material properties are known. Finite element methods are typically more accurate analyses, and their value becomes obvious when a high degree of fidelity is needed to articulate certain points of a behavioral trend.

Another point that surfaced in the present paper is that the understanding of buckling behavior of plates that have a cutout is very fragmented. There is a definite need for studies that attempt to isolate and articulate each fundamental aspect of the behavior in a consistent manner. Moreover, there is a need for more comparisons with experimental data to substantiate analytical results. These comparisons are needed particularly in studies dealing with laminate thickness effects, bifurcation buckling behavior of unsymmetrically laminated plates, or any type of counterintuitive behavior. This experimental verification is necessary in order to attract the interest of structural designers and to stimulate the development of innovative designs.

Another important point that surfaced in the present paper is the basic lack of knowledge concerning the postbuckling behavior of composite plates that have a cutout. Ultimately, to obtain high-performance lightweight structures, postbuckling load-carrying ability must be exploited. Thus, to develop innovative designs, postbuckling behavioral trends for composite plates that have a cutout must be established and experimentally verified.

In closing, results discussed in the present paper indicate that plates made of advanced composite materials have great potential for structural tailoring. This fact alone has great practical implications. To realize this potential, considerable research still must be done to obtain a unified understanding of the many facets of buckling and particularly the postbuckling behavior of composite plates that have a cutout.

NASA Langley Research Center
Hampton, VA 23681-0001
February 29, 1996

References

1. Martin, James: Buckling and Postbuckling of Laminated Composite Square Plates With Reinforced Central Holes. Ph.D. Diss., Case Western Reserve Univ., 1972.

2. Knauss, J. F.; Starnes, J. H., Jr.; and Henneke, E. G., II: *The Compressive Failure of Graphite/Epoxy Plates With Circular Holes*. VPI-E-78-5, Virginia Polytechnic Inst. & State University, Feb. 1978.

3. Preobrazhenskii, I. N.: Research Pertaining to Stability of Thin Plates With Holes. *Soviet Appl. Mech*., vol. 16, no. 7, Jan. 1981, pp. 557–574.

4. Ter-Emmanuil'ian, N. IA.: Stability of an Orthotropic Square Plate With a Square Plate With Holes. *Mekhanika Polimerov*, vol. 7, May–June 1971, pp. 482–488.

5. Herman, R. J.: Postbuckling Behavior of Graphite/Epoxy Cloth Shear Panels With 45°-Flanged Lightening Holes. M. S. Thesis, Naval Postgraduate School, Monterey, California, March 1982.

6. Nemeth, Michael Paul: Buckling Behavior of Orthotropic Composite Plates With Centrally Located Cutouts. Ph.D. Diss., Virginia Polytechnic Inst. & State Univ., May 1983.

7. Nemeth, M. P.; Johnson, E. R.; Stein, M.; and Kamat, M. P.: *Buckling Behavior of Orthotropic Composite Plates With Centrally Located Cutouts*. VPI-E-83-21, Virginia Polytechnic Inst. & State Univ., June 1983.

8. Kantorovich, L. V.; and Krylov, V. I. (Curtis D. Benster, transl.): *Approximate Methods of Higher Analysis*. Interscience Publ., Inc., 1964.

9. Nemeth, Michael P.: *A Buckling Analysis for Rectangular Orthotropic Plates With Centrally Located Cutouts*. NASA TM-86263, 1984.

10. Marshall, I. H.; Little, W.; and El Tayeby, M. M.: The Stability of Composite Panels With Holes. *Proceedings of Reinforced Plastics Congress* (Brighton, UK), 1984, pp. 139–142.

11. Marshall, I. H.; Little, W.; and El Tayeby, M. M.: The Stability of Composite Panels With Holes. *Mechanical Characterization of Load Bearing Fibre Composite Laminates*, A. H. Cardon and G. Verchery, eds., 1985, pp. 235–242.

12. Kirsch, R.: Die Theorie der Elastizitat und Die Bedurfnisse der Festigkeitslehre. *Zeitschrift Verein Duetscher Ingenieure*, July 1898.

13. Kumai, Toyoji: Elastic Stability of the Square Plate With a Central Circular Hole Under Edge Thrusts. *Proceedings of the 1st Japan National Congress for Applied Mechanics*, 1951, pp. 81–86.

14. VandenBrink, Dennis J.; and Kamat, Manohar P.: Post-Buckling Response of Isotropic and Laminated Composite Square Plates With Circular Holes. *Fifth International Conference on Composite Materials*, W. C. Harrigan, Jr., J. Strife, and A. K. Dhingra, eds., Metallurgical Soc., Inc., 1985, pp. 1393–1409.

15. VandenBrink, Dennis J.; and Kamat, Manohar P.: Post-Buckling Response of Isotropic and Laminated Composite Square Plates With Circular Holes. *Finite Elem. Anal. & Design*, vol. 3, Oct. 1987, pp. 165–174.

16. Marshall, I. H.; Little, W.; El Tayeby, M. M.; and Williams, J.: Buckling of Perforated Composite Plates—An Approximate Solution. *Proceedings of the Second International Conference on Fibre Reinforced Composites 1986*, Mech. Eng. Publ., 1986, pp. 29–33.

17. Marshall, I. H.; Little, W.; and El Tayeby, M. M.: Composite Panels With Circular Cut-Outs: Some Design Guidelines. *Proceedings Reinforced Plastics Congress* (Nottingham, UK), 1986, pp. 91–94.

18. Nemeth, Michael P.; Stein, Manuel; and Johnson, Eric R.: *An Approximate Buckling Analysis for Rectangular Orthotropic Plates With Centrally Located Cutouts.* NASA TP-2528, 1986.

19. Marshall, I. H.; Little, W.; and El-Tayeby, M. M.: Membrane Stress Distributions in Post-Buckled Composite Plates With Circular Holes. *Sixth International Conference on Composite Materials and Second European Conference on Composite Materials*, Elsevier Appl. Sci., 1987, pp. 5.57–5.68.

20. Larsson, Per-Lennart: On Buckling of Orthotropic Compressed Plates With Circular Holes. *Composit. Struct.*, vol. 7, no. 2, 1987, pp. 103–121.

21. Turvey, G. J.; and Sadeghipour, K.: Compression Buckling of Anisotropic Fibre-Reinforced Flat Rectangular Plates With Central Circular Cut-Outs. *Sixth International Conference on Composite Materials and 2nd European Conference on Composite Materials*, Elsevier Appl. Sci., 1987, pp. 5.47–5.56.

22. Yasui, Yoshiaki; and Tsukamura, Kiyoshi: Buckling Strength of Rectangular FRP Plate With a Hole. *J. Japan Soc. Mater. Sci*., vol. 37, Sept. 1988, pp. 1050–1056.

23. Turvey, G. J.; and Sadeghipour, K.: Shear Buckling of Anisotropic Fibre-Reinforced Rectangular Plates With Central Circular Cut-Outs. *Computer Aided Design in Composite Material Technology: Proceedings of the International Conference*, Carlos A. Brebbia, W. R. Blain, and W. P. De Wilde, eds., Apr. 1988, pp. 459–473.

24. Nemeth, M. P.: Buckling Behavior of Compression-Loaded Symmetrically Laminated Angle-Ply Plates With Holes. *Proceedings of the 27th AIAA, ASME, ASCE, AHS, and ASC, Structures, Structural Dynamics and Materials Conference*, Apr. 1986.

25. Nemeth, Michael P.: Buckling Behavior of Compression-Loaded Symmetrically Laminated Angle-Ply Plates With Holes. *AIAA J*., vol. 26, no. 3, Mar. 1988, pp. 330–336.

26. Lee, Y. J.; Lin, H. J.; and Lin, C. C.: A Study on the Buckling Behavior of an Orthotropic Square Plate With a Central Circular Hole. *Composit. Struct.*, vol. 13, no. 3, 1989, pp. 173–188.

27. Lin, Chien-Chang; and Kuo, Ching-Suong: Buckling of Laminated Plates With Holes. *J. Composit. Mater.*, vol. 23, June 1989, pp. 536–553.

28. Hyer, M. W.; and Charette, R. F.: The Use of Curvilinear Fiber Format in Composite Structure Design. *Proceedings of the 30th AIAA, ASME, ASCE, AHS, and ASC, Structures, Structural Dynamics and Materials Conference*, Apr. 1989, pp. 2137–2145.

29. Horn, Walter J.; and Rouhi, Massud: *A Comparison of the Post-Buckling Behavior of Metallic and Composite Plates With Centrally Located Cutouts*. IAR-89-11, PB91-164194, Sept. 1986, Jul. 1989.

30. Rouhi, M.; and Horn, W. J.: *Comparison of the Post-Buckling Behavior of Metallic and Composite Plates With Centrally Located Cutouts*. NIAR-90-14, PB91-118844, May 1990.

31. Nemeth, Michael P.: *Buckling and Postbuckling Behavior of Square Compression-Loaded Graphite-Epoxy Plates With Circular Cutouts.* NASA TP-3007, 1990.

32. Owen, Vicki L.; and Klang, Eric C.: Shear Buckling of Specially Orthotropic Plates With Centrally Located Cutouts. *Eighth DOD/NASA/FAA Conference on Fibrous Composites in Structural Design*, Part 2, Sept. 1990, pp. 695–706.

33. Owen, Vicki L.: Shear Buckling of Anistropic Plates With Centrally Located Circular Cutouts. M.S. Thesis, North Carolina State Univ., 1990.

34. Rouse, Marshall: Effect of Cutouts or Low-Speed Impact Damage on the Postbuckling Behavior of Composite Plates Loaded in Shear. *Proceedings of the 31st AIAA, ASME, ASCE, AHS, ASC, Structures, Structural Dynamics and Materials Conference*, Apr. 1990, pp. 877–891.

35. Vellaichamy, S.; Prakash, B. G.; and Brun, S.: Optimum Design of Cutouts in Laminated Composite Structures. *Comput. & Struct.*, vol. 37, no. 3, 1990, pp. 241–246.

36. Chang, Jeng-Shain; and Shiao, Feng-Jen: Thermal Buckling Analysis of Isotropic and Composite Plates With a Hole. *J. Therm. Stresses*, vol. 13, no. 3, 1990, pp. 315–332.

37. Sadeghipour, K.: Finite Element Computer Aided Analysis of Composite Panels Under In Plane Shear/Compression Buckling. *Computers in Engineering 1990—Proceedings of the ASME International Computers in Engineering Conference and Exposition*, Aug. 1990, pp. 243–248.

38. Yasui, Yoshiaki: The Buckling of Rectangular Composite Plates With Cutout Under Uniaxial and Biaxial Compression. *Proceedings of the 8th International Conference on Composite Materials*, July 1991, pp. 4-B-1–4-B-8.

39. Chen, Wann J.; Lin, Psang D.; and Chen, Lien W.: Thermal Buckling Behavior of Composite Laminated Plates With a Circular Hole. *Composit. Struct.*, vol. 18, no. 4, 1991, pp. 379–397.

40. Hyer, M. W.; and Lee, H. H.: The Use of Curvilinear Fiber Format to Improve Buckling Resistance of Composite Plates With Central Circular Holes. *Composit. Struct.*, vol. 18, no. 3, 1991, pp. 239–261.

41. Lee, H. H: Postbuckling Failure of Composite Plates With Central Holes. Ph.D. Diss., Virginia Polytechnic Inst. & State Univ., Dec. 1991.

42. Lee, H. H.; and Hyer, M. W.: Postbuckling Failure of Composite Plates With Holes. *Proceedings of the 33rd AIAA, ASME, ASCE, AHS, ASC Structures, Structural Dynamics and Materials Conference*, Apr. 1992, pp. 201–211.

43. Ram, K. S. S.; and Sinha, P. K.: Vibration and Buckling of Laminated Plates With a Cutout in Hygrothermal Environment. *AIAA J.*, vol. 30, no. 9, Sept. 1992, pp. 2353–2355.

44. Srivatsa, K. S.; and Krishna Murty, A. V.: Stability of Laminated Composite Plates With Cut-outs. *Comput. & Struct.*, vol. 43, no. 2, Apr. 1992, pp. 273–279.

45. Jones, Kevin Michael: Buckling Analysis of Fully Anisotropic Plates Containing Cutouts and Elastically Restrained Edges. M.S. Thesis, North Carolina State Univ., 1992.

46. Jones, Kevin M.; and Klang, Eric C.: Buckling Analysis of Fully Anisotropic Plates Containing Cutouts and Elastically Restrained Edges. *Proceedings of the 33rd AIAA, ASME, ASCE, AHS, ASC Structures, Structural Dynamics and Materials Conference*, Apr. 1992, pp. 190–200.

47. Britt, V. O.: Shear and Compression Buckling Analysis for Anisotropic Panels With Centrally Located Elliptical Cutouts. *Proceedings of the 33rd AIAA, ASME, ASCE, AHS, ASC Structures, Structural Dynamics and Materials Conference*, Apr. 1993, pp. 2240–2249.

48. Vann, W. Pennington; and Vos, Robert G.: *Compressive Buckling of Pierced Elastic Plates*. Structural Research at Rice, Report No. 14, Rice Univ. (Houston, Texas), Aug. 1972.

49. Sekiya, T.; and Sumi, N.: Thermal Stresses and Thermal Buckling of a Rectangular Plate With a Central Circular Hole. *Third International Conference on Structural Mechanics and Reactor Technology* (London), Vol. 5, Sept. 1975, pp. 1–11.

50. Ritchie, D.; and Rhodes, J.: Buckling and Post-Buckling Behavior of Plates With Holes. *Aeronaut. Q.*, vol. 26, pt. 4, Nov. 1975, pp. 281–296.

51. Kawai, T.; and Ohtsubo, H.: A Method of Solution for the Complicated Buckling Problems of Elastic Plates With Combined Use of Rayleigh-Ritz's Procedure in the Finite Element Method. *Proceedings of the Second Conference on Matrix Methods in Structural Mechanics*, AFFDL-TR-68-150, U.S. Air Force, 1968, pp. 967–994.

52. Grosskurth, J. F., Jr.; White, R. N.; and Gallagher, R. H.: Shear Buckling of Square Perforated Plates. *J. Eng. Mech. Div., American Soc. Civ. Eng.*, vol. 102, Dec. 1976, pp. 1025–1040.

53. Rockey, K. C.; Anderson, R. G.; and Cheung, Y. K.: The Behavior of Square Shear Webs Having a Circular Hole. *Thin Walled Steel Structures*, K. C. Rockey and H. V. Hill, eds., Gordon and Breach (London, UK), 1968, pp. 48–172.

REPORT DOCUMENTATION PAGE

Form Approved
OMB No. 0704-0188

Public reporting burden for this collection of information is estimated to average 1 hour per response, including the time for reviewing instructions, searching existing data sources, gathering and maintaining the data needed, and completing and reviewing the collection of information. Send comments regarding this burden estimate or any other aspect of this collection of information, including suggestions for reducing this burden, to Washington Headquarters Services, Directorate for Information Operations and Reports, 1215 Jefferson Davis Highway, Suite 1204, Arlington, VA 22202-4302, and to the Office of Management and Budget, Paperwork Reduction Project (0704-0188), Washington, DC 20503.

1. AGENCY USE ONLY *(Leave blank)*

2. REPORT DATE
July 1996

3. REPORT TYPE AND DATES COVERED
Technical Paper

4. TITLE AND SUBTITLE
Buckling and Postbuckling Behavior of Laminated Composite Plates With a Cutout

5. FUNDING NUMBERS
WU 505-63-50-08

6. AUTHOR(S)
Michael P. Nemeth

7. PERFORMING ORGANIZATION NAME(S) AND ADDRESS(ES)
NASA Langley Research Center
Hampton, VA 23681-0001

8. PERFORMING ORGANIZATION REPORT NUMBER
L-17503

9. SPONSORING/MONITORING AGENCY NAME(S) AND ADDRESS(ES)
National Aeronautics and Space Administration
Washington, DC 20546-0001

10. SPONSORING/MONITORING AGENCY REPORT NUMBER
NASA TP-3587

11. SUPPLEMENTARY NOTES
This work was done under the Floyd Thompson Fellowship. This paper was previously published as a chapter in *Buckling and Postbuckling of Composite Plates*, G. J. Turvey and I. H. Marshall, eds., Chapman and Hall Ltd., Dec. 1994.

12a. DISTRIBUTION/AVAILABILITY STATEMENT
Unclassified–Unlimited
Subject Category 24
Availability: NASA CASI (301) 621-0390

12b. DISTRIBUTION CODE

13. ABSTRACT *(Maximum 200 words)*
This paper addresses the effects of a cutout on the buckling and postbuckling behavior of rectangular plates made of advanced composite materials. An overview of past research is presented, and several key findings and behavioral characteristics are discussed. These findings include the effects of cutout size, shape, eccentricity, and orientation; plate aspect and slenderness ratios; loading and boundary conditions; and plate orthotropy and anisotropy. Some overall important findings of these studies are that plates that have a cutout can buckle at loads higher than the buckling loads for corresponding plates without a cutout and can exhibit substantial postbuckling load-carrying capability. In addition, laminate construction, coupled with cutout geometry, offers a viable means for tailoring structural response.

14. SUBJECT TERMS
Buckling; Postbuckling; Cutouts; Plates; Composites

15. NUMBER OF PAGES
24

16. PRICE CODE
A03

17. SECURITY CLASSIFICATION OF REPORT
Unclassified

18. SECURITY CLASSIFICATION OF THIS PAGE
Unclassified

19. SECURITY CLASSIFICATION OF ABSTRACT
Unclassified

20. LIMITATION OF ABSTRACT