AIAA'86

AIAA 86-1877
AERODYNAMICS VIA ACOUSTICS: Application of Acoustic Formulas for Aerodynamic Calculations

F. Farassat, NASA Langley Research Center and M.K. Myers, The George Washington University, JIAFS

AIAA 10th Aeroacoustics Conference

July 9-11, 1986/Seattle, Washington

For permission to copy or republish, contact the American Institute of Aeronautics and Astronautics
1633 Broadway, New York, NY 10019

AERODYNAMICS via ACOUSTICS:
Application of Acoustic Formulas for Aerodynamic Calculations

F. Farassat*
NASA Langley Research Center
Hampton, Virginia 23665

M. K. Myers**
The George Washington University
Joint Institute for Advancement of Flight Sciences
Hampton, Virginia 23665

Abstract

Prediction of aerodynamic loads on bodies in arbitrary motion is considered from an acoustic point of view, i.e., in a frame of reference fixed in the undisturbed medium. An inhomogeneous wave equation which governs the disturbance pressure is constructed and solved formally using generalized function theory. When the observer is located on the moving body surface there results a singular linear integral equation for surface pressure. Two different methods for obtaining such equations are discussed. Both steady and unsteady aerodynamic calculations are considered. Two examples are presented, the more important being an application to propeller aerodynamics. Of particular interest for numerical applications is the analytical behavior of the kernel functions in the various integral equations.

Introduction

Aerodynamics is a fascinating but somewhat strange field. It is fascinating because it continues to offer many interesting practical problems which must be solved or are in need of better solutions. It is strange compared to other fields of science because most available analytical methods of attacking aerodynamic problems are indirect in the following sense. In aerodynamics one rarely starts with a differential equation and boundary conditions and then proceeds to solve a problem. Of course this state of affairs occurs because no general analytical method of solution of the Euler or Navier-Stokes equations is known. Even when linearized theories are used, quite often the direct method of solution is avoided. Instead, one starts with doublet or vortex distributions over a surface and derives an integral equation in terms of the unknown source strength. These methods, although correct, are somewhat unsatisfactory because they require a great deal of physical insight and knowledge of physics. As a result, engineers and students often find aerodynamics a much more difficult subject than need be. It is one of the purposes of this paper to propose a method to remedy this circumstance through the use of acoustic equations. We limit ourselves to linear aerodynamics only. Our main objective is to obtain results for prediction of aerodynamic loads on rotating blades. A comprehensive review article on this subject has been written recently by Johnson [1].

It has long been known that linear aerodynamics and acoustics are closely related [2]. This fact has been exploited before by many researchers such as Garrick [3] and Kondo [4]. More recently, Hanson has specialized his acoustic formulations for rotating blades to apply to aerodynamic prediction [5]. His velocity potential approach is closely related to that of Kondo [4] and involves infinite series of special functions which can cause computational problems. It is also restricted to propeller-like motion and thus cannot be adapted easily to propellers with non-uniform inflow or to helicopter rotors.

Das has made significant contributions to the application of concepts from acoustics to linear aerodynamics [6]. His work is closely related to the first of two methods presented here. His approach, however, is from the point of view of singularity distributions which for reasons discussed above is avoided here. The approach presented here also bypasses much of the lengthy algebraic manipulation common in singularity distribution methods.

The approach we propose here is based on the solution of the wave equation in the time domain and in a frame fixed to the undisturbed medium. Consequently, compressibility effects are automatically included in the analysis. This unconventional approach can cause some difficulty for those who are accustomed to working in a co-moving frame, i.e., a frame fixed to the moving body. However, this difficulty is compensated for by results of great generality and usefulness. Starting with an acoustic equation for a body in arbitrary motion, we can derive an aerodynamic integral equation by moving the observer onto the surface of the body. Both steady and unsteady motion are considered. Two different methods for deriving an integral equation are discussed. Surprisingly, the simpler one applies only to unsteady periodic and steady camber problems but not to the steady angle of attack problem. Essentially, the unsteady aerodynamic problem is an acoustic problem in a sense that will be explained later.

The origin of this paper is a set of lecture notes written for a short course on acoustics and aerodynamics of propellers at the von Karman Institute [7]. Long has demonstrated the usefulness of the acoustic approach by deriving an integral equation and working out several numerical examples

*Senior Research Scientist. Associate Fellow AIAA.
**Professor. Associate Fellow AIAA.

This paper is declared a work of the U.S. Government and is not subject to copyright protection in the United States.

[8]. More recently Milliken has followed a related approach by deriving the aerodynamic kernel function for a rectangular panel in steady rectilinear motion using the acoustic method [9]. This result will be presented here as preparation for a more complicated kernel function for propellers.

Following a discussion of the governing equation of acoustics and its relevence to aerodynamics, application to aerodynamic problems will be considered. Two examples will be given, the second being an application to propeller aerodynamics. For the case of the propeller, an analytical treatment of the singularities appearing in the integral equation is given. As a result, only non-singular integrals are required for numerical work.

The Governing Equation

Let $\phi(\vec{x},t)$ and $p(\vec{x},t)$ be the velocity potential and the pressure, respectively. Here the $\vec{x}$-frame is fixed to the undisturbed fluid medium in which the speed of sound is c. The velocity potential in the linearized form satisfies the wave equation

$$\frac{1}{c^2}\frac{\partial^2\phi}{\partial t^2} - \nabla^2\phi \equiv \Box^2\phi=0 \tag{1}$$

The fluid perturbation velocity is $\vec{u}=\nabla\phi$, and the relation between p an ϕ is described by

$$p=-\rho_o\frac{\partial\phi}{\partial t} \tag{2}$$

where ρ_o is the density of undisturbed medium.

Consider a lifting thin body in arbitrary motion. In the following we will omit consideration of the thickness effect. Within linearized theory, boundary conditions on the body are referred to an infinitesimally thin mean chord surface whose velocity is everywhere tangent to itself. Assume that $f(\vec{x},t)=0$ describes this surface in motion such that ∇f points toward the suction side of the lifting body. Let $k(\vec{x},t)=0$ describe the wake of the body, also assumed infinitesimally thin. Across the surface f=0, the jump in surface pressure, $\Delta p=p_{lower}-p_{upper}$, is related to the velocity potential by Eq. (2) as follows

$$\Delta p-\rho_0\Delta\phi_t=0 \tag{3}$$

where $\phi_t=\partial\phi/\partial t$. Across the wake, since $\Delta p=0$, one gets

$$\Delta\phi_t=0 \tag{4}$$

Note that $\Delta\phi_t=(\phi_t)_{upper}-(\phi_t)_{lower}$ in Eqs. (3) and (4).

Following reasoning used in classical aerodynamics, ϕ has a jump across f=0 and k=0. We wish to obtain a wave equation in which this discontinuity is included explicitly in an inhomogeneous source term. To do this we replace the derivatives in Eq. (1) by generalized derivatives[7, 10-12]. The result is

$$\bar{\Box}^2\phi=-\bar{\nabla}\cdot[\Delta\phi\ \nabla f\,\delta(f)]-\bar{\nabla}\cdot[\Delta\phi\ \nabla k\,\delta(k)] \tag{5}$$

where the bar over the operations denotes generalized differentiation and $\delta(\cdot)$ is the Dirac delta function. Here again $\Delta\phi=\phi_{upper}-\phi_{lower}$. Taking the time derivative of both sides of Eq. (5) and using Eqs. (2) to (4), we obtain

$$\bar{\Box}^2 p=\bar{\nabla}\cdot[\Delta p\vec{n}|\nabla f|\,\delta(f)] \tag{6}$$

Here $\vec{n}=\nabla f/|\nabla f|$ is the unit normal to f=0 pointing toward the suction side. Equation (6) is a special case of the Ffowcs Williams-Hawkings (FW-H) equation [7, 10, 13]. It is the governing equation for all acceleration potential (doublet lattice) methods. To relate the above results to those of classical aerodynamics, consult reference 7. The mathematics of this section is discussed in references 10 to 12.

The Acoustic Approach To Aerodynamics

We consider two different methods in this section. The first leads to a rather conventional integral equation. We begin with the formal solution of Eq. (6), which is,

$$4\pi p(\vec{x},t)=\bar{\nabla}\cdot\int\frac{1}{r}\Delta p\vec{n}|\nabla f|\,\delta(f)\,\delta(g)\,d\vec{y}\,d\tau \tag{7}$$

where $g=\tau-t+r/c$, $r=|\vec{r}|=|\vec{x}-\vec{y}|$, and $(\vec{x},t)$ and $(\vec{y},\tau)$ are the observer and source space-time variables, respectively. For aerodynamic application we use one special form of the various equivalent interpretations of Eq. (7) [14]. Taking the divergence term in Eq. (7) inside the integral and using the relation

$$\frac{\partial}{\partial x_i}\left[\frac{\delta(g)}{r}\right]=-\frac{1}{c}\frac{\partial}{\partial t}\left[\frac{\hat{r}_i\,\delta(g)}{r}\right]-\frac{\hat{r}_i\,\delta(g)}{r^2} \tag{8}$$

where $\hat{r}_i=r_i/r$, we get

$$4\pi p(\vec{x},t)=-\frac{1}{c}\frac{\partial}{\partial t}\int\frac{\Delta p\cos\theta}{r}|\nabla f|\,\delta(f)\,\delta(g)\,d\vec{y}\,d\tau - \int\frac{\Delta p\cos\theta}{r^2}|\nabla f|\,\delta(f)\,\delta(g)\,d\vec{y}\,d\tau \tag{9}$$

The interpretation of the integrals in Eq. (9) is given elsewhere [14]. Let Σ be the surface generated by the intersection of f=0 and the collapsing sphere $g=\tau-t+r/c=0$. Since f=0 is assumed to move tangent to itself, $M_n=0$ on the Σ- surface (therefore Λ in reference 14 is equal to 1) and we can write Eq. (9) as follows:

$$4\pi p(x,t)=-\frac{1}{c}\frac{\partial}{\partial t}\int_{F=0}\frac{1}{r}[\Delta p\cos\theta]_{\tau^*}d\Sigma - \int_{F=0}\frac{1}{r^2}[\Delta p\cos\theta]_{\tau^*}d\Sigma \tag{10}$$

where $F(\vec{y};\vec{x},t)=[f(\vec{y},\tau)]_{ret}=f(\vec{y},t-r/c)$ and τ^* is the emission time. One more step is needed to get the required result. Using Eq. (2) on the left side of Eq. (10) and then integrating both sides with respect to the observer time from $-\infty$ to t, we obtain

$$4\pi\rho_0\phi(\vec{x},t)=\frac{1}{c}\int_{F=0}\frac{1}{r}[\Delta p\cos\theta]_{\tau^*}d\Sigma + \int_{-\infty}^{t}\int_{F=0}\frac{1}{r^2}[\Delta p\cos\theta]_{\tau'^*}d\Sigma\,dt' \tag{11}$$

where τ'^* is the emission time corresponding to $(\vec{x},t')$, t' being the integration variable with

respect to observer time. Upon calculating the normal derivative $\partial/\partial n$ of both sides of Eq. (11), we get the aerodynamic integral equation

$$4\pi\rho_0 v_n(\vec{x},t) = \frac{1}{c}\frac{\partial}{\partial n}\int_{F=0}^{-}\frac{1}{r}[\Delta p\cos\theta]_{\tau^*}d\Sigma + \frac{\partial}{\partial n}\int_{-\infty}^{t}\int_{F=0}\frac{1}{r^2}[\Delta p\cos\theta]_{\tau'^*}d\Sigma dt' \tag{12}$$

where v_n is the local normal velocity of the surface. The right side of Eq. (12) must be interpreted as a limit for $\vec{x}$ approaching the surface f=0.

Equation (12) is a linear singular integral equation. It is the basis of the acceleration potential or doublet lattice method. We note, however, that there is no restriction made in Eq. (12) to uniform rectilinear motion of the surface f=0. The aerodynamic kernel is derived from this result and will be discussed later. We mention here that the second integral on the right of Eq. (12) is an improper integral. Thus the normal derivative cannot be taken inside without careful analysis since it leads to a singular integral.

A second method of using acoustic equations in aerodynamics is to treat Eq. (10) itself as an integral equation on the unknown surface pressure as suggested by Long [15] and Farassat [16]. For reasons which will be explained in the next section, this method fails for the steady angle of attack problem. One is thus obliged to use the first method. However, in the case of periodic motion the second method appears to lead to a useful integral equation whose solution is considerably simpler than that of Eq. (12).

Further Analysis and Applicability to Steady and Unsteady Motion

Equation (12) can be used for numerical calculations by dividing the wing or blade surface into panels and approximating the integrals assuming that Δp is uniform on each panel:

$$\begin{aligned}4\pi\rho_0 v_n(\vec{x}_j,t) &= \sum_i \Delta p_i\left\{\frac{1}{c}\frac{\partial}{\partial n}\int_{F_i=0}\frac{1}{r}[\cos\theta]_{\tau^*}d\Sigma + \frac{\partial}{\partial n}\int_{-\infty}^{t}\int_{F_i=0}\frac{1}{r^2}[\cos\theta]_{\tau'^*}d\Sigma dt'\right\}\\ &\equiv 4\pi\rho_0\sum_i\Delta p_i K_{ij}\end{aligned} \tag{13}$$

Here $F_i = F_i(\vec{y};\vec{x}_j,t)=0$ is the surface generated by the intersection of the i-th panel with the collapsing sphere $g=\tau-t+r/c=0$. The function K_{ij} is the aerodynamic kernel function. Physically, it is the normal velocity induced at the j-th panel by the i-th panel.

Under some conditions, the integrals in the kernel function can be evaluated analytically. We present an example in the next section. Quite often, however, one has to resort to numerical integration but treat the singularities in the integrals analytically. In preparation for this step, we carry the analysis of the previous section further. First we note that F_i is a function of n so that essentially Leibniz rule for differention of an integral must be used on the integrals in the kernel function. This can be achieved most efficiently using some elementary generalized function theory.

Let us define the following integral in which $q(\vec{y};\vec{x},t)$ is an arbitrary function and F_i has the same meaning as defined above:

$$I = \frac{\partial}{\partial n}\int_{F_i=0} q\,d\Sigma \tag{14}$$

Note the surface integration is with respect to the variable $\vec{y}$ and the normal derivative is with respect to $\vec{x}$. On the surface f=0, let the ith panel be specified by $f_i=0$, $\ell(\vec{y},\tau)>0$ where $f_i=0$, $\ell=0$ specifies the edge of the panel. Then using $L(\vec{y};\vec{x}_j,t)=\ell(\vec{y},t-\frac{r}{c}), r=|\vec{x}_j-\vec{y}|$, Eq. (14) can be written as

$$I = \frac{\partial}{\partial n}\int H(L)q\,d\Sigma \tag{15}$$

where H(L) is the Heaviside function. The limits of the integrals in Eq. (15) can be considered constants now and the normal derivative can be taken inside as follows:

$$I = \int\frac{\partial L}{\partial n}q\,\delta(L)d\Sigma + \int H(L)\frac{\partial q}{\partial n}d\Sigma \tag{16}$$

We also have, from the definition of L,

$$\frac{\partial L}{\partial n} = -\frac{1}{c}\cos\theta'\frac{\partial\ell}{\partial\tau} \tag{17}$$

in which θ' is the angle between $\vec{n}$ (at the j-th panel) and the unit radiation vector $\hat{\vec{r}}$ (from the i-th panel to the j-th panel).

The first integral in Eq. (16) is a line integral over the edge of the Σ- surface generated by the i-th panel. It can be written in a compact form by first writing Eq. (17) as follows:

$$\frac{\partial L}{\partial n} = M_\nu|\nabla\ell|\cos\theta' \tag{18}$$

where $M_\nu = \vec{M}\cdot\vec{\nu}$ is the local Mach number in the direction of the inward geodesic normal $\vec{\nu}$ to the edge of the panel $f_i=\ell=0$. The geodesic normal $\vec{\nu}$ is defined as the unit vector which is perpendicular to the edge and tangent to the panel $f_i=\ell=0$. Then, let (u^1,u^2) be an arbitrary curvilinear coordinate system on Σ and $g_{(2)}$ be the determinant of the coefficients of the first fundamental form. We have $d\Sigma=\sqrt{g_{(2)}}du^1du^2$. Using the coordinate transformation $u^1\to L$, we have

$$|\nabla L|\sqrt{g_{(2)}}du^1du^2 = \frac{|\nabla L|\sqrt{g_{(2)}}}{|\partial L/\partial u^1|}du^2dL = d\gamma dL \tag{19-a}$$

$$|\nabla L| = |\nabla\ell|\Lambda_0 \tag{19-b}$$

$$\Lambda_0^2 = M_p^2\cos^2\psi + (1-\vec{M}_p\cdot\hat{\vec{r}}_p\sin\psi)^2 \tag{19-c}$$

Here $\vec{M}_p$ is the projection of the local Mach number vector on the plane normal to the edge curve, $M_p=|\vec{M}_p|$ and $\hat{\vec{r}}_p$ is the unit vector along the projection of $\hat{\vec{r}}$ on the plane. Also ψ is the angle between the radiation vector $\hat{\vec{r}}$ and the edge curve

of the Σ- surface. Figure 1 illustrates these geometric quantities. In Eq. (19-a), $d\gamma$ is the element of length of the edge curve of the Σ- surface. Substituting Eq. (18) into the first term of Eq. (16), using Eq. (19) and finally integrating with respect to L gives

$$I=\int_{\substack{F_i^0=0\\ L=0}} qM_\nu \frac{\cos\theta'}{\Lambda_0}\, d\gamma+\int H(L)\frac{\partial q}{\partial n}d\Sigma \tag{20}$$

where we define $F_i^0=[F_i(\vec{y};\vec{x},t)]_{n=0}$.

In general the second term in Eq. (20) is singular for aerodynamic problems. This would happen for Eq. (14) if we assume that the integral in Eq. (14) is an improper integral. Mathematically, $\partial/\partial n$ could not be taken under the integral in the classical sense. However, we can interpret $\partial/\partial n$ as a generalized derivative. Taking the finite part of a divergent integral in many problems of aerodynamics is equivalent to assuming $\partial/\partial n$ is a generalized derivative. We can avoid this route and the associated algebra and computational difficulties by taking $\partial/\partial n$ out of the integral as follows:

$$\int H(L)\frac{\partial q}{\partial n}\, d\Sigma=\frac{\partial}{\partial n}\int[H(L)]_{n=0}q\,d\Sigma=\frac{\partial}{\partial n}\int_{\substack{F_i^0=0\\ L>0}} q\,d\Sigma \tag{21}$$

We thus write Eq. (20) in the form

$$I=\int_{\substack{F_i^0=0\\ L=0}} qM_\nu \frac{\cos\theta'}{\Lambda_0}\, d\gamma + \frac{\partial}{\partial n}\int_{\substack{F_i^0=0\\ L>0}} q\,d\Sigma \tag{22}$$

Note that $L=[L]_{n=0}$ also but we do not have to use a new symbol. In practice, the second integral is evaluated analytically in the region near where singularities exist and the normal derivative is then taken analytically. In the other regions, we simply evaluate $\int\partial q/\partial n\, d\Sigma$ numerically.

Going back to the kernel function K_{ij} defined in Eq. (13), we note that both integrals in K_{ij} are of the type in Eq. (14). However, the first integral is proper (or convergent) while the second is improper. Keeping the comments of the above paragraphs in mind, we use the analysis of Eq. (14) to write the kernel function as

$$\begin{aligned}4\pi\rho_0K_{ij}=&\frac{1}{c}\int_{\substack{F_i^0=0\\ L=0}}\frac{1}{r}\left[\frac{M_\nu\cos\theta'\cos\theta}{\Lambda_0}\right]_{\tau^*}d\gamma\\ &+\frac{1}{c}\int_{\substack{F_i^0=0\\ L>0}}\frac{\partial}{\partial n}\left\{\frac{1}{r}\,[\cos\theta]_{\tau^*}\right\}d\Sigma\\ &+\int_{-\infty}^{t}\int_{\substack{F_i^0=0\\ L=0}}\frac{1}{r^2}\left[\frac{M_\nu\cos\theta'\cos\theta}{\Lambda_0}\right]_{\tau'^*}d\gamma dt'\\ &+\frac{\partial}{\partial n}\int_{-\infty}^{t}\int_{\substack{F_i^0=0\\ L>0}}\frac{1}{r^2}\,[\cos\theta]_{\tau'^*}d\Sigma dt'\end{aligned} \tag{23}$$

Note that the index j is implicit on the right side of Eq. (23) by taking $\vec{x}=\vec{x}_j$ in every term of the integrands. An example of the use of the above equation to find the kernel function for propeller-like motion is given in the next section.

Since our procedure is equivalent to what is usually done in acceleration potential methods [16, 17] it is obvious that it is applicable to both steady and unsteady motion. We mention here that the time integrations in Eq. (23) must, in general, be carried out numerically, which would require excessive computation time. It would be highly desirable if somehow this could be avoided. We study the possibility of removing the time integration next.

As mentioned in the previous section, one may treat Eq. (10) as an integral equation on p. Since we are interested only in the lifting problem, we can assume $p_{upper} = -p_{lower}$, i.e., $\Delta p=2p_{lower}$. Now, it would appear that use of Eq. (10) would be an attractive method because it seems to say that, except for information at the emission time τ^*, the past history of the motion of the body is irrelevant to the determination of the surface pressure. However, $\Delta p(\tau^*)$ in turn depends on Δp at earlier times, and in fact the entire history is required for one to apply Eq. (10). For arbitrary motions of the body, one infers that only the first method leads to a proper integral equation unless it happens that Δp has some sort of symmetry property in time. The most common situations in which this kind of behavior exists are for steady and periodic surface pressure. Below we will show that the second method also breaks down for the case of steady surface pressure due to angle of attack but not for the camber and the unsteady (periodic) cases.

Long [8] and Farassat [15] have taken two different but equivalent expressions of Eq. (10) in which $\partial/\partial t$ is taken inside the first integral analytically, and then have treated the result as an integral equation on p. These integral equations are quite complicated. Here we derive by a direct method from Eq. (10) the thin body approximation of the results of Long and Farassat. First, however, we apply Eq. (22) to the two integrals of Eq. (10) which results in

$$\begin{aligned}4\pi\rho_0v_n(\vec{x},t)=&\frac{1}{c}\int_{\substack{F_i^0=0\\ L=0}}\frac{1}{r}\left[\frac{\Delta pM_\nu\cos\theta'\cos\theta}{\Lambda_0}\right]_{\tau^*}d\gamma\\ &+\frac{1}{c}\int_{\substack{F_i^0=0\\ L>0}}\frac{\partial}{\partial n}\left\{\frac{1}{r}[\Delta p\cos\theta]_{\tau^*}\right\}d\Sigma\\ &+\int_{-\infty}^{t}\int_{\substack{F_i^0=0\\ L=0}}\frac{1}{r^2}\left[\frac{\Delta pM_\nu\cos\theta'\cos\theta}{\Lambda_0}\right]_{\tau'^*}d\gamma dt'\\ &+\frac{\partial}{\partial n}\int_{-\infty}^{t}\int_{\substack{F_i^0=0\\ L>0}}\frac{1}{r^2}[\Delta p\cos\theta]_{\tau'^*}d\Sigma dt'\end{aligned} \tag{24}$$

where now $F^0=[F(\vec{y};\vec{x},t)]_{n=0}$ and $L=[\ell(y,t-\frac{r}{c})]_{n=0}$, $\ell(\vec{y},\tau)=0$ describing the blade planform. Again we have kept $\partial/\partial n$ outside the last integral since this integral is improper.

We now take $\partial/\partial t$ of both sides of Eq. (24). We can write $\partial v_n/\partial t$ in the frame attached to the body as follows:

$$\frac{\partial v_n}{\partial t}=\dot{v}_n-V\frac{\partial v_n}{\partial \sigma} \tag{25}$$

where $\dot{v}_n$ is the rate of change of v_n for an observer fixed on the body, V is the local forward speed (of relative wind) and $\partial/\partial\sigma$ is the directional derivative in the direction of forward speed. Equation (20) then gives

$$\begin{aligned}4\pi\rho_0(\dot{v}_n-V\frac{\partial v_n}{\partial\sigma})&=\frac{1}{c}\frac{\partial}{\partial t}\int_{\substack{F^0\equiv 0\\ L=0}}\frac{1}{r}[\frac{\Delta p M_\nu\cos\theta'\cos\theta}{\Lambda_0}]_{\tau^*}d\gamma\\&+\frac{1}{c}\frac{\partial}{\partial t}\int_{\substack{F^0\equiv 0\\ L>0}}\frac{\partial}{\partial n}\{\frac{1}{r}[\Delta p\cos\theta]_{\tau^*}\}d\Sigma\\&+\int_{\substack{F^0\equiv 0\\ L=0}}\frac{1}{r^2}[\frac{\Delta p M_\nu\cos\theta'\cos\theta}{\Lambda_0}]_{\tau^*}d\gamma\\&+\frac{\partial}{\partial n}\int_{\substack{F^0\equiv 0\\ L>0}}\frac{1}{r^2}[\Delta p\cos\theta]_{\tau^*}d\Sigma\end{aligned} \tag{26}$$

Considering the steady state case first ($\dot{v}_n=0$), we note that $\partial v_n/\partial\sigma=0$ for the angle of attack problem so that the left side of Eq. (26) is zero. We are led to the conclusion that the Δp distribution for this case is an eigenfunction of the integral operator on the right side of Eq. (26) corresponding to the eigenvalue zero. This fact is of little help in finding the pressure distribution. However, the integral equation for the camber problem is well defined and appears useful since $V\partial v_n/\partial\sigma\neq 0$. This fact must be explored further.

For the case of the unsteady periodic loading problem, we can assume both $\dot{v}_n$ and Δp are proportional to exp $(i\omega t)$, where ω is the frequency of oscillation, and once again we have an integral equation which is nondegenerate since $\dot{v}_n\neq 0$. This integral equation is in terms of the unknown complex amplitude of Δp. To the authors' knowledge, this equation has not been used before.

The chief advantage of using Eq. (26) instead of Eq. (12) is that no time integral appears in the former. As a result, Eq. (26) requires much less computer time than Eq. (12) in the case of the camber and unsteady periodic loading problems. We can define a new aerodynamic kernel function based on Eq. (26). This is done by using a unit amplitude oscillation of Δp and finding the induced $\dot{v}_n$ at a given point. The calculation of the integrals in Eq. (26) is very similar to conventional acoustic calculations for rotating blades [14] which are at present in the advanced stage of development. These acoustic codes can be easily modified to obtain the aerodynamic kernel. It appears, therefore, that, from a computational viewpoint, the steady angle of attack problem for a thin wing is more difficult than the camber or the unsteady loading problem. For the angle of attack problem, one is obliged to use Eq. (12); no alternative exists.

Examples of Application

We present two examples here for the steady state case. The first is the determination of the aerodynamic kernel function of a lifting surface in uniform rectilinear motion. This function can be found analytically for a rectangular panel. The second example is for a propeller in uniform axial motion. For this case we treat only the more difficult question of singularities of the kernel function.

A Wing in Uniform Rectilinear Motion

Consider a thin wing which is divided into rectangular panels and is moving parallel to the x_1-axis in uniform rectilinear motion in the x_1x_2-plane. Assume that the dimensions of the panel are 2a and 2b in the chordwise and spanwise directions, respectively. Assume also that in the Cartesian frame fixed to the medium, the center of the panel is at $(y_{1c}, y_{2c}, 0)$. We want to find the velocity induced at the observer position (x_1, x_2, x_3) by a unit pressure distribution on the panel. Both integrals of the kernel function in Eq. (13) can be evaluated analytically since τ^* and τ'^* are explicitly known. Note that $\partial/\partial n=\partial/\partial x_3$ here. The normal derivatives of both integrals can be obtained easily. In this example, no special treatment of the singularity of the second integral is needed since the integral is found in closed form. The algebraic manipulations of this example have been carried out by Milliken [9].

We present the kernel function here. We first define the following symbols:

$$\xi_u=y_{1c}-x_1+a \tag{27-a}$$

$$\xi_\ell=y_{1c}-x_1-a \tag{27-b}$$

$$\eta_u=y_{2c}-x_2+b \tag{27-c}$$

$$\eta_\ell=y_{2c}-x_2-b \tag{27-d}$$

$$\beta=\sqrt{1-M^2} \tag{27-e}$$

where M=V/c and V is the forward speed of the wing. The i-th panel is specified by $(y_{1c}, y_{2c}, 0)$ and the control point j is specified by $(x_1, x_2, 0)$. Then the kernel function is found to be

$$\begin{aligned}K_{ij}=\frac{1}{4\pi\rho_0 V}\{&\frac{4ab}{\eta_u\eta_\ell}\\&+\frac{1}{\eta_u}[\sqrt{\xi_u^2+\beta^2\eta_u^2}-\sqrt{\xi_\ell^2+\beta^2\eta_u^2}]\\&-\frac{1}{\eta_\ell}[\sqrt{\xi_u^2+\beta^2\eta_\ell^2}-\sqrt{\xi_\ell^2+\beta^2\eta_\ell^2}]\\&-\beta\log[\frac{(\beta\eta_u+\sqrt{\xi_u^2+\beta^2\eta_u^2})(\beta\eta_\ell+\sqrt{\xi_\ell^2+\beta^2\eta_\ell^2})}{(\beta\eta_u+\sqrt{\xi_\ell^2+\beta^2\eta_u^2})(\beta\eta_\ell+\sqrt{\xi_u^2+\beta^2\eta_\ell^2})}]\}\end{aligned} \tag{28}$$

where log stands for natural logarithm.

It can be shown that Eq. (28) satisfies the Prandtl-Glauert rule [9]. Figure 2, shows the distribution of the induced velocity in the vicinity of a panel. It is very interesting to note that the induced velocity downstream of the panel is similar to that of a horseshoe vortex, as shown in figure 3. The pressure on a retangular wing of aspect ratio 10 moving at forward Mach number of 0.2 is shown in figure 4. The Galerkin method was used to find this distribution. The mid-span chordwise pressure distribution is compared with the two dimensional incompressible analytic result in this figure. The agreement with the calculated pressure distribution is excellent.

A Propeller in Uniform Axial Motion

The kernel function for a propeller in uniform axial motion can be found from Eq. (23) by an analytic-numerical method. We assume that the observer position (control point) $\vec{x}_j$ never lies on the edge of the Σ-surface of a panel. This means that the control point is never on the edge of a panel, which is a common practice in panel methods. Therefore, the line integrals in Eq. (23) are not singular. We thus concentrate on the question of singularities of the surface integrals only. We mention here that the Σ-surface of a panel can be constructed relatively easily by a numerical method even at transonic and supersonic speeds. This is done routinely in acoustic codes using time domain analysis [18].

To study the behavior of singularities of the surface integrals in Eq. (23) we must first set up a coordinate system and write the surface integrals more explicity. We assume that the propeller blade surface lies on the helicoidal surface generated by the blade pitch change axis (PCA). The propeller is moving forward at uniform speed V along the propeller axis and rotating at constant angular velocity ω. The Σ-surface of any panel on the blade surface lies on this helicoidal surface. Essentially, one can forget about the Σ-surface and ask the following question: What is the nature of singularities of the surface integrals of Eq. (23) when we integrate over the helicoidal surface, and how do we evaluate these integrals? We will answer this question next.

Define an $\vec{\eta}$-frame such that the η_3-axis is along the propeller axis and the η_1-axis is along the PCA at time t=0. The origin of this frame is, therefore, at the intersection of the PCA and the propeller axis. The η_2-axis is defined in such a way that the $\vec{\eta}$-frame is right handed. We first find the equation for the helicoidal surface. Let $s = -\eta_3$ and $\eta = (\eta_1^2+\eta_2^2)^{1/2}$, i.e., distance along the PCA. Since the propeller travels a distance s in s/V seconds, the blade rotates $\omega s/V$ radians in this period. The helicoidal surface is, therefore, described by

$$\vec{\eta}=(\eta\cos\alpha\, s, \eta\sin\alpha\, s, -s) \tag{29}$$

where $\alpha=\omega/V$. This surface is defined by parameters (η, s). Portions of this surface are shown in Fig. 5.

We next define some other geometric quantities on the helicoidal surface. The following vector is normal to the surface

$$\frac{\partial\vec{\eta}}{\partial\eta}\times\frac{\partial\vec{\eta}}{\partial s} = (-\sin\alpha\, s, \cos\alpha\, s, \alpha\eta) \tag{30}$$

Its length is

$$\left|\frac{\partial\vec{\eta}}{\partial\eta}\times\frac{\partial\vec{\eta}}{\partial s}\right| = \sqrt{1+\alpha^2\eta^2} \equiv \frac{1}{\beta(\eta)} \tag{31}$$

The unit normal $\vec{n}$ to the helicoidal surface is, therefore,

$$\vec{n}=\beta(\eta)(-\sin\alpha\, s, \cos\alpha\, s, \alpha\eta) \tag{32}$$

We also have

$$d\Sigma = \left|\frac{\partial\vec{\eta}}{\partial\eta}\times\frac{\partial\vec{\eta}}{\partial s}\right| d\eta ds = \frac{d\eta ds}{\beta(\eta)} \tag{33}$$

Let V_h be the local helical speed of the blade. Then V_h and V are related by the relation

$$V_h = \frac{V}{\beta(\eta)} \tag{34}$$

Therefore, the local angle α_h that the helical velocity makes with the $\eta_1\eta_2$-plane is given by

$$\alpha_h = \tan^{-1}\beta(\eta) \tag{35}$$

Assume now that the observer (or the control point) $\vec{x}_j$ is at the distance n from the helicoidal surface with the surface variables (η_0, s_0). From the above results we have

$$\begin{aligned}\vec{x}_j &= \vec{\eta}(\eta_0, s_o) + n\vec{n}(\eta_0, s)\\ &= (\eta_0\cos\alpha\, s_0 - n\beta_0\sin\alpha\, s_0,\\ &\quad \eta_0\sin\alpha\, s_0 + n\beta_0\cos\alpha\, s_0,\\ &\quad - s_0 + \alpha n\eta_0\beta_0)\end{aligned} \tag{36}$$

where $\beta_0=\beta(\eta_0)$. Assuming that the source point $\vec{y}$ on the Σ-surface of the i-th panel has coordinates (η, s) on the helicoidal surface, we have

$$\begin{aligned}\vec{r} &= \vec{x}_j - \vec{y} = \vec{x}_j - \vec{\eta}(\eta, s)\\ &= (\eta_0\cos\alpha\, s_0 - n\beta_0\sin\alpha\, s_0 - \eta\cos\alpha\, s,\\ &\quad \eta_0\sin\alpha\, s_0 + n\beta_0\cos\alpha\, s_0 - \eta\sin\alpha\, s,\\ &\quad s - s_0 + n\alpha\eta_0\beta_0)\end{aligned} \tag{37-a}$$

$$\begin{aligned}r^2 &= \eta_0^2 + \eta^2 + n^2 + u^2 - 2\eta\eta_0\cos\alpha u\\ &\quad + 2n\eta\beta_0\sin\alpha u - 2\alpha\beta_0\eta_0 nu\end{aligned} \tag{37-b}$$

$$u = s_0 - s \tag{37-c}$$

$$\begin{aligned}\cos\theta &= \frac{\vec{n}\cdot\vec{r}}{r} = \frac{\beta(\eta)}{r}[\eta_0\sin\alpha\, u - \alpha\eta u\\ &\quad + n\beta_o(\cos\alpha\, u + \alpha^2\eta\eta_0)]\end{aligned} \tag{37-d}$$

The two surface integrals of concern here in the kernel function K_{ij} of Eq. (23) are

$$I_1 = \int \frac{\partial}{\partial n}\left[\frac{\cos\theta}{r}\right] d\Sigma \qquad (38\text{-a})$$

$$I_2 = \frac{\partial}{\partial n}\int \frac{\cos\theta}{r^2}\, d\Sigma \qquad (38\text{-b})$$

where $\partial/\partial n$ stands for $\lim_{n\to 0}\partial/\partial n$. We remind readers that integrations are over portions of the helicoidal surface. The upper and lower limits of these integrals in the variables (η,s) are independent of n since the influence of this latter variable is included in the line integrals of Eq. (23). In the following discussions, we use Eqs. (33), (37-b) and (37-d) for $d\Sigma$, r and $\cos\theta$, respectively.

Because we have $\cos\theta$ in the numerator of I_1, we can tolerate r^2 in the denominator of the second term on the right of the following equation:

$$\frac{\partial}{\partial n}\left[\frac{\cos\theta}{r}\right] = \frac{1}{r}\frac{\partial\cos\theta}{\partial n} - \frac{\cos\theta}{r^2}\frac{\partial r}{\partial n} \qquad (39)$$

In fact the second term yields an improper (convergent) integral. A well-known result of potential theory tells us that, if, $\vec{x}_j$ is in the region of integration, then we must isolate a small region around $\vec{x}_j$ and integrate analytically the second term over this small region. The result is $2\pi[\partial r/\partial n]_{\vec{x}_j}$. Integration over other regions then must be carried out separately. It is interesting to note that the integration with respect to η can be performed analytically, and only the integration over s must be evaluated numerically. Our work with I_1 is thus finished.

For I_2 we must proceed more cautiously. We note that $r\to 0$ as $(\eta,s)\to(\eta_0,s_0)$. We first integrate the integral with respect to η analytically. Then we take $\partial/\partial n$ inside the integral and study the convergence of the resulting integrals We find that integrals are convergent except near the control point $\vec{x}_j$. For this small region, we again keep $\partial/\partial n$ outside the integrals which involve now only integration with respect to the variable s. Using Taylor series expansion of the integrands in $u=s-s_0$, the integrals are evaluated analytically and then $\partial/\partial n$ is calculated. The result is no longer singular as $n\to 0$. The algebraic manipulations are very lengthly and tedious but straightforward. Here we have given the important equations and the crucial steps for finding the kernel function for a propeller.

Now we summarize the procedures for obtaining the kernel function K_{ij}. The first two integrals in Eq. (23) are evaluated only once for each $\vec{x}_j$ at the time t. We take this time as t=0 since Δp is independent of time. The steps for the first two integrals are as follows:

i) Construct the Σ-surface of the i-th panel numerically for t=0.

ii) Perform the line integral over the edge of the Σ-surface numerically.

iii) With the surface integral written as in Eq. (38-a), check to see if $\vec{x}_j$ is on the Σ-surface. If so, isolate $\vec{x}_j$ by a small region and integrate analytically. This gives a single finite term. For the remainder of the Σ-surface, integrate the surface integral analytically with respect to η and numerically with respect to s. If $\vec{x}_j$ is not on the Σ-surface, repeat the above analytic (wrt η) - numerical (wrt s) integration for the surface integral.

For the last two integrals of Eq. (23), we have a time integration over t' from $-\infty$ to 0. We discretize the time integration. For each $t'_k<0$, we perform the following steps:

i) and (ii) as above for the first two integrals.

iii) write the surface integral as in Eq. (38-b). Integrate analytically with respect to η. If $\vec{x}_j$ is on the Σ-surface, isolate $\vec{x}_j$ by a small region and integrate analytically with respect to s. Take $\partial/\partial n$ analytically. For the remainder of the Σ-surface, take $\partial/\partial n$ inside and integrate numerically with respect to s. If $\vec{x}_j$ is not on the Σ-surface, take $\partial/\partial n$ inside the integral and integrate numerically with respect to s.

iv) Repeat the above three steps for the next t'_k and finally integrate numerically both the line and surface integrals with respect to t'. We mention here that when $t'<<0$, we can simplify the integrands considerably and thus evaluate the line and surface integrals more efficiently.

Concluding Remarks

In this paper, we have developed the theoretical foundations necessary to solve for the aerodynamic loading on thin lifting bodies in arbitrary motion. We treat the problem from an acoustic viewpoint in a frame of reference fixed in the undisturbed medium, and we exploit the fact that the pressure satisfies the wave equation in this reference frame. Generalized function theory is applied to obtain an inhomogeneous wave equation in which the boundary conditions on the moving body are explicitly included as source terms. This equation is then solved formally using the free space Green's function for the wave operator. We use the formal solution for the observer located on the body surface to derive two linear singular integral equations which are satisfied by the surface pressure. One of these is completely general, but we find that the second (simpler) one is a proper integral equation only in certain special cases. Among these are the steady problem for loading due to camber and the unsteady periodic loading problem.

Two examples of the use of the theory as the basis of a numerical panel method are discussed. The first is a wing in steady rectilinear motion. In this case, detailed numerical results obtained elsewhere [9] are found to compare well with the predictions of alternate analyses. The second example involves a propeller in uniform axial motion. Here we concentrate on an analytical discussion of the behavior of the aerodynamic kernel. We find that it is possible to eliminate all singular integrals which occur, so that the current method promises to lead to an extremely efficient numerical scheme. Actual numerical implementation of the theory to the propeller problem is currently in progress.

The theory presented here has several advantages in comparison to more conventional discussions of aerodynamics. First, of course, is the

fact that it is applicable to arbitrary unsteady motions of the body so long as they are within the realm of linearized theory. Because it is carried out completely in the time domain, there is no necessity for a Fourier Transform approach with its attendant complications of infinite series of special functions. Even in the case of steady rectilinear motion, however, the current approach yields results in a manner which many will find easier to understand than the usual development of aerodynamic theory. In particular, the acoustic approach involves the direct solution of a well-defined boundary value problem with no a priori modeling of the flow field by distributions of singularities.

References

1. Johnson, W., "Recent Developments in Rotary Wing Aerodynamic Theory," to appear in AIAA Journal.

2. Ashley, H. and Landahl, M, Aerodynamics of Wings and Bodies, Addison-Wesley, 1965.

3. Garrick, I. E., "Nonsteady Wing Characteristics," Section F of High Speed Aerodynamics and Jet Propulsion, ed. A. F. Donovan and H. R. Lawrence, Princeton University Press, 1957.

4. Kondo, K., "On the Potential-Theoretical Fundamentals of the Aerodynamics of Screw Propellers at High Speed," Journal of the Faculty of Engineering, University of Tokyo, Vol. 25, 1957.

5. Hanson, D. B., "Compressible Helicoidal Surface Theory for Propeller Aerodynamics and Noise," AIAA Journal, Vol. 21, June, 1983, pp. 881-89.

6. Das, A., "Wave Propagation from Moving Singularities and a Unified Exposition of the Linearized Theory for Aerodynamics and Acoustics," DFVLR FB 84-17, 1984.

7. Farassat, F., "Advanced Theoretical Treatment of Propeller Noise," von Karman Institute Lecture Series 81-82/10, Brussels, May 24-28, 1982.

8. Long, L., "The Compressible Aerodynamics of Rotating Blades Based on an Acoustic Formulation," NASA TP-2197, December 1983.

9. Milliken, R., "A New Lifcing Surface Method: An Acoustic Approach," M. S. Thesis, The George Washington University, 1986.

10. Farassat, F., "Discontinuities in Aerodynamics and Aeroacoustics: The Concept and Applications of Generalized Derivatives," Journal of Sound and Vibration, Vol. 55, No. 2, 1977, pp. 165-193.

11. Gel'fand, I. M. and Shilov, G. E., Generalized Functions (Vol. 1) Properties and Operations, Academic Press, 1964.

12. Kanwal, R. P., Generalized Functions - Theory and Technique, Academic Press, 1983.

13. Ffowcs Williams, J. E. and Hawkings, D. L., "Sound Generation by Turbulence and Surfaces in Arbitrary Motion," Phil. Trans. Roy. Soc., London, A264, 1969, pp. 321-342.

14. Farassat, F., "Linear Acoustic Formulas for Calculation of Rotating Blade Noise," AIAA Journal, Vol. 19, No. 9, 1981, pp. 1122-1130.

15. Farassat, F., "A New Aerodynamic Integral Equation Based on an Acoustic Formula in the Time Domain," Technical Note, AIAA Journal, Vol. 22, No. 9, September, 1984, pp. 1137-1340.

16. Landahl, M. T. and Stark, V. J. E., "Numerical Lifting-Surface Theory - Problems and Progress," AIAA Journal, Vol. 6, November, 1968, pp. 2049-2060.

17. Albano, E. and Rodden, W. P., "A Doublet--Lattice Method for Calculating Lift Distributions on Oscillating Surfaces in Subsonic Flows," AIAA Journal, Vol. 7, February, 1969, pp. 279-285.

18. Nystrom, P. A. and Farassat, F., "A Numerical Technique for Calculation of the Noise of High-Speed Propellers with Advanced Blade Geometry," NASA TP-1662, 1980.

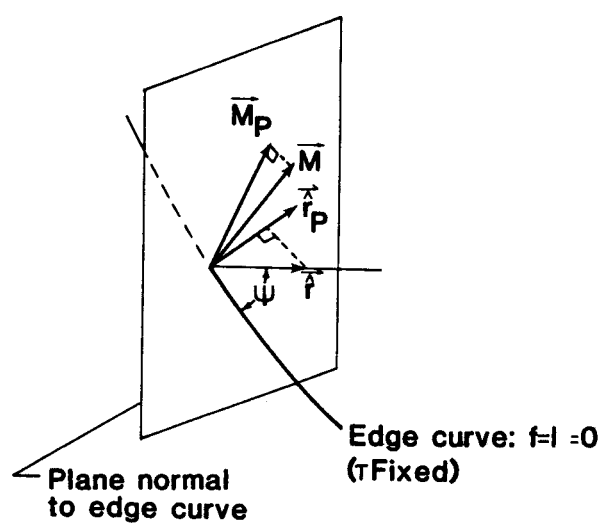

Figure 1. Geometry of edge curve of the panel and local plane normal to it.

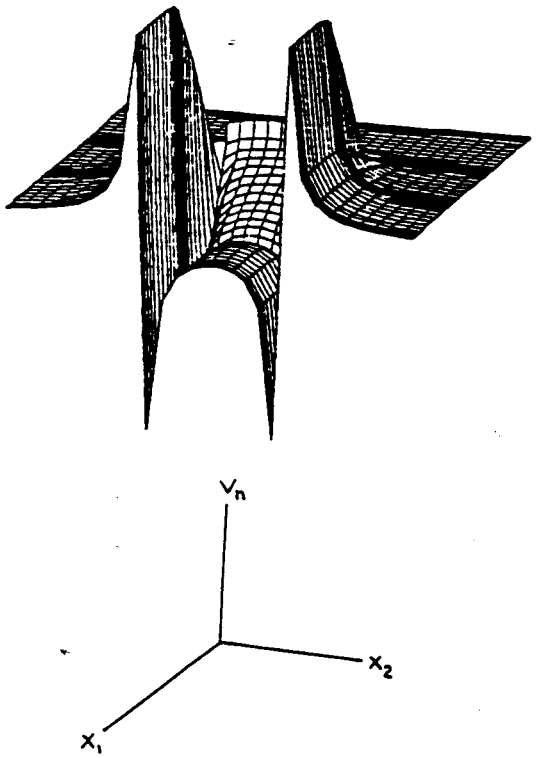

Figure 2. Induced velocity near panel.

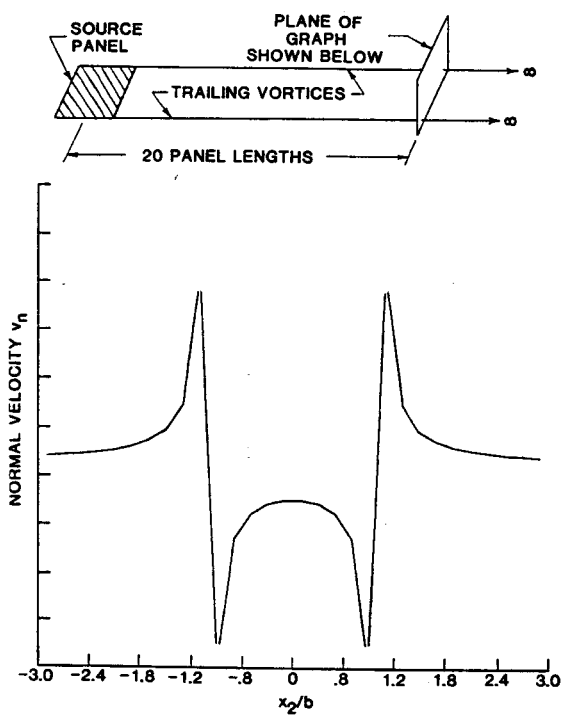

Figure 3. Induced velocity far downstream of panel.

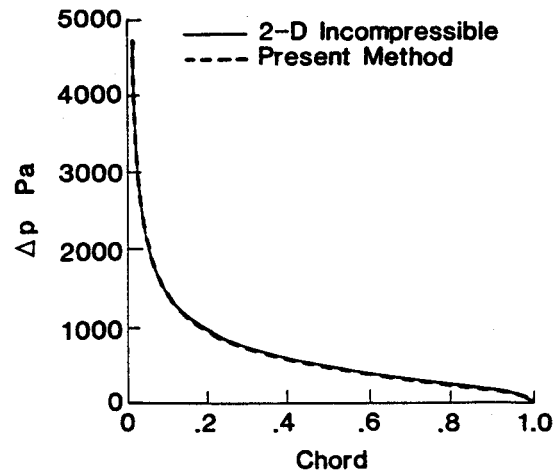

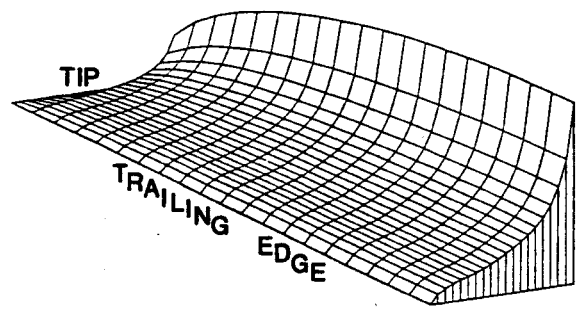

SEMI-SPAN PRESSURE DISTRIBUTION

Figure 4. Pressure distribution on flat plate: AR=10,M=0.2, Angle of attack=0.05 rad.

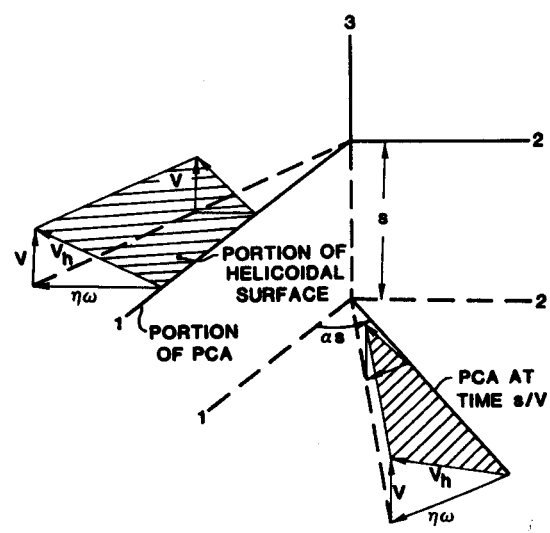

Figure 5. Geometry of helicoidal surface.