TECHNOLOGY REQUIREMENTS FOR AFFORDABLE SINGLE-STAGE ROCKET LAUNCH VEHICLES

Douglas O. Stanley* and William M. Piland**
NASA Langley Research Center
Hampton, Virginia 23681-0001 USA

Abstract

A number of manned Earth-to-orbit (ETO) vehicle options for replacing or complementing the current Space Transportation System are being examined under the Advanced Manned Launch System (AMLS) study. The introduction of a reusable single-stage vehicle (SSV) into the U.S. launch vehicle fleet early in the next century could greatly reduce ETO launch costs. As a part of the AMLS study, the conceptual design of an SSV using a wide variety of enhancing technologies has recently been completed and is described in this paper. This paper also identifies the major enabling and enhancing technologies for a reusable rocket-powered SSV and provides examples of the mission payoff potential of a variety of important technologies. This paper also discusses the impact of technology advancements on vehicle margins, complexity, and risk, all of which influence the total system cost.

Nomenclature

ACC	advanced carbon-carbon
Al	aluminum
Al-Li	aluminum-lithium
AMLS	Advanced Manned Launch System
APAS	Aerodynamic Preliminary Analysis System
BITE	built-in test equipment
c.g.	center of gravity, percent of body length
CFD	computational fluid dynamics
CONSIZ	Configuration Sizing program
ETO	Earth to orbit
FRSI	fibrous reusable surface insulation
g	acceleration of gravity (32.2 ft/sec^2)
GPS	global positioning satellite
Gr/Ep	graphite/epoxy
INS	inertial navigation system
KSC	Kennedy Space Center
LH_2	liquid hydrogen (at 4.43 lb/ft^3)
LO_2	liquid oxygen (at 71.2 lb/ft^3)
LRU	line-replaceable unit
MDO	multidisciplinary design optimization
NASP	National Aero-Space Plane
OMS	orbital maneuvering system
POST	Program to Optimize Simulated Trajectories
RCS	reaction control system
RSI	reusable surface insulation
RTV	room-temperature vulcanized
SMART	Solid Modeling Aerospace Research Tool
SSME	Space Shuttle Main Engine
SSV	single-stage vehicle
T/W	thrust/weight
TABI	tailorable advanced blanket insulation
TBP	triple-boiling point
Ti-AMMC	titanium advanced metal-matrix composite
TPS	thermal protection system
VHM	vehicle health management
ΔV	incremental velocity, ft/sec

Introduction

A number of manned Earth-to-orbit (ETO) vehicle options for replacing or complementing the current Space Transportation System are being examined under the Advanced Manned Launch System (AMLS) study.[1-3] The range of schedule and technology options examined include a wide variety of vehicle types and propulsion systems. These include single-stage and two-stage systems, systems utilizing rocket and airbreathing propulsion, systems for personnel and/or cargo transportation, and systems with varying degrees of reusability.[4-6] The AMLS effort is part of a larger U.S. study to define systems that meet future mission requirements of transporting personnel and payloads requiring a manned presence, while emphasizing improved cost-effectiveness, increased vehicle reliability, and large operational margins. The goals of the AMLS study are to conceptually design and analyze systems that provide routine, low-cost manned access to space. Technologies and system approaches are being studied that should contribute to significant reductions in life cycle costs relative to current systems.[7] The single-stage vehicle presented in this paper would be expected to have a 2008-2010 initial operating capability in order to replace an aging Shuttle fleet. Hence, a 1998-2000 technology readiness date was assumed, and moderate technology advancements in

*Aerospace Engineer, Space Systems Division.
**Chief, Space Systems Division.

This paper is declared a work of the U.S. Government and is not subject to copyright protection in the United States.

vehicle structure, propulsion, and subsystems were utilized. Although many of these technological advancements contribute to significant weight savings in the vehicle, a portion of this weight savings has been applied to aspects of vehicle design that enhance the operations, reliability, and safety factors in order to provide a more affordable system.

The introduction of a reusable single-stage vehicle (SSV) into the U.S. launch vehicle fleet early in the next century could greatly reduce ETO launch costs. Currently, the AMLS study is concentrating on the design and evaluation of winged, rocket-powered, single-stage vehicles to transport 20 to 25 klb of payload and 2 to 6 crew to and from an international space station. Such an SSV would eliminate the need to develop, produce, and operate two dissimilar vehicles as required by two-stage systems. The conceptual design of an SSV using a wide variety of enabling technologies has recently been completed.[8] This paper identifies the major enabling and enhancing technologies for a reusable rocket-powered SSV, provides examples of the mission payoff potential of a variety of important technologies, and discusses the impact of technology advancements on vehicle margins, complexity, and risk, all of which influence the total system cost.

Analysis Methods

The conceptual design of next-generation launch systems requires proper consideration of the integrated effects of trajectory, weights/sizing, geometry, aerodynamics, and aeroheating. All of the trajectory analysis for the single-stage vehicle was performed using the three-degree-of-freedom Program to Optimize Simulated Trajectories (POST). POST is a generalized point mass, discrete parameter targeting and optimization program which allows the user to target and optimize point mass trajectories for a powered or unpowered vehicle near an arbitrary rotating, oblate planet.[9] The weights and sizing analysis was performed using the Configuration Sizing (CONSIZ) program. CONSIZ provides the capability of sizing and estimating weights for a variety of aerospace vehicles using mass-estimating relations based on historical regression, finite element analysis, and technology level. All of the geometry and subsystem packaging of the SSV was performed using the Solid Modeling Aerospace Research Tool (SMART) geometry package. SMART is a menu-driven interactive computer program which provides three-dimensional Bezier surface representations of aerospace vehicles for use in aerodynamic and structural analysis.[10] The Aerodynamic Preliminary Analysis System (APAS) was used to determine vehicle aerodynamics. In the subsonic and low supersonic speed regimes, APAS utilizes a combination of slender body theory, viscous and wave drag empirical techniques, and source and vortex panel distributions to estimate the vehicle aerodynamics. At high supersonic and hypersonic speeds, a non-interference finite element model of the vehicle is analyzed using empirical impact pressure methods and approximate boundary layer methods.[11] An aeroheating analysis of the SSV was also performed using the Miniver aeroheating package. Miniver uses a laminar Blasius skin-friction solution and a turbulent Schultz-Grunow skin-friction method which employs the Eckert reference enthalpy method, and a Fay-Riddell method for stagnation-point analysis.[12] Figure 1 demonstrates the iterative process required between these various disciplines to obtain a vehicle point design.

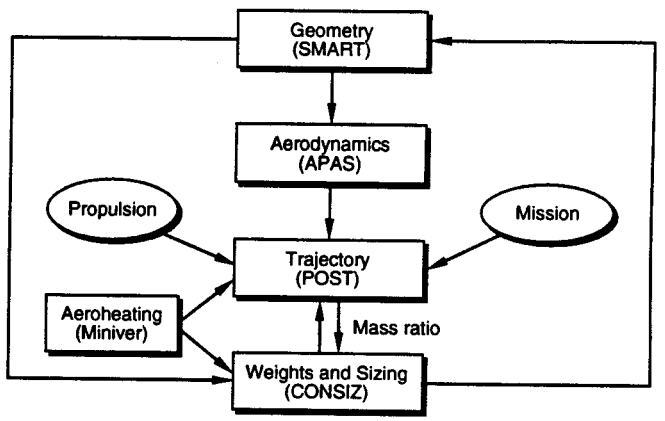

Figure 1. AMLS vehicle design process.

Vehicle Concept

Mission and Guidelines

The design reference mission for the single-stage vehicle is the delivery and return of a 20-klb payload and two crew to an international space station. It would be launched from the Eastern Test Range at the Kennedy Space Center (KSC). The vehicle, shown in Fig. 2, is conceptually designed to support 2 crew for a 5-day mission duration. Four additional personnel and consumables could be accommodated in a space station crew rotation module located in the upper portion of the payload bay (not shown). The vehicle is designed to be flown with crew only when necessary and could be flown in an unmanned mode. The payload bay is 15 ft in diameter and 30 ft long. Onboard propellant would provide an incremental velocity (ΔV) of 1100 ft/sec following launch insertion into a 50 by 100-nmi orbit. Landing would nominally be at the KSC launch site. Examinations of recent mission models of future ETO transportation requirements indicate that a vehicle with these capabilities can capture a very large portion of future civil, military, and commercial payloads.[13-15]

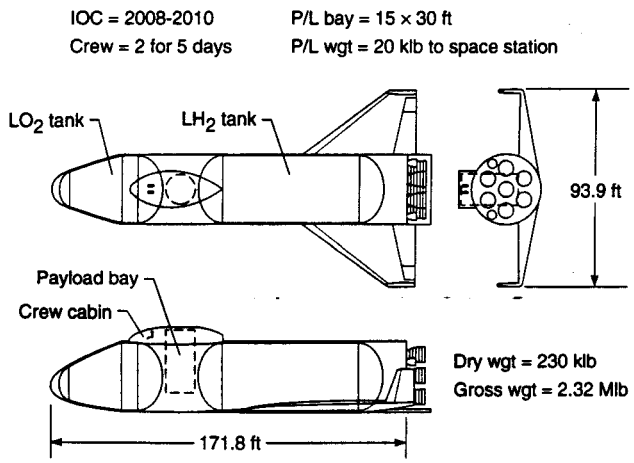

Figure 2. Reference SSV configuration.

The SSV was designed to have a 1100-nmi crossrange capability to allow once-around abort for launch to a polar orbit, if necessary, and to increase daily landing opportunities to selected landing sites. The SSV is also required to have a full range of intact abort opportunities in the event of a forced shutdown of a single main engine.[16] The vehicle has return-to-launch-site, abort-to-orbit, and abort-once-around capabilities. Downrange abort sites could also be reached, but are not required. Crew and passenger escape is provided by ejection seats in the appropriate portions of the flight regime. All vehicle trajectories have maximum acceleration limits of 3 g and normal load constraints equivalent to a 2.5-g subsonic pull-up maneuver. In the design of the SSV, a 15-percent dry weight growth margin was allocated.

Baseline Vehicle Configuration

The reference vehicle, which resulted from the configuration optimization process described in Ref. 8, is a vertical-take-off, horizontal-landing winged concept with a circular-cross-section fuselage for structural efficiency. As shown in Fig. 2, the payload bay is located between an aft liquid hydrogen (LH_2) tank and a forward liquid oxygen (LO_2) tank and is oriented in a vertical position to facilitate vehicle packaging and reduce vehicle structural weight. The normal-boiling-point LH_2 and LO2 propellants are contained in integral, reusable cryogenic tanks. The vehicle employs wing tip fins for directional control rather than a single vertical tail.[17] The crew cabin is located on top of the vehicle. An airlock/workstation located aft of the crew cabin provides crew access to the payload bay and to the space station through a hatch on top. The vehicle employs a standardized payload canister concept with common interfaces to allow off-line processing of payloads and rapid payload integration. The lift-off thrust-to-weight ratio (T/W) of the SSV is 1.22. As shown in the figure, the total vehicle dry weight is 241,000 lb, and the gross weight is 2,440,000 lb. Propulsion, structure, thermal protection system (TPS), and subsystem technologies, described below, that could be developed over the next five years are utilized for an initial operating capability in the 2008-2010 time-frame.

Technology Benefits

To enable the design of an affordable single-stage vehicle (SSV), technologies and system design approaches must be utilized that decrease the operational complexity and empty weight of the vehicle, as shown in Fig. 3. Reductions in SSV empty weight and size have the potential to decrease vehicle development and production costs to some degree; however, the greatest benefit in reducing empty weight for an SSV occurs when the reduction in empty weight is traded for increased vehicle design margins. Increased vehicle margins can contribute to higher system reliability, lower attrition rates, improved crew safety, and decreased development and operational risk, thereby leading to a more affordable system. Large vehicle margins will enable one-time flight vehicle certification similar to that of a commercial aircraft. The SSV would initially be flight-certified for a range of operating conditions, including types of payloads, center-of-gravity (c.g.) location, target orbits, and flight environments. Nominal mission flight loads would then be kept well below vehicle structural and thermal limit loads. Improvements in operability and margins over current systems are important to achieve an affordable SSV; however, the design of a reasonably sized SSV for future mission requirements will also require unprecedented levels of performance in vehicle propulsion systems, structures, thermal protection, and subsystems. These goals of high performance and improved operability are often in opposition. The key to achieving both is the availability of high-payoff technologies prior to SSV development. A portion of

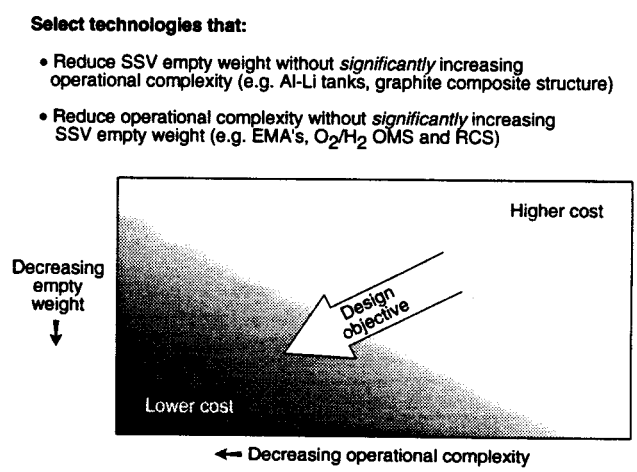

Figure 3. Technology selection process.

these technology benefits will be used to provide sufficient performance to enable the design of a reasonably sized SSV with reduced sensitivity to weight growth. The remaining portion would be utilized to provide large vehicle design margins and reduced operational complexity.

Moderate technology advances can result in an SSV with structural and subsystem weight reductions of 20 percent below that of the current Space Shuttle. As indicated in Fig. 4, a reasonably sized SSV would be very difficult to achieve for the design mission requirements using Space Shuttle technologies. Technology improvements to the level of those assumed for the reference SSV are required to enable the design of an SSV that is light enough to be relatively insensitive to changes in average engine specific impulse during the ascent trajectory. More advanced technologies would enable the design of an SSV that is even less sensitive to changes in engine performance parameters. Fig. 5 shows the cumulative effect of employing a number of moderate technology advancements over STS technologies. These technologies are grouped by major categories and are described in more detail below. As shown in Fig. 6, additional technology advances, which are described below, over those assumed for the reference SSV could enhance the design of a light-weight, high-performing SSV if they are available prior to vehicle development. These technology advancements could be traded for increased vehicle design margins. This principle is further illustrated in Fig. 7. This figure shows the effect of weight growth margin on the reference SSV using an SSME-derivative and a dual-fuel propulsion system. Currently, a 15-percent dry weight margin is assumed for all vehicle components to account for weight growth during a development program. As additional enhancing technologies are employed on the SSV, like a dual-fuel propulsion system, Fig. 7 indicates that the sensitivity to weight growth margin is reduced. Hence, more advanced technologies could be traded for additional weight growth margin to reduce development risk and potential cost escala-

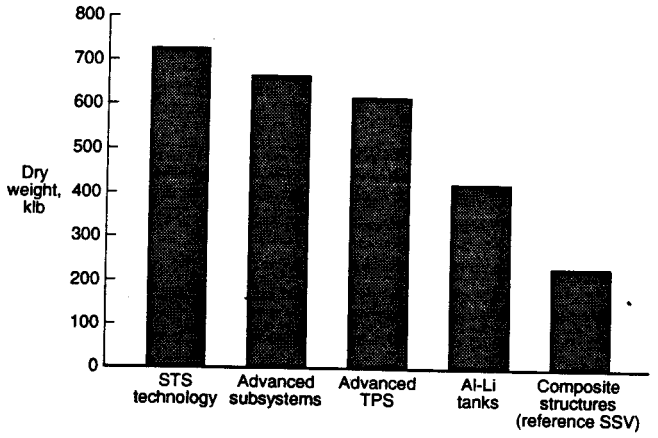

Figure 5. Cumulative effect of technology evolution from STS.

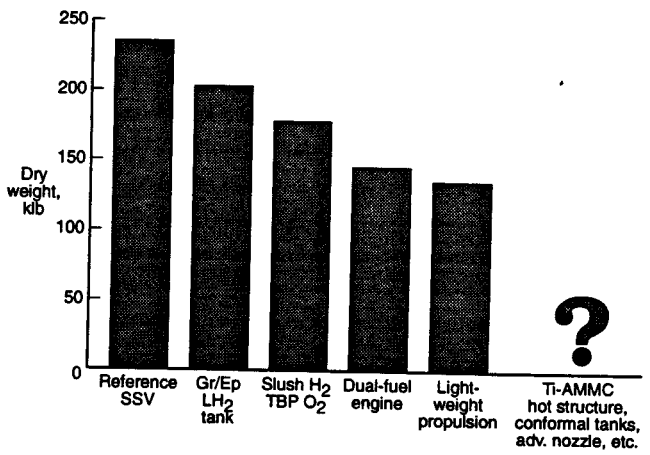

Figure 6. Cumulative effect of enhancing technologies on SSV.

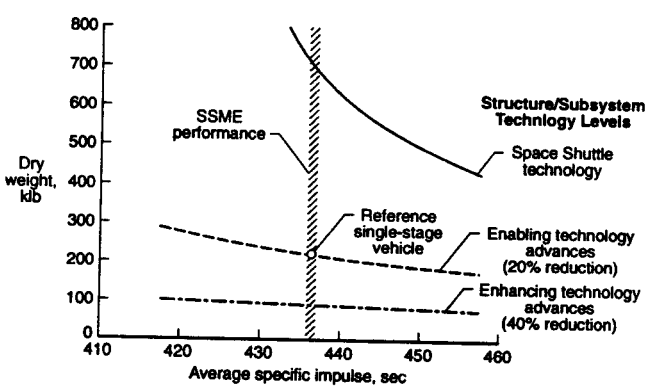

Figure 4. Technology effects on SSV design.

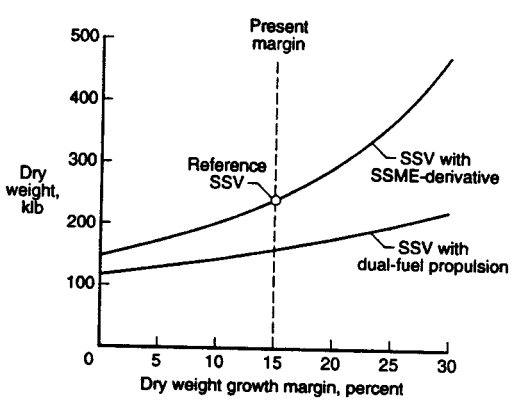

Figure 7. Sensitivity of SSV to dry weight growth margin.

tion. If a vehicle development program is begun with insufficient growth margin, the vehicle design will tend to be driven by mission performance considerations, and technologies that contribute to streamlined operational procedure will often be sacrificed to meet weight and cost constraints.

Technology Development Requirements

In defining a technology development plan for an affordable SSV, recent system studies and technology efforts within the National Aeronautics and Space Administration, the Department of Defense, and the major U.S. aerospace companies were examined and a database of technologies was assembled. The technology readiness level of each of the applicable technologies was assessed according to the scale in Fig. 8. The technology requirements for an affordable SSV were determined and are summarized below. The major enabling SSV technologies and their current readiness level are listed in Table 1. A technology development plan was then derived to advance all major technologies to level 6 or higher prior to beginning full-scale prototype or vehicle development. Test requirements, schedules, and cost were also determined.

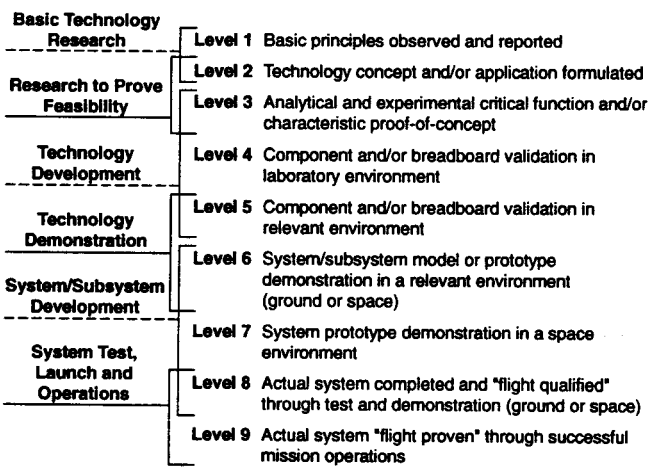

Figure 8. NASA technology readiness levels.

Structures and Materials

The current state-of-the-art primary structural material for aerospace vehicles is aluminum, although high-strength, lightweight materials like aluminum-lithium (Al-Li) alloys and graphite composites are becoming more widely used in the aerospace industry. Aluminum-lithium alloys have the potential to reduce the weight of launch vehicle structures 10-15 percent below conventional aluminum; whereas, graphite composites offer the potential for 15-40 percent reductions, depending on the application. As shown in Fig. 5, the use of Al-Li and graphite composites are essential to enable the design of a reasonably sized SSV. Aluminum-lithium 2095 was selected for use on portions of the reference SSV because it is weldable and has good strength-to-weight and fracture mechanical properties over the required range of temperatures.[18,19] Graphite/epoxy (Gr/Ep) is the most technically mature of the candidate composite materials and has relatively attractive material costs; however, its maximum temperature capability is rather low (250-350°F).[20] Higher temperature (450-600°F) graphite composites, such as graphite/polyimides and graphite/bismaelimides, can reduce the insulation requirements of future SSV thermal protection systems; however, they require a higher degree of technology investment than graphite/epoxy materials.[20] Some additional technology demonstrations of all of these materials using large-scale structures must be performed before full-scale development of an SSV is undertaken. Such large-scale tests would examine advanced fabrication techniques, cycle testing in a full-mission-loads environment, and demonstration of inspection and repair methods.

The current state-of-the-art for a hot structure SSV design would require the use of heavy superalloys and titanium. The elimination of a separate thermal protection system by use of a hot structure could greatly reduce operation and support requirements for reusable launch vehicles; however, current material technologies would not be suitable to achieve the required mass fraction and large weight margins needed to assure the design of an affordable SSV. The use of high-strength-to-weight titanium advanced metal-matrix composites (Ti-AMMC) could provide a light-weight hot structure SSV design; however, the maximum temperature capability of these materials would need to be in the 1800-2000°F range to serve as an acreage TPS for SSV applications. The beta titanium-aluminide metal-matrix composites currently under development by the National Aero-Space Plane (NASP) program appear to have a maximum reuse temperature in the 1250-1500°F range.[21] Some promising high-temperature Ti-AMMC materials exist and could greatly enhance the performance and operability of an SSV; however, they remain in the laboratory research phase.[22]

The major material and structural technologies assumed for the reference single-stage vehicle are summarized in Fig. 9. The SSV employs graphite composite wings, intertank, nose region, fairings, and aft skirt which all act as carrier panels for a ceramic blanket TPS on most windward and leeward surfaces and for an advanced carbon-carbon (ACC) TPS on the vehicle nose and leading edges. All aerodynamic control surfaces are of an ACC hot structure design. The integral hydrogen and oxygen tanks are constructed of Al-Li 2095 and utilize external, closed-cell foam insulation. The thrust structure also utilizes

Table 1. SSV Enabling and Enhancing Technologies.

Subsystem	SSV Enabling Technology (Readiness Level)	SSV Enhancing Technology (Readiness Level)
Fuselage, wings, and carry-through structure	Graphite composite, honeycomb with frames (5)	Gamma or alpha-2 Ti-AMMC (2) Beta 21-S Ti-MMC (4)
Main propellant tanks	Reusable, Al-Li, skin-stringer with frames (3)	Reusable, graphite composite (3) Low-pressure, conformal tanks (3)
Thrust structure	Graphite composite, Al-Li, conical (5)	Beta 21-S Ti-MMC (4)
Aerodynamic surfaces, nose and wing leading edges	ACC hot structure (4)	Carbon/silcon carbide hot structure (3)
Crew cabin	Al-Li, skin stringer with frames (4)	Graphite composite (3) Solid-state radiator (2)
Cryogenic insulation	Reusable, external closed-cell, bonded (4)	Encapsulated multi-layer insulation (3)
Acreage TPS	TABI, AFRSI, bonded (4)	Gamma or alpha-2 Ti-AMMC (2)
Main engine	SSME-derivative (4)	Dual-fuel propulsion (3) Altitude compensating nozzle (4) Advanced materials (3) Advanced H2/O2 cycles (3) Slush propellants (3) Composite feed lines (3)
Aerosurface actuation	EMA (5)	
Main engine actuation	EMA (4)	
OMS/RCS propulsion	Integrated H_2/O_2 (4)	
Prime power	High-power density fuel cells, 270VDC/80kW (4)	High-power density batteries (2)
Electrical conversion and distribution	Fiberoptics, 270VDC/20kHz (4)	
Avionics	Fiberoptics, flat panel displays, GPS receivers/antennas, heads-up display, ring laser gyros, advanced microprocessors, smart sensors, INS, IFMU/IHM (5)	Expert systems, fuzzy logic, artificial intelligence (2) Virtual cockpit (2)
Ground operations	BITE, LRU, standardized payload canisters, leak-free joints and seals, multiple gas leak detection, automated umbilicals, improved disconnects, non-pyro release mechanisms (3)	Smart structures (2) Advanced non-destructive evaluation techniques (2)
Flight operations	IHM, adaptive guidance, automated software generation/validation, automated mission planning, automated rendevous and docking, paperless data management, fault-tolerant architectures (3)	Autonomous vehicle operation (2)

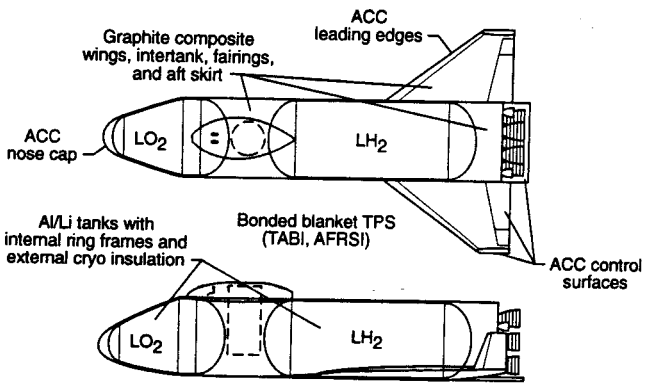

Figure 9. Reference SSV materials.

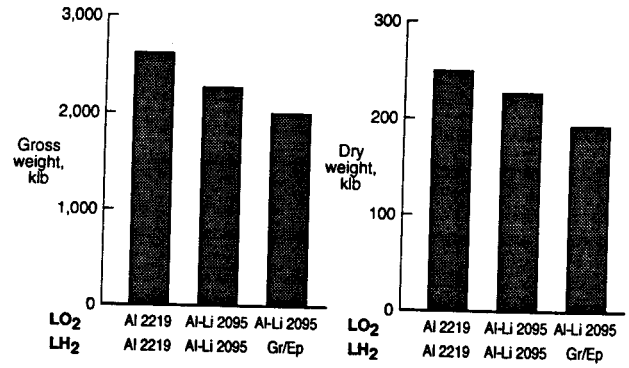

Figure 10. Cryogenic tank material influence on SSV weight.

Al-Li 2095 and graphite composite elements. All fuselage and cryogenic tank structures utilize internal ring frames and stiffeners. A detailed structural analysis of the SSV has been completed using a finite-element analysis methodology similar to that described in Ref. 23. Figs. 4, 5, and 6 shows the effect of employing a number of material technologies on the SSV. As indicated in Figs. 4 and 5, an SSV would be very difficult to achieve for future mission requirements using Space Shuttle technologies. Technology improvements to the level of those assumed for the reference SSV are required to enable the design of an SSV that is light enough to be relatively insensitive to performance variations and weight growth. Additional technology improvements would permit the design of an SSV that is even less sensitive.

Reusable Cryogenic Propellant Tanks

Light-weight, reusable cryogenic propellant tanks are critical to the design of an affordable SSV. The current state-of-the-art cryogenic tank structural material for aerospace vehicles is aluminum (Al), All current flight-weight cryogenic propellant tanks are expendable. Hence, little experience base exists in the certification, inspection, and maintenance of reusable, flight-weight tanks in the operational pressure range of an SSV. If SSV propellant tanks utilize similar pressures to those of the External Tank of the current Space Transportation System (STS), the use of Al-Li 2095 could reduce the weight of the main propellant tanks 10-15 percent below those designed with Al 2219. More advanced graphite composite hydrogen tanks under study by the NASP program offer the potential for even larger weight reductions; however, considerable testing would be required to determine the suitability of graphite composites for LH_2 containment at the operational pressures of an SSV and to determine methods for inspection, maintenance and repair. Figure 10 shows the effect of employing Al, Al-Li, and Gr/Ep propellant tanks on the SSV.

As indicated in Fig. 9, the reference SSV utilizes integral Al-Li main propellant tanks with circular cross sections for structural efficiency. The use of aluminum tanks or non-integral tanks would make it difficult to achieve the ambitious mass fraction and large weight margins required for the design for an affordable SSV design. A graphite composite LH_2 tank, however, could provide an important enhancing technology for an SSV design and should be investigated fully.

A successful reusable cryogenic tank technology program is essential to enable an SSV development. Such a program would include fabrication and testing of material coupons, small-scale pressurized test articles, and large-scale pressurized test articles. Numerous thermal cycle tests should be performed under a full-mission-loads environment with LH_2 and LO_2. The cycling and loading simulation should simulate the high-cycle and low-cycle fatigue characteristics of the operational system. Such simulation would allow the investigation of the porosity and embrittlement characteristics of a reusable LH_2 tank. An extensive failure modes determination should also be performed that would include eventual testing of the cryogenic pressure vessels beyond ultimate load and increasing internal pressure until burst. Such testing would aid in understanding failure modes and determining adequate operational margins. Such testing is also valuable to correlate structural modeling tools and validate predictions. The large-scale test articles should also be of sufficient gage to evaluate fracture mechanical properties and crack growth propagation. A reusable cryogenic tank technology program should also include inspectability and repairability demonstrations using the large-scale test articles. These test articles could be utilized to evaluate and advance current non-destructive evaluation and inspection methods and field repair techniques for cryogenic tank structures.

Thermal Protection System (TPS)

Light-weight, durable thermal protection systems (TPS) are essential to the development of an operable SSV. The current state-of-the-art TPS materials include the reusable surface insulation (RSI) ceramic tiles, the fibrous reusable surface insulation (FRSI) felt, and the advanced fibrous reusable surface insulation (AFRSI) ceramic blankets of the Space Shuttle Orbiter.[24] Carbon-carbon is also used as a hot structure on the Orbiter. Superalloy hot structures (e.g. columbium) are also within the realm of current technology but remain quite heavy for SSV applications. The current Space Shuttle Orbiter TPS materials are sufficient in temperature capability for future SSV's, which have lower heating because of their lighter planform loading during atmospheric entry; however, the durability and maintainability of the Orbiter TPS must be improved upon to provide more efficient operations. A number of proposed TPS and insulation technologies offer the potential for greater durability, operability, and lighter weight; however, significant research and development remains to be performed before these concepts could reach operational status. Attractive concepts include bonded ceramic tiles with toughened coatings, bonded ceramic blankets with increased durability, mechanically attached metallic panels of inconel and titanium, and mechanically attached carbon-silicon carbide and advanced carbon-carbon panels.[25]

A TPS technology program should include coupon testing of materials and fabrication of small-scale and large-scale TPS panels, blankets, or tiles. Thermal-cycle tests of these test articles should be performed over numerous mission heating cycles. Computational fluid dynamics and appropriate test facilities should be used to determine surface catalycity and boundary layer growth and transition effects. TPS materials must be tested beyond their maximum reuse temperature to determine margins and failure modes. Additional tests should examine the impacts of water absorption, oxidation, corrosion, and surface roughness. Vibro-acoustic testing, rain and lightening-strike testing, debris and micro-meteoroid impact testing, and flutter testing must also be performed. At some point in an SSV technology program, the TPS and insulation testing should be integrated with the large-scale cryogenic tank test program. A large-scale cryogenic tank with insulation and TPS attached could be tested through multiple mission loading, heating, and fill/drain cycles. Limited testing of this type on a different structural concept has been pursued through the NASP technology program. Such a test article could be used to examine a range of operational issues (e.g. remote bond-line inspection and waterproofing verification) related to the integrated cryogenic tank/TPS system.

The TPS materials selected for the reference SSV are pictured in Fig. 11. The reference SSV TPS concept was selected after comparison with a range of alternate approaches. The TPS concepts were evaluated using criteria related to weight/performance, operability, safety, and risk. Advanced carbon-carbon (ACC), with a maximum temperature of 2800-3000°F, is used for the nose region, wing leading edges, and aerodynamic control surfaces.[25] Tailorable advanced blanket insulation (TABI), with a maximum temperature of 2000-2200°F, is used on the windward surfaces of the SSV during atmospheric entry; whereas, the leeward surfaces utilize AFRSI, as used on the Space Shuttle Orbiter, with a maximum temperature of 1000-1400°F.[25] The TPS blankets would be bonded directly to graphite composite carrier panels in the non-cryogenic regions of the SSV. In the region of the integral cryogenic tanks, the TPS blankets would be bonded to a closed-cell cryogenic insulation, which would be bonded directly to the propellant tanks. A number of cryogenic foam insulations have been examined for application to an SSV, and Rhoacell was selected for the reference vehicle because of its superior strength-to-weight and high maximum temperature (400-450°F).[26]

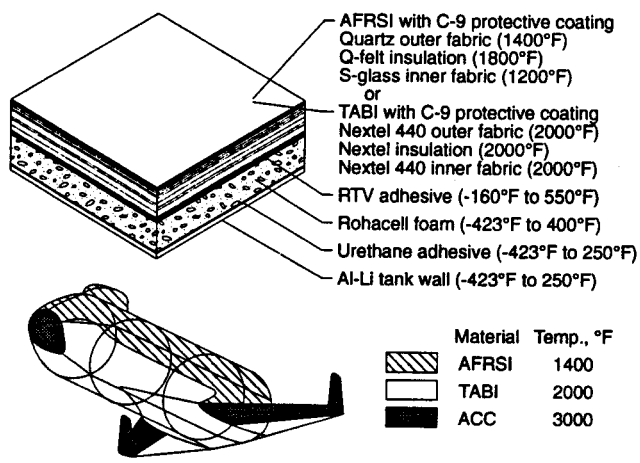

Figure 11. Reference SSV TPS materials.

Rocket Main Propulsion System

The reference SSV uses seven SSME-derivative engines which are gimballed for vehicle control during ascent and abort. The use of seven engines allows a safe abort, with intact vehicle recovery, in the event of a forced single-engine shutdown at any time during the ascent trajectory. The current SSME represents the state-of-the-art in reusable rocket propulsion systems. As indicated by the curves in Fig. 12, the performance of the SSME is sufficient to achieve a reasonably sized SSV; however, the current SSME requires labor-intensive, time-consuming recertification procedures between flights that can be improved upon.

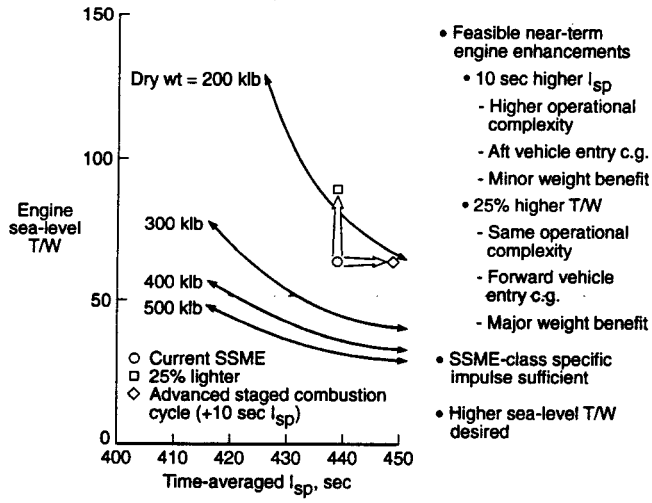

Figure 12. SSV sensitivity to engine parameters.

The SSME-derivative engine used as a baseline in this study differs from the current SSME in a number of ways. Extended-life, high-pressure turbopumps are utilized with hydrostatic bearings. Electromechanical actuators are used for gimbals and valves. Other improvements include integrated health monitoring, a Block II controller, and a two-duct hot gas manifold.[27] A number of baffles and acoustic cavities would also be removed to improve the combustion zone efficiency. No altitude-compensating nozzles or advanced materials are assumed for the reference SSV; however, these could be very important enhancing technologies for reducing the weight and increasing operational margins for a future SSV. Altitude compensating nozzles have the potential to reduce SSV empty weights by 5 percent or more.[28] The use of composites and other advanced materials could reduce the weight of future engines by 20-30 percent.[29,30] The resulting increase in engine sea-level T/W would greatly reduce the size and weight of an SSV and would move the entry center-of-gravity further forward, making the vehicle easier to trim and control aerodynamically. The results illustrated by the curves in Fig. 12, and summarized in Ref. 28, indicate that it would be preferable to focus future technology programs on reducing the weight of reusable propulsion systems rather than focussing on increasing the delivered specific impulse. These are important technologies that should be included in any SSV propulsion technology program.

References 28 and 31 summarize the results of applying a range of new hydrogen and dual-fuel propulsion systems on an SSV. An SSV could benefit significantly from the development of a new hydrogen propulsion system that is would be operationally efficient than proposed SSME-derivatives.[28] A number of studies have also shown that using hydrocarbon fuel in the early stages of an SSV ascent trajectory could reduce empty weights by about 25 percent; however, the introduction of a second fuel increases the complexity of the propulsion system and vehicle.[31] Figure 7 shows the weight benefit of using a dual-fuel propulsion system on the reference SSV. Additional detailed operations simulation and life-cycle costing is required to determine a preferred SSV propulsion system. However, an aggressive technology effort should be pursued in a number of areas to enable the development of a cost-effective SSV. These technology efforts should concentrate on increasing the operability of future reusable propulsion systems rather than increasing performance. Critical technology areas include integrated health monitoring, single-cast construction to eliminate welds, long-life turbopumps with hydrostatic bearings, dual-fuel injectors, purge reduction or elimination, reduction in number of components and fluids, and light-weight, high-strength materials. An SSV propulsion technology program could integrate promising component technologies into a common testbed like that of the SSME. Use of an engine testbed would allow integration of components into a common health management system to demonstrate operability goals.

Subsystems

Current Space Shuttle subsystem servicing requires handling of multiple fluids, many of which are highly toxic and require dedicated ground support equipment. In addition, many subsystems are difficult to access, repair, or replace. These issues, coupled with the additional subsystems required to provide fault tolerance and the mission-unique procedures and software, contribute to the large number of man-hours and cost required to prepare a Space Shuttle for launch. The reference SSV incorporates subsystem approaches that draw on lessons learned from the current STS. The reference SSV design attempts to minimize the number of fluids and associated ground support requirements by utilizing an all-hydrogen, all-electric vehicle. Subsystems would also utilize line-replaceable units (LRU's), grouping components of systems in logical, accessible units that can be replaced easily. All major subsystems would also be grouped into a central health monitoring system which would provide the current and projected status of each major component. Hence, inspections and repairs would be done only to those systems actually requiring service. This capability would be integrated into each subsystem at the component level during design and manufacture. The use of built-in test equipment (BITE) would require that the majority of equipment used to check the flight-readiness of each subsystem would be located on-board the vehicle and managed by the pilot. This would minimize ground support requirements and increase the autonomy of the vehicle.

A number of advanced subsystem technologies would contribute to the development of an affordable SSV. Electromechanical actuators would be used for aerosurfaces, doors, propulsion system valves, and engine gimbals to eliminate the need for high-maintenance hydraulics.[32] High-power-density hydrogen/oxygen fuel cells would be used in place of auxiliary power units to allow the use of a single vehicle fuel. The electrical conversion and distribution system would use 270V DC, under study by the NASP program, to minimize power level and energy capacity requirements.[20] A hydrogen-fueled OMS/RCS system would reduce the number of vehicle fluids and eliminate the need for the high-maintenance hypergols used on the current Space Shuttle Orbiter. A gaseous, pressure-fed hydrogen/oxygen reaction control system (RCS) would be utilized for in-flight control and on-orbit orientation and close-proximity maneuvers. A liquid, pump-fed hydrogen/oxygen orbital maneuver system (OMS) would be utilized for orbital transfer maneuvers. These auxiliary propulsion systems would be integrated as outlined in Ref. 33, which also details the technology requirements of an integrated OMS/RCS system. The majority of the environmental control and life-support systems would utilize existing Space Shuttle technologies. Solid state radiators, however, could provide an important enhancing technology for an SSV by eliminating the need for a freon-based heat rejection system, thereby reducing the number of fluids and associated support requirements.[20] The majority of avionics subsystems would utilize state-of-the-art technologies from the military and commercial aircraft industry: fiberoptics, flat-panel displays, global positioning satellite (GPS) receivers/antennas, heads-up displays, inertial navigation systems (INS), ring laser gyros, advanced micro-processors, smart sensors, etc. Additional avionics technology efforts for single-stage vehicles would focus on integration of a GPS system, an INS, a vehicle health management (VHM) system, an air data system, a radar altimeter, and a data management system into a single integrated flight management unit.[20] Additional technology effort is also required in adaptive guidance, navigation and control architectures and fault-tolerant data management architectures. Further technology efforts in software automated code generation and automated software verification and validation could reduce the development time and schedule risk for an SSV. Advanced technology development of all of these subsystems and components can be accomplished primarily with existing ground-test, laboratory, and computer facilities.

Operations

Current Space Shuttle operations requires a labor-intensive vehicle recertification before each flight. Because of the large number of complex subsystems on the Space Shuttle, a large, highly specialized work-force and an expensive ground support infrastructure are required for vehicle servicing. The mission-unique software , payload configurations, and flight operations procedures required for the current STS limit flexibility and increase cost. Consideration was given to ground and flight operations from the outset of the single-stage vehicle design. Many of the technology advances employed on the reference SSV contribute to significant weight reductions and performance benefits over the current Space Shuttle; however, a large portion of this weight savings has been used to add margin to the vehicle design to enhance the operability, reliability, and safety of the system. In order to achieve the operational efficiencies of commercial aircraft, a philosophy of one-time vehicle flight certification must be pursued. However, this requires building in aircraft-like margins. The SSV would initially be flight-certified for a range of operating conditions, including types of payloads, c.g. location, and target orbits. Nominal mission flight loads would be well below vehicle structural and thermal limit loads. Only scheduled maintenance and service requirements identified by the VHM system would be performed between flights. These maintenance procedures would benefit from the extensive use of LRU's that are designed for easy access. Achieving aircraft-like operational efficiencies would also require the use of a payload containment system with standardized vehicle interfaces. SSV payloads would be processed off-line and have minimal impact on mission scheduling and flight operations. These autonomous payloads would then be integrated into the vehicle just prior to flight using standardized containers with common vehicle interfaces. This approach would allow rapid payload integration and substitution similar to a flat-bed truck.

As mentioned above, the subsystem technologies and design approaches for the SSV were selected to minimize operational support requirements by drawing on lessons learned from the Space Shuttle. In addition to these subsystem technologies, a number of operations technologies require some advanced development to enable an affordable SSV. Leak-free mechanical joints and seals and multiple-gas leak detection systems would reduce unscheduled maintenance requirements. Automated robotic umbilicals, improved engine interface disconnects, and non-pyrotechnic release mechanisms are required to streamline launch pad operations. Automated mission planning and scheduling and paperless data management would benefit mission operations. In addition, the use of integrated health monitoring, built-in test equipment, and adaptive guidance navigation and control would greatly improve vehicle autonomy and improve flight operations. Each of these areas require some advanced technology development and would contribute to the affordability of an SSV.

Computer-Aided System Design and Optimization

The design of an affordable SSV would benefit greatly from improvements in current computer-aided simulation and multidisciplinary design optimization (MDO) technologies. A reusable SSV is a complex, highly coupled system involving a variety of design disciplines (i.e., aerodynamics, structures, aerothermodynamics, propulsion, trajectories, etc.). Single-stage vehicles also tend to be sensitive to increases in size and weight. Hence, the use of advanced MDO techniques are critical to reduce the size and weight and increase the robustness of an SSV to accomplish a given mission. A sample application of MDO to the SSV configuration design is summarized in Ref. 8.

Improvements in detailed simulation techniques in a variety of disciplines would aid in reducing SSV development costs and time. Computational fluid dynamic (CFD) methods for determining the aerodynamic and aerothermodynamic flight environment of a future SSV are critical to reducing the uncertainty of the vehicle thermal and control requirements. Improvements in code validation, grid-generation, and computation time are required to enable large-scale applications of CFD methods. Improved structural modeling and sizing techniques are important to allow the design of a minimum-weight SSV structure to meet the mission loading constraints. Improved thermal/structural modeling techniques are required to properly model the integrated cryogenic tank/insulation/TPS system. Higher-order trajectory models, which will allow the entire SSV mission profile to be simulated on the ground prior to flight, are important to define control system and mission software requirements and to identify potential problems prior to flight. Improvements in existing propulsion system cycle balance modeling, feed system modeling, component weight determination, and CFD are important to enable the selection of the an SSV propulsion system through the use of advanced MDO techniques in the propulsion/vehicle integration design process. Higher-order computer-aided design geometry modeling will enable detailed packaging, routing, and design of all SSV subsystems. Computer tools to allow more detailed modeling and simulation of ground and flight operational procedures are essential to allow system-level trade studies to reduce vehicle support requirements. Perhaps the most important discipline area requiring improvements in simulation capability is life-cycle cost modeling. The cost database for launch vehicles, particularly reusable ones, is very limited. Improvements in the speed and fidelity of operations cost modeling and improvements in the proper modeling of system complexity and risk are required to enable an SSV to be truly designed for cost. Figure 13 demonstrates the importance of designing for cost as early as possible in the conceptual design process. Improved integration of each of these simulation tools is also important to allow rapid interdisciplinary trade studies to minimize cost, weight, complexity, and risk.

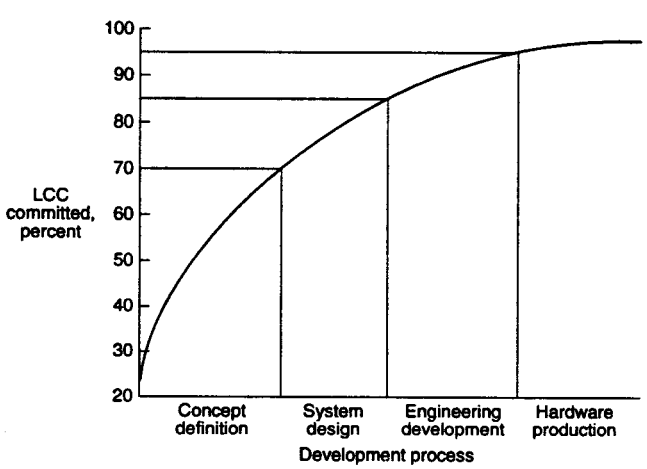

Figure 13. Cost commitment during development process.

Technology Spin-offs

Although it has been the purpose of this paper to define the technology requirements for a reusable rocket-powered SSV, advanced technology development does not, of course, occur in a vacuum. Investment in an SSV advanced technology program similar to that outlined above would have tremendous benefit to industry, consumers, and the economy as a whole. Investments in light-weight, high-strength materials would benefit all transportation sectors, leading to automobiles and aircraft that are lighter in weight and more fuel-efficient. Advanced in high-temperature, light-weight materials will lead to more efficient engines and power plants. Improvements in avionics, software development, and microelectronics would benefit the airline, computer, and consumer electronics industries. Investments in improved system design and MDO techniques would enable the design of higher quality products at all levels of industry. Investment in key SSV technologies would not only enable a significant reduction in future ETO launch costs that would open a range of new markets, but this investment also has the potential for more immediate "down-to-Earth" payoffs.

Summary

A rocket-powered, single-stage launch vehicle has been designed as a part of the Advanced Manned Launch System study to examine options for a next-generation manned space transportation system. The introduction of a reusable single-stage vehicle (SSV) into the U.S. launch vehicle fleet early in the next century could greatly reduce Earth-to-orbit launch costs.

The single-stage vehicle presented in this paper would be expected to have a 2008-2010 initial operating capability in order to phase out an aging Shuttle fleet. Hence, a 1998-2000 technology readiness date has been assumed to represent moderate technology advancements in vehicle structure, propulsion, and subsystems. Although many of these assumed technological advancements contribute to significant weight savings in the vehicle, a portion of this weight savings has been applied to aspects of vehicle design that enhance the operations, reliability, and safety factors of the system.

In defining a technology development plan to enable an affordable SSV, all major technology efforts within the National Aeronautics and Space Administration, the Department of Defense, and the major U,S, aerospace companies were examined and a database was assembled. The technology readiness level of each of the applicable technologies was assessed. The technology requirements for an affordable SSV were determined. An advanced development plan was then derived to advance all major technologies to level 6 or higher prior to beginning full-scale prototype or vehicle development. Test requirements, schedules, and cost were also determined. Technology developments in the areas of structures and materials, reusable cryogenic tanks, thermal protection systems, rocket main propulsion systems, advanced subsystems, operations, and computer-aided system design and optimization will be instrumental in assuring the readiness of low-cost, next-generation space transportation systems.

To enable the design of an affordable SSV, technologies and system design approaches must be utilized that decrease the operational complexity and empty weight of the vehicle. Reductions in SSV empty weight and size have the potential to decrease vehicle development and production costs to a small degree; however, the greatest benefit in reducing empty weight for an SSV occurs when the reduction in empty weight is traded for increased vehicle design margins. Improvements in operability and margins over current systems are important to achieve an affordable SSV; however, the design of a reasonable size SSV for future mission requirements will require unprecedented levels of performance in vehicle propulsion systems, structures, thermal protection, and subsystems. These goals of high performance and improved operability are often in opposition. The key to achieving both is to provide a large investment in high-payoff technologies prior to SSV development. A portion of these technology benefits will be used to provide sufficient performance to enable the design of a reasonable size SSV with reduced sensitivity to weight growth. The remaining portion would be utilized to provide reduced operational complexity and large vehicle design margins, which will contribute to higher system reliability, lower attrition rates, improved crew safety, and decreased development and operational risk, thereby leading to a more affordable system.

References

1. Freeman, D. C., Wilhite, A. W., and Talay, T. A., "Advanced Manned Launch System Study Status," IAF Paper 91-193, Oct. 1991.

2. Stanley, D. O., Talay, T. A., Lepsch, R. A., Morris, W. D., and Wurster, K. E., "Conceptual Design of a Fully Reusable Manned Launch System," Journal of Spacecraft and Rockets, Vol. 29, No. 4, 1992, pp. 529-537.

3. Stone, H. W. and Piland, W. M., "An Advanced Manned Launch System Concept," IAF Paper 92-0870, Aug. 1992.

4. Piland, W. M. and Talay, T. A., "Advanced Manned Launch System Comparisons," IAF Paper 89-221, Oct. 1989.

5. Freeman, D. C., Talay, T. A., Stanley, D. O., and Wilhite, A. W., "Design Options for Advanced Manned Launch Systems," AIAA Paper 90-3816, Sept. 1990.

6. Stanley, D. O., Engelund, W. C., Wilhite, A. W., and Laube, J., "A Comparison of Single-Stage and Two-Stage Airbreathing Launch Vehicles at High Staging Mach Numbers," Journal of Spacecraft and Rockets, Vol. 29, No. 5, 1992, pp. 735-740.

7. Talay, T. A. and Morris, W. D., "Advanced Manned Launch Systems," Proceedings of the 2nd European Aerospace Conference on Progress in Space Transportation, May 1989.

8. Stanley, D. O., Engelund, W. C., Lepsch, R. A., McMillin, M., Wurster, K. E., Powell, R. W., Guinta, A. A., and Unal R., "Rocket-Powered Single-Stage Vehicle Configuration Selection and Design," AIAA Paper 93-1053, Feb. 1993.

9. Braur. G. L., Cornick, D. E., and Stevenson, R., "Capabilities and Applications of the Program to Optimize Simulated Trajectories (POST)," NASA CR-2770, Feb. 1977.

10. McMillin, M. L., et. al., "A Solid Modeler for Aerospace Vehicle Preliminary Design," AIAA Paper 87-2901, Sept. 1987.

11. Divan, P. E., "Aerodynamic Analysis System for Conceptual and Preliminary Analysis fom Subsonic to Hypersonic Speeds," AIAA Paper 80-1897, Aug. 1980.

12. Engle, C. D. and Praharas, S. C., "Miniver Upgrade for the AVID System: Lanmin User's Manual," NASA CR-172212, Aug. 1982.

13. Simberg, R. E., "Space Transportation Comparison Study - NDV Task 11, Phase 1, Final Report," Rockwell International, Downey, CA, Rockwell Report NA-90-283, Sept. 1990.

14. Anon., "Civil Needs Data Base FY92 Version," NASA TM 108575, May 1992.

15. Kessler, T. L. and Labbee, M. F., "Earth-to-Orbit Delivery Systems; How Future Needs Affect Today's Decisions," AIAA Paper 91-0538, Jan. 1991.

16. Naftel, J. C., Engelund, W. E., Lepsch, R. A., Powell, R. W., and Bacon, J., "Ascent Abort Capability for a Rocket-Powered Single Stage Advanced Manned Launch System," AIAA Paper 93-3694, Aug. 1993.

17. Powell, R. W. and Freeman, D. C., Jr., "Application of a Tip-Fin Controller to the Shuttle Orbiter for Improved Yaw Control," Journal of Guidance, Control, and Dynamics, Vol. 5, No. 4, 1982, pp. 325-329.

18. Falcone A. and Laakso, J. H., "System Integration and Demonstration of Adhesive Bonded High Temperature Aluminum Alloys for Aerospace Structure," NASA CR 191459, July 1993.

19. Simon, N. J., Drexler, E. S., and Reed, R. P., "Review of Cryogenic Mechanical and Thermal Properties of Al-Li Alloys and Alloy 2219," Astronautics Laboratory (AFSC) Report AL-TR-90-064, Sept. 1990.

20. Erlich, C. F., Jr., "Advanced Manned Launch System Study Final Report - Task 3," NASA CR 189673, Sept. 1992.

21. Sorensen J., "Titanium Matrix Composites," NASP CR 1096, July 1990.

22. Bates, W. F., Jr., and Lauraitis, K. N., "Development of Advanced Metal Matrix Composites," NASP CR 1101, Dec. 1991.

23. Robinson, J. C., and Stanley, D. O., "Structural and Loads Analysis of a Two-Stage Fully Reusable Advanced Manned Launch System," AIAA Paper 92-4774, Sept. 1992.

24. Chiu, S. A. and Pitts, W. C., "Reusable Surface Insulations for Reentry Spacecraft." AIAA Paper 91-0695. Jan. 1991.

25. Scotti, S. J., "Current Technology for Thermal Protection Systems," NASA CP 3157, Feb. 1992.

26. McAuliffe, P. S., Taylor, A. H., Sparks, L. L., and Dube, W. P., "Reusable Cryogenic Foam Insulation for Advanced Aerospace Vehicles," AIAA Paper 91-0542, Jan. 1991.

27. Paster, R. D. and Stohler, S. L., "SSME Evolution for Next-Generation Launch Systems," AIAA Paper 89-2502, July 1989.

28. Stanley, D. O., Engelund, W. C., and Lepsch, R. A., "Propulsion System Requirements for Reusable Single-Stage-to-Orbit Rocket Vehicles," AIAA Paper 92-3504, July 1992.

29. Judd, D. C., "Composite Material Application to Liquid Rocket Engines," Aerojet Report 2418-F, Dec. 1982.

30. Adams, A. and Parsley, R. C., "High Performance O2/H2 Engine Definition," Pratt & Whitney Report FR-21119, March 1990.

31. Lepsch, R. A., Stanley, D. O., and Unal R., "Application of Dual-Fuel Propulsion to a Single-Stage AMLS Vehicle," AIAA Paper 93-2275, June 1993.

32. Hammond, M. and Sharkey, J., "Electrical Actuation Technology Bridging," NASA CP 3213, Sept. 1992.

33. Gerhardt, D. L., "Integrated Hydrogen/Oxygen Technology Applied to Auxiliary Propulsion Systems," NASA CR 185289, Sept. 1990.