The Role of Analytic Methods in Computational Aeroacoustics

by
F. Farassat and J. W. Posey
NASA Langley Research Center

Abstract

As air traffic grows, annoyance produced by aircraft noise will grow unless new aircraft produce no objectionable noise outside airport boundaries. Such ultra-quiet aircraft must be of revolutionary design, having unconventional planforms and most likely with propulsion systems highly integrated with the airframe. Sophisticated source and propagation modeling will be required to properly account for effects of the airframe on noise generation, reflection, scattering, and radiation. It is tempting to say that since all the effects are included in the Navier-Stokes equations, time-accurate CFD can provide all the answers. Unfortunately, the computational time required to solve a full aircraft noise problem will be prohibitive for many years to come. On the other hand, closed form solutions are not available for such complicated problems. Therefore, a hybrid approach is recommended in which analysis is taken as far as possible without omitting relevant physics or geometry. Three examples are given of recently reported work in broadband noise prediction, ducted fan noise propagation and radiation, and noise prediction for complex three-dimensional jets.

Introduction

Current production commercial transport aircraft are about 20 dB quieter than the first generation of jet aircraft introduced more than four decades ago. Nevertheless, noise complaints from airport communities remain high. Because community annoyance increases with air traffic volume as long as the per event level is above a threshold, both NASA and the European Union have declared a long-range vision to keep all objectionable noise within airport boundaries. Realization of this vision would permit growth in air traffic unconstrained by community noise concerns. The required reduction in single-event levels to realize this vision is dependent upon the aircraft and the airport, but for most cases, levels will have to be reduced at least another 20 dB.

It is the authors' opinion that an aircraft that is 40 dB quieter (a factor of 10,000 reduction in acoustic energy) than a 707 will not look anything like a 707. That is, the goal will not be reached via incremental improvements in components such as engines, flaps, slats, and landing gear. Revolutionary aircraft are required that will be designed with noise as a design objective, not as a design constraint. Propulsion systems will be integrated with the airframe, not just hung onto it. Noise prediction for such innovative configurations cannot be made by extrapolation of data from the current aircraft fleet. Instead, predictions for use during design must be based on accurate physical modeling of relevant noise generation and propagation phenomena.

Classically, aircraft noise has been divided into the subtopics of propulsion noise, airframe noise, and interior noise. Of course, it has always been known that interactions among these areas exist, but it has commonly been assumed that they were independent or that the results from one area could be used as input to another, with no feedback. As highly integrated systems are developed, noise predictions for both interior and exterior levels must be made using comprehensive models which account for noise generation and propagation when propulsion systems are integrated and airframe planforms, materials, and structures are unconventional.

Subtopics in aeroacoustics that must be mastered before noise predictions can be made for aircraft of purely arbitrary configuration include:

- Subsonic and supersonic jet noise
    - Multiple jets
    - 3-D nozzle designs
- Ducted fan noise (with nacelle geometry and liner effects)
    - Generation
    - Propagation
    - Radiation
- Airframe noise
    - High lift system (flap, slat, …)
    - Landing gear
    - Boundary layer
- Aircraft interior noise
- Rotating blade noise
    - Helicopter main and tail rotors
    - Propellers
    - Windmills
    - Industrial rotating machinery
- Propagation and scattering
    - Wing and fuselage scattering
    - Long range propagation and absorption

The Case for Analytic Methods

In order to develop and optimize noise control technology, it is necessary to have good noise prediction methodologies appropriate to the systems under consideration. A good noise prediction methodology must have several essential attributes. First, it includes the relevant physics with minimum approximation, which means that the governing equations are used with only appropriate simplifying assumptions. Such assumptions might include low mach numbers, a uniform flow field, rigid boundaries, etc. Next, a good methodology incorporates realistic geometry and kinematics. This is especially important for rotating blades, duct propagation, and fuselage interaction. The methodology must be robust and accurate. Robust means that it will reliably generate an answer for the full range of parameters of interest, and accurate means that the answer generated is the correct answer. If the methodology is to be useful to designers, it must also produce answers quickly and use minimum computer resources. That is, efficiency is critical.

A noise prediction methodology has two major components: a mathematical model and the computer algorithm along with its realization in a code that produces numerical results. Therefore, the overall efficiency is a function of both the mathematical model and the computational algorithms. If

the model is simply the Navier-Stokes equations with no specialization, then the method could be said to be purely numerical. Such methods depend entirely on clever computer coding and fast computers for their efficiency. Even though astronomical improvements have been made in these areas, and even greater gains are anticipated, the computer resources required for direct numerical solution of most aeroacoustic prediction problems are prohibitive for most aircraft designers because of the large range of frequencies of interest and distances involved. It is believed that this state of affairs will continue for the foreseeable future.

What should aeroacousticians do to predict aircraft noise? We have found that the best choice is a *hybrid method* which combines analytic with numerical methods, using whichever is more appropriate for each portion of the problem. In using an analytic method, one should always know when to stop the analytic development s and use a computer for numerical evaluations. This means that *finding a closed form solution should not be our aim* if we have to make too much idealization and approximation. Often an analytic solution based on Green's function approach involving surface and volume integrals that are evaluated numerically using exact geometry, kinematics and fluid dynamic data as input is much more useful to engineers than using the same solution but evaluating the integrals analytically with simplifying assumptions of the input data. The latter approach is, of course, appropriate in basic research when the noise generation phenomenon is studied. However, the former approach can result in more accurate and reliable acoustic predictions. The numerical methods that we are talking about here also include FD, FEM and spectral methods.

Sample Studies

Three recent studies reported by NASA researchers are given as examples of the use of analytic methods in computational aeroacoustics.

1. Broadband Noise

Casper and Farassat (ref. 1) developed a new time-domain formulation for prediction of broadband noise generation from a surface subjected to a temporally and spatially varying pressure distribution. The formulation is a new solution of the Ffowcs Williams-Hawkings equation, which decouples the aerodynamics and the acoustics. The formulation (referred to as Farassat's Formulation 1B) is very simple and applies to surfaces in uniform motion, accelerating as well as rotating surfaces such as fan blades and rotors. The formulation is suitable for statistical analysis of broadband sources. Figure 1 shows the formulation along with a graphical definition of the geometrical parameters. An input pressure history, p(**x**,t), defined on the surface is required and could be provided analytically, by a CFD computation or by experimental measurement.

Figure 2 is a comparison of predictions from the new formulation with spectra measured by Paterson and Amiet (ref. 2). Except for the lowest flow speed and for the filled data points (representing levels of the order of background noise), the comparison is excellent.

This example shows that accurate, rapid calculation of broadband noise is possible for many problems of practical importance. Of course, the unsteady aerodynamics problem of predicting the surface pressure remains. However, advances in turbulence simulation such as LES and DNS will enable aeroacousticians to calculate broadband noise from fans and airframe efficiently. In accordance with our philosophy of development of aeroacoustic methodologies, here we have derived an analytic result that is evaluated numerically on a computer with realistic geometry, kinematics and surface pressure data.

$$4\pi p'(\vec{x},t) = \int_{\tilde{f}>0} \left[\frac{(\partial p/\partial \tau - V \partial p/\partial s)\cos\theta}{c_0\, r(1-M_r)} \right]_{\text{ret}} dS + \int_{\tilde{f}>0} \left[\frac{p\cos\theta}{r^2(1-M_r)} \right]_{\text{ret}} dS - \int_{\tilde{f}=0} \left[\frac{M_v\, p\cos\theta}{r(1-M_r)} \right]_{\text{ret}} d\ell$$

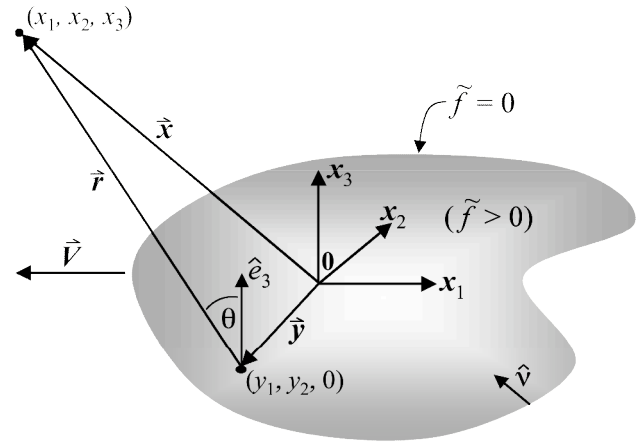

Figure 1. Time-Domain formulation (1B) for the acoustic pressure, p', in the farfield due to fluctuating pressure on an arbitrary surface.

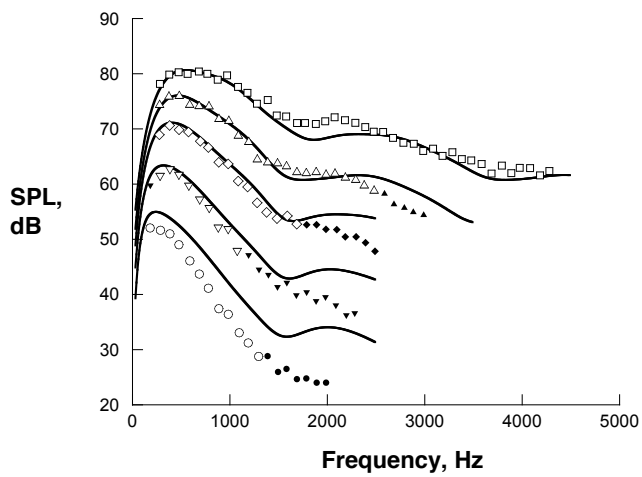

Figure 2. Measured and predicted noise normal to an airfoil with incident turbulent flow. Symbols are measured data from Paterson and Amiet (1977) for various wind tunnel flow velocities: □, 165 m/s; △, 120 m/s; ◇, 90 m/s; ▽, 60 M/s; ○, 40 m/s. Solid lines are predicted using Formulation 1B with surface pressure from Amiet unsteady airfoil theory using measured inflow turbulence.

2. Ducted Fan Noise

Dougherty (ref. 3) and Lan (ref. 4) developed a duct propagation code, CDUCT, which was based on the parabolic approximation with no upstream reflections. The name comes from the shape of the two ducts formed when the annular fan exhaust is split by a pylon on top and a bifurcation on the bottom. In this code two analytic methods are used to obtain a highly efficient and useful code that accepts realistic geometry and kinematics. These methods are:

i. Parabolic approximation for duct propagation that allows liner specification on any specified part of the duct and pylon surfaces,

ii. The Ffowcs Williams-Hawkings (FW-H) equation with penetrable data surface for radiation from inlet and exhaust.

Nark, et al., (ref. 5) have produced a user-friendly code called CDUCT-LaRC by installing a sophisticated graphical user interface (GUI) that guides the users in specifying input data. We present one example in figure 3 that shows how the introduction of the pylon and bifurcation destroy the axisymmetric pattern expected for the case where the fan is assumed to generate a single propagating spinning mode. This is an example of a difficult calculation that is computed in just a few minutes on a desktop computer. In this code, the background compressible steady flow is computed using a CFD technique. Again, the methodology developed is a hybrid method combining analytic and numerical techniques to obtain a highly efficient noise prediction code.

3. Jet Noise

Hunter and Thomas (ref. 6) show impressive results from a new jet noise prediction code, Jet3D, which is CFD-based and is applicable to installed jets with complex three-dimensional turbulent flows. A Reynolds-averaged Naver-Stokes solver is used with a new turbulence model to predict detailed, dynamic flow properties, including the Reynolds stress tensor. This stress tensor is the source term in Lighthill's Acoustic Analogy, LAA (ref. 7), which replaces the complicated jet flow by a fictitious distribution of quadrupoles radiating into a uniform medium. While it is not intuitively obvious that flow effects such as convection and refraction can be properly accounted for by a distribution of quadrupoles, this can be proven to be the case. Morris and Farassat (ref. 8) demonstrate how LAA, when correctly applied, works in a broad range of aeroacoustic situations. Again it is clear that analytic methods play a major role in the prediction of the noise of jets. However, advanced CFD techniques as well as numerical methods also are used to achieve the goals of jet noise prediction.

The complex, non-axisymmetric nozzle shown in figure 4 was run at Langley Research Center as part of a study of pylon effects on jet noise. Comparisons of measured and predicted jet noise spectra at several radiation angles are shown in figure 5. Agreement between measured jet noise spectra and those predicted by Jet3D are generally excellent. The underprediction of low frequency noise in the aft arc is most likely due to improper allowance for refraction effects, and an improved correction procedure is being developed. The metric used to estimate potential annoyance of aircraft flyovers is the Effective Perceived Noise Level (EPNL), which applies an A-weighting to instantaneous spectra and integrates over a complete flyover event to arrive at a single

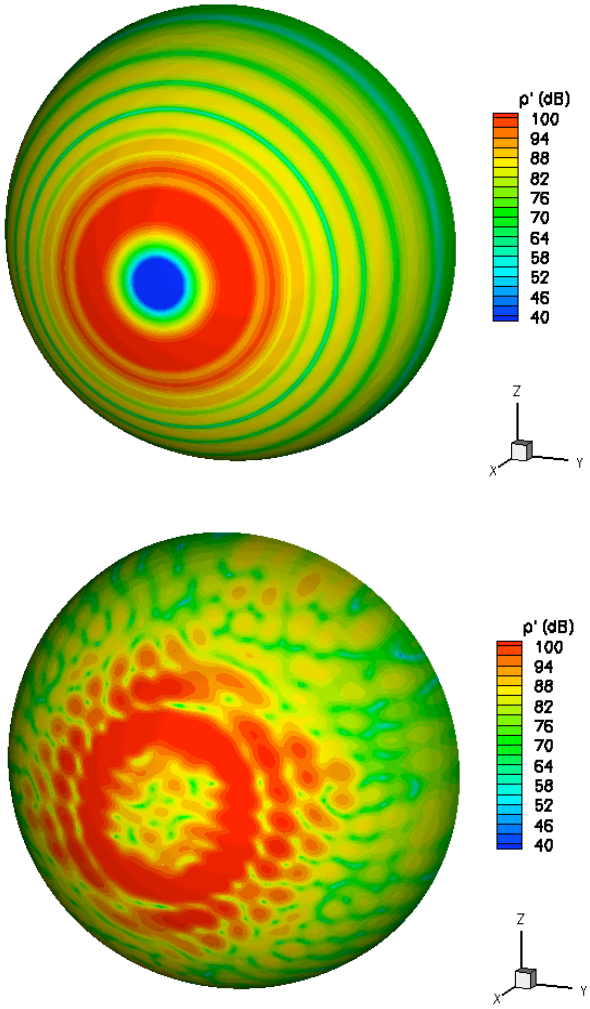

Figure 3. Sound level contours on a reference hemisphere centered on the axis of an annular fan bypass duct. The fan excites only the (10,1) spinning mode. The top contour is for a straight, unobstructed annular duct, and the bottom contour is for a duct divided by a pylon and a lower bifurcation into two C-shaped ducts.

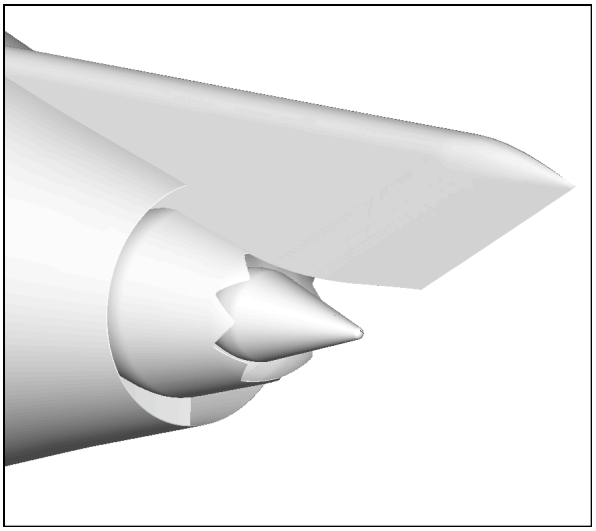

Figure 4. Nozzle with chevrons on the primary exhaust and a simulated pylon. The pimary nozzle diameter is 0.128m and the nominal bypass ratio is 5.

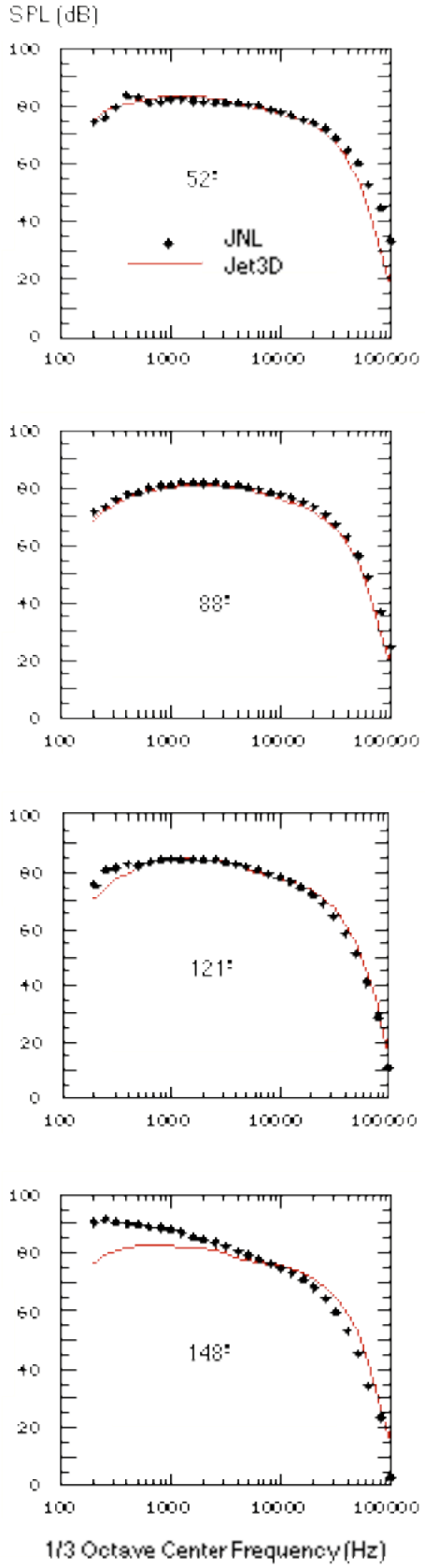

Figure 5. Spectra measured and predicted for microphones in a sideline array during testing in the Langley Jet Noise Laboratory (JNL) of the nozzle shown in figure 4. The angles given are with respect to the inlet axis.

number. If the spectra of figure 5 are translated to full scale and used to calculate EPNL, the measured data result in 84.86 EPNdB and the Jet3D predictions result in 84.23 EPNdB. Similar agreement has been found for several other nozzle configurations.

This example shows that the LAA, put forward 50 years ago, is still an excellent approach to modeling noise generation by complex flow situations. In fact, using it in conjunction with state-of-the-art flow and turbulence calculations gives excellent noise predictions.

Concluding Remarks

Analytic methods have been successfully used in computational aeroacoustics for many important problems over the last 50 years. Three recent examples are given. Many problems associated with CFD-based CAA (such as grid generation, numerical dissipation and dispersion, approximate boundary and radiation conditions, etc.) do not appear in analytic-based CAA.

While the purist might wish to arrive at a closed form solution, this is seldom possible for problems of practical interest. Therefore, hybrid methods are recommended, where analytics are used as much as possible, but numerics are applied when necessary to avoid unrealistic physical or geometric assumptions. The authors expect that the use of analytic methods in CAA will increase as additional areas of mathematics are applied in acoustics. For example, the use of nonlinear generalized functions, nonstandard analysis, and Lie group theory may prove advantageous for some acoustic problems.

References

1) Casper, J., and Farassat, F., “A New Time Domain Formulation for Broadband Noise Predictions”, *International Journal of Aeroacoustics*, Vol. 1, No. 3, pp. 207-240, 2002.
2) Paterson, R. W. and Amiet, R. K., “Noise and Surface Pressure Response of an Airfoil to Incident Turbulence," AIAA Journal of Aircraft, Vol. 14, No. 8, pp. 729-736, 1977.
3) Dougherty, R. P., “A Wave-Splitting Technique for Nacelle Acoustic Propagation,” AIAA Paper 97-1652, 1997.
4) Lan, J. H., “Turbofan Duct Propagation Model,” NASA CR 2001-211245, 2001.
5) Nark, D. M., Farassat, F., Pope, D. S., and Vatsa, V., “The Development of the Ducted Fan Noise Propagation and Radiation Code CDUCT-LaRC”, AIAA paper 2003-3242,
6) Hunter, C. A. and Thomas, R. H., “Development of a Jet Noise Prediction Method for Installed Jet Configurations”, AIAA paper 2003-3169, May 2003.
7) Lighthill, M. J., “On Sound Generated Aerodynamically. I. General Theory," Proceedings of the Royal Society of London, A 211, pp. 564-587, 1952.
8) Morris, P. J. and Farassat, F., “Acoustic Analogy and Alternative Theories for Jet Noise Prediction," AIAA Journal, Vol. 40, No. 4, pp. 671-680, 2002.