AIAA 96-1705

Generalized Functions and Kirchhoff Formulas

F. Farassat
NASA Langley Research Center
Hampton, VA

Note: Corrected for misprints May 10,1996

2nd AIAA/CEAS Aeroacoustics Conference
May 6-8,1996/State College, PA

For permission to copy or republish, contact the American Institute of Aeronautics and Astronautics
370 L'Enfant Promenade, S.W., Washington, D.C. 20024

GENERALIZED FUNCTIONS AND KIRCHHOFF FORMULAS

F. Farassat*
NASA Langley Research Center, Hampton, VA 23681, USA

ABSTRACT

The theory of generalized functions was developed by L. Schwartz in the forties. It has had a major impact in many areas of mathematics, physics, and engineering. In particular, the solution of many of the problems of wave propagation in acoustics can be simplified by using generalized function theory. In this theory, mathematical objects other than ordinary functions, such as the Dirac delta function $\delta(\bar{x})$ and its derivatives, are treated rigorously. One begins by thinking of a function $f(x)$ not as a table of ordered pair $(x, f(x))$ but as table of the action of $f(x)$ on functions in a suitable space of functions D. This action is defined by the functional $F[\phi] = \int f\phi\, dx$ where $\phi \in D$. After selecting D and defining linearity and continuity of a functional on D, we define generalized functions as the space of all continuous linear functionals on D. Each functional produces a generalized function by the table of the functional values on D. The operational properties of generalized functions make them very useful in applications. For our purpose in acoustics, the most important generalized functions are the Dirac delta function $\delta(f)$ and its derivatives, where f is a closed or open moving surface. The theory part of this paper is based on NASA Technical Paper 3428 (May, 1994) by the author. Next the derivation of the subsonic and supersonic Kirchhoff formulas are briefly discussed. This part of the paper is based on two works of Farassat and Myers (JSV, Vol. 123 (3), 1988, 451-460 and on a paper presented at the First Joint CEAS/AIAA Aeroacoustics Conference, June 12-15, 1995, Munich, Germany). These latter articles are included as an appendix to the present paper. Finally, some remarks on the development and validation of codes based on Kirchhoff formulas are made to help in the application of these results.

*Senior Research Scientist, Aeroacoustics Branch, Fluid Mechanics and Acoustics Division. Associate Fellow AIAA.

Copyright © 1996 by the American Institute of Aeronautics and Astronautics, Inc. No copyright is asserted in the United States under Title 17, U.S. Code. The U.S. Government has a royalty-free license to exercise all rights under the copyright claimed herein for government purposes. All other rights are reserved by the copyright owner.

INTRODUCTION

When Ffowcs Williams and Hawkings published their now famous paper on the noise from moving surfaces in 1969,[1] they used a level of mathematical sophistication unfamiliar to engineers who would later be the main users of this work. Advanced generalized function theory and differential geometry were employed by these authors to derive the Ffowcs Williams - Hawkings (FW-H) Equation and to obtain some important qualitative results in this paper. The subject of generalized functions is very abstract, particularly as described in books written by mathematicians. The level of differential geometry needed in acoustics is, however, basic and at the level essentially fully developed by the end of the nineteenth century. Both of these subjects are not emphasized in engineering education. It is possible to teach advanced generalized function theory to engineers if some of the abstractions are left out initially. One needs to learn how to work with multidimensional Dirac delta functions and their derivatives concentrated on moving surfaces, i.e. with support on moving surfaces. This goal can be achieved.

This paper is written as a guide to the users of generalized functions in acoustics. The application of this theory to derivation of the subsonic and supersonic Kirchhoff theory is also discussed. All the materials of interest are in the papers of the author[2-4] (see Appendix A). The first is NASA Technical Paper 3428 (May, 1994) which can be downloaded from the internet. The second is a soon to be published NASA Technical Memorandum on the derivation of Kirchhoff formulas. Two papers which are co-authored by M. K. Myers are also included in this appendix.

In the next section, some general comments on generalized function theory are made. In particular, we indicate what areas of generalized function theory must be learned initially for applications in acoustics. In the following section, we discuss the derivation of the subsonic and the supersonic Kirchhoff formulas. This section is complementary to the papers in Appendix A on Kirchhoff formulas. We make some remarks on the development and

validation of codes based on the Kirchhoff formula in the following section. For completeness, in Appendix B, we give a formula for the mean curvature of the Σ-surface (the influence surface) of a moving surface $f(\bar{y}, \tau) = 0$ which is needed in the supersonic Kirchhoff formula.

GENERALIZED FUNCTIONS

Our main reference for this section is NASA TP-3428.[2] See Appendix A. To derive the Kirchhoff formulas for moving surfaces, we need to learn how to manipulate multidimensional Dirac delta functions and their derivatives. Some knowledge of differential geometry and tensor analysis is also essential. In addition to reference 2, we give some other useful references on generalized functions as well as on differential geometry and tensor analysis in this paper.[5-13] To learn about generalized functions, we need *a change of paradigm* in the way we look at ordinary functions. Ordinary functions are locally (Lebesgue) integrable functions, i.e., functions that have a finite integral over any finite interval. This change of paradigm is actually very familiar in mathematics. For example, learning about fractions, negative numbers and complex numbers involves a change of paradigm although we are not told that the change is occurring.

How do we think of an ordinary function $f(x)$? We think of this function as a table of ordered pairs $(x, f(x))$. A graph of a function is a plot of this table. In generalized function theory, we need to work with mathematical objects such as the Dirac delta "function" $\delta(x)$ with the sifting property

$$\int_{-\infty}^{\infty} \phi(x)\delta(x)dx = \phi(0) \qquad (1)$$

It can be shown that no ordinary function has this property. The Dirac delta function is an example of a generalized function which is not an ordinary function. To include $\delta(x)$ and other such useful but strange objects in mathematics, we change our method of thinking about functions as follows. Suppose we take a space of functions D which will be called *test function space*. We will be more specific about D below. Now given an ordinary function $f(x)$, let us define the *functional*

$$F[\phi] = \int_{-\infty}^{\infty} f\phi\, dx, \qquad \phi \in D. \qquad (2)$$

If we take the space D large enough, then there is a possibility that the table of functional values $F[\phi]$ where $\phi \in D$ can identify $f(x)$. This is actually true if we take the space D as the space of all c^{∞} functions which are identically zero beyond a bounded interval, i.e., with compact support. Therefore, the new paradigm of viewing a function is: *think of the function $f(x)$ in terms of the table $\{F[\phi], \phi \in D\}$.* We can show that this table includes an uncountable number of elements.

Next, one shows that the functional $F[\phi]$ given by eq. (2) is *linear* and *continuous* for an ordinary function $f(x)$.[2, 7-9] We ask whether all continuous linear functionals are produced by ordinary functions from eq. (2). The answer is no. For example, the functional

$$\delta[\phi] = \phi(0) \qquad \phi \in D \qquad (3)$$

is linear and continuous. Therefore, the class of linear and continuous functionals is larger than the class generated by ordinary functions through eq. (2). Now, using our new paradigm of thinking of a function as a table generated by the functional rule we say:

a generalized function is identified by the table produced using a continuous linear functional on space D.

By an abuse of terminology, we say that:

generalized functions are continuous linear functionals on space D.

By this definition the functional in eq. (3) is (represents) the Dirac delta function! Note that each continuous linear functional on space D produces (represents, identifies, gives) *one* generalized function. Ordinary functions then become a subset of generalized functions called *regular* generalized functions. Other functions are called *singular* generalized functions.

Next the operations on ordinary functions are extended to all generalized functions in such a way that they are equivalent to the old definitions when applied to ordinary functions. To do this, one should write the operation in the language of functionals on space D. For example, the

derivative of generalized function $F[\phi]$ is defined by

$$F'[\phi] = -F[\phi'] \tag{4}$$

In this way, many operations on ordinary functions can be extended to generalized functions.[2, 5-9]

Finally, we mention here that the space of generalized functions on D is called D'. For any singular generalized function $F[\phi]$, we use eq. (2) with a *symbolic* function $f(x)$ under the integral sign. Here the integral does not represent an ordinary integral but stands for the rule specified by $F[\phi]$. For example, $\delta(x)$ is a symbolic function which is interpreted as follows. Interpret $\int \delta(x)\phi(x)\,dx$ as $\delta[\phi] = \phi(0)$ for all $\phi \in D$, i.e., in our new way of looking at functions as a table of functional values on space D

$$\delta(x) \equiv \{\phi(0),\ \phi \in D\}. \tag{5}$$

Of utmost importance to us are delta functions and their derivatives with support on a surface $f = 0$. Here $f = f(\vec{x})$ or $f = f(\vec{x}, t)$. We give the following two results[2] assuming that $|\nabla f| = 1$ on $f = 0$, which is always possible:

$$\int \phi(\vec{x})\delta(f)\,d\vec{x} = \int_{f=0} \phi\, dS \tag{6}$$

$$\int \phi(\vec{x})\delta'(f)\,d\vec{x} = \int_{f=0}\left[-\frac{\partial\phi}{\partial n} + 2H_f\phi\right] dS \tag{7}$$

where H_f is the local mean curvature of the surface $f = 0$ with dS the element of the surface area. Also if the function $f(\vec{x})$ has a discontinuity across a surface $g(\vec{x}) = 0$ with the jump defined as

$$\Delta f = f(g = 0+) - f(g = 0-), \tag{8}$$

then

$$\overline{\nabla} f = \nabla f + \Delta f\ \nabla g\ \delta(g) \tag{9}$$

where $\overline{\nabla} f$ is the generalized gradient of $f(\vec{x})$.[2] Finally, we mention here that the Green's function method is valid for finding solutions of differential equations with discontinuities (weak solutions) provided that all derivatives in the differential equation are viewed as generalized derivatives.

THE KIRCHHOFF FORMULAS FOR MOVING SURFACES

Assume that $f(\vec{x}, t) = 0$ is the moving Kirchhoff surface defined such that $|\nabla f| = 1$ on this surface. Let ϕ satisfy the wave equation in the exterior $\overline{\Omega}$ of $f = 0$, i.e.,

$$\Box^2\phi = 0 \qquad \vec{x} \in \overline{\Omega} \tag{10}$$

Extend ϕ to the entire unbounded space as follows, calling the extended function $\tilde{\phi}$

$$\tilde{\phi} = \begin{cases} \phi(\vec{x}, t) & \vec{x} \in \overline{\Omega} \\ 0 & \vec{x} \notin \overline{\Omega} \end{cases} \tag{11}$$

The governing equation for deriving the Kirchhoff formula for moving surfaces is then found by applying the generalized wave operator (D'Alembertian) to $\tilde{\phi}$ to get:[2-4]

$$\begin{aligned} \overline{\Box}^2\tilde{\phi} = &-\left(\phi_n + \frac{1}{c}M_n\phi_t\right)\delta(f) \\ &-\frac{1}{c}\frac{\partial}{\partial t}\left[M_n\phi\delta(f)\right] \\ &-\nabla \bullet \left[\phi\ \vec{n}\ \delta(f)\right] \end{aligned} \tag{12}$$

where $M_n = \frac{v_n}{c}$ is the local normal Mach number on $f = 0$, $\phi_n = \frac{\partial\phi}{\partial n}$ and $\phi_t = \frac{\partial\phi}{\partial t}$.

We can now apply the Green's function method for the wave operator in the unbounded space to eq. (11) to find the Kirchhoff formula for subsonically moving surfaces.[3] The formula involves a Doppler singularity making it inappropriate for a supersonically moving surface. For supersonic surfaces, we derive the Kirchhoff formula for an open surface (e.g. a panel). The reason is that the Kirchhoff surface is usually divided into panels and the formula is applied individually to each panel. The subsonic formula, applies to both open and closed surfaces. However, the supersonic formula

differs for open and closed surfaces. If the formula for an open surface is known, obtaining the formula for a closed surface is trivial.

The governing equation for deriving the supersonic Kirchhoff formula for a panel is

$$\overline{\Box}^2\tilde{\phi} = -\left(\phi_n + \frac{1}{c}M_n\phi_n\right)H(\tilde{f})\delta(f) - \frac{1}{c}\frac{\partial}{\partial t}\left[M_n\,\phi\,H(\tilde{f})\,\delta(f)\right] - \nabla\bullet\left[\phi\,\vec{n}\,H(\tilde{f})\,\delta(f)\right] \quad (13)$$

where $H(\tilde{f})$ is the Heaviside function, $\tilde{f}$ is a function such that $\tilde{f} > 0$ on the panel and $f = \tilde{f} = 0$ defines the edge of the panel. The derivatives on the right side of eq. (13) are brought inside to get three source terms involving $H(\tilde{f})\,\delta(f)$, $H(\tilde{f})\,\delta'(f)$ and $\delta(\tilde{f})\,\delta(f)$.[4] The solutions of the wave equation with these kinds of sources are given by the author.[2] The Kirchhoff formula for a supersonically moving surfaces using the above method was derived and presented by Farassat and Myers.[4] It is a particularly simple and straightforward result and easy to apply. This formula requires the mean curvature H_F of the surface Σ: $F(\vec{y};\vec{x},t) = \left[f(\vec{y},\tau)\right]_{ret}$. We give the formula for calculation of H_F in Appendix B in terms of the geometric and kinematic parameters of the Kirchhoff surface $f = 0$.

SOME REMARKS ON DEVELOPMENT AND VALIDATION OF KIRCHHOFF CODES

The development of a Kirchhoff code requires a good subroutine for retarded time calculation if the Kirchhoff surface is rotating. The possibility of multiple emission times for a supersonic panel complicates retarded time calculation, particularly for two nearly equal emission times. If the Kirchhoff surface is not selected properly for the supersonic formula, there is the possibility of a singularity.[4] This singularity can be avoided as suggested by Farassat and Myers[4] or by using two different Kirchhoff surfaces for different intervals of the observer time. There is a fool-proof test of the Kirchhoff code that must not be ignored by code developers. Both of the Kirchhoff formula for moving surfaces, as well as that for a stationary surface, are written such that $\tilde{\phi} = 0$ inside a *closed* surface. Therefore, to test a Kirchhoff code, use a point source inside the closed surface and specify ϕ, $\dot{\phi}$ and ϕ_n analytically on the Kirchhoff surface $f = 0$. If the observer is now put *anywhere* inside $f = 0$ and $\tilde{\phi} \neq 0$, then there is a bug in the code. One must rule out conceptual misunderstanding of the parameters in the formulation first. It is recommended that one should be familiar with the complete details of the derivation of the Kirchhoff formulas to avoid conceptual misunderstanding.

A. S. Lyrintzis and coworkers have may publications on development of Kirchhoff codes.[14-19] The applications have been mainly to helicopter noise prediction. Y. Özyörük and L. N. Long have used Kirchhoff methodology for prediction of the noise of ducted fan engines. They have combined this method with high resolution aerodynamics. Some applications to jet noise prediction have also been attempted by these authors.[17,24]

CONCLUDING REMARKS

The availability of high resolution aerodynamics and turbulence simulation make the Kirchhoff formulas discussed here attractive in aeroacoustics. The mathematics for derivation of these formulas have been under development in the last decade and are well within the reach of modern engineers. The final form of the formulas are simple and relatively easy to apply. The present paper is written as a guide to understanding the mathematical derivation as well as application of these results. The subsonic Kirchhoff formula for a rigid surface has been tested and validated by the author as well as by Myers and Hausmann[25] and by Lyrintzis and Long. The supersonic formula is being coded by Lyrintzis for High speed helicopter rotor noise prediction.

Readers are informed that a new NASA publication by the author includes the expository material presented in a day-long workshop on Kirchhoff formulas in 1995.[26]

ACKNOWLEDGMENTS

The author's work on Kirchhoff formulas has been in collaboration with Dr. M. K. Myers of the George Washington University (JIAFS).

REFERENCES

[1]Ffowcs Williams, J. E., and Hawkings, D. L., "Sound Generated by Turbulence and Surfaces in Arbitrary Motion," *Philosophical Transactions of the Royal Society*, Vol. A264, 1969, pp. 321-342.

[2]Farassat, F., "Introduction to Generalized Functions With Applications in Aerodynamics and Aeroacoustics," NASA TP-3428, May 1994 (corrected April 1996), see Appendix A.

[3]Farassat, F., and Myers, M. K., "Extension of Kirchhoff's Formula to Radiation from Moving Surfaces," *Journal of Sound and Vibration*, 123(3), 1988, pp. 451-460, see Appendix A.

[4]Farassat, F., and Myers, M. K., "The Kirchhoff Formula for a Supersonically Moving Surface," Presented at First Joint CEAS/AIAA Aeroacoustics Conference (16th AIAA Conference), June 1995, Munich, Germany, see Appendix A.

[5]Lighthill, M. J., *Introduction to Fourier Analysis and Generalized Functions*, Camb. Univ. Press, 1964.

[6]Jones, D. S., *The Theory of Generalized Functions*, 2nd ed., Camb. Univ. Press, 1982.

[7]Gel'fand, I. M., and Shilov, G. E., *Generalized Functions*, Vol. 1, *Properties and Operations*, Academic Press, 1964.

[8]Kanwal, R. P., *Generalized Functions - Theory and Technique*, Academic Press, 1983.

[9]Strichartz, R. S., *A Guide to Distribution Theory and Fourier Transforms*, CRC Press, 1994.

[10]Struik, D. J., *Lectures on Classical Differential Geometry*, 2nd ed., Dover Books, 1988.

[11]Kreyszig, E., *Differential Geometry*, Dover Books, 1991.

[12]McConnell, A. J., *Applications of Tensor Analysis*, Dover Books, 1957.

[13]Aris, R., *Vectors, Tensors, and the Basic Equations of Fluid Mechanics*, Dover Books, 1989.

[14]Brentner, K. S., Lyrintzis, A. S., and Koutsavdis, E. K., "A Comparison of Computational Aeroacoustic Prediction Methods for Transonic Rotor Noise," to be presented at the American Helicopter Society 52nd Annual Forum, Washington D. C., June 1996.

[15]Lyrintzis, A. S., "Review: The Use of Kirchhoff's Method in Computational Aeroacoustics," *ASME Journal of Fluids Engineering*, Vol. 116, No. 4, Dec. 1994, pp. 665-676.

[16]Xue, Y., and Lyrintzis, A. S., "Rotating Kirchhoff Formulation for 3-D Transonic BVI Noise for a Hovering Rotor," *AIAA Journal*, Vol. 32, No. 7, July 1994, pp. 1350-1359.

[17]Lyrintzis, A. S., and Mankbadi, R. R., "On the Prediction of the Far-Field Jet Noise Using Kirchhoff's Method," *AIAA Journal*, Vol. 34, No. 2, pp. 413-416.

[18]Wissink, A. M., Lyrintzis, A. S., Biswas R., and Strawn, R. C., "Efficient Helicopter Aerodynamic and Aeroacoustic Predictions on Parallel Computers," AIAA paper 96-0153, Presented at the AIAA 34th Aerospace Science Meeting, Reno, NV, Jan. 1996.

[19]Lyrintzis, A. S., Koutsavdis, E., Berezin, C., Visintainer J., and Pollack, M., "Kirchhoff Acoustic Methodology Validation and Implementation in the Tilt Rotor Aeroacoustic Codes (TRAC)," Presented at the American Helicopter Society Aeromechanics Specialists' Conference, Bridgeport, CT, Oct. 1995.

[20]Özyörük, Y., and Long, L. N., "A New Efficient Algorithm for Computational Aeroacoustics on Parallel Processors," *Journal of Computational Physics*, Vol. 125, No. 1, April 1996, pp. 135-149.

[21]Özyörük, Y., and Long, L. N., "Computation of Sound Radiating from Engine Inlets," *AIAA Journal*, Vol. 34, No. 5, May 1996.

[22]Özyörük, Y., and Long, L. N., "Progress in Time-Domain Calculations of Ducted Fan Noise: Multigrid Acceleration of a High-Resolution CAA Scheme," AIAA Paper 96-1771, 2nd AIAA/CEAS Aeroacoustics Conference, State College, PA, May 1996.

[23]Özyörük, Y., and Long, L. N., "A Time-Domain Implementation of Surface Acoustic Impedance Condition With and Without Flow," AIAA Paper 96-1663, 2nd AIAA/CEAS Aeroacoustics Conference, State College, PA, May 1996.

[24]Chyczewski, T. S., and Long, L. N., "Direct Simulations of Supersonic Jet Noise on Parallel Computers," AIAA Paper 96-1730, 2nd AIAA/CEAS Aeroacoustics Conference, State College, PA, May 1996.

[25]Myers, M. K., and Hausmann, J. S., "On the Application of the Kirchhoff Formula for Moving Surfaces," *Journal of Sound and Vibration*, 139(1), 1990, pp. 174-178.

[26]Farassat, F., "The Kirchhoff Formulas for Moving Surfaces in Aeroacoustics - The Subsonic and Supersonic Cases," NASA Technical Memorandum, to be published, 1996.

Appendix A

The Primary References for this Paper

NASA Technical Paper 3428

Introduction to Generalized Functions With Applications in Aerodynamics and Aeroacoustics

F. Farassat
Langley Research Center • Hampton, Virginia

Corrected Copy (April 1996)

Download from Langley Technical Report Server
ftp://techreports.larc.nasa.gov/pub/techreports/larc/94/tp3428.ps.Z

National Aeronautics and Space Administration
Langley Research Center • Hampton, Virginia 23681-0001

May 1994

The Kirchhoff Formulas for Moving Surfaces in Aeroacoustics—The Subsonic and Supersonic Cases

by

F. Farassat

Aeroacoustics Branch
Fluid Mechanics and Acoustics Division
Langley Research Center

Based on Lectures Delivered in Workshop on Kirchhoff Formulas for Moving Surfaces, NASA Langley Research Center, February 15, 1995

To be published as a NASA Technical Memorandum in 1996

Journal of Sound and Vibration (1988) **123**(3), 451–460

EXTENSION OF KIRCHHOFF'S FORMULA TO RADIATION FROM MOVING SURFACES

F. FARASSAT

NASA-Langley Research Center, Hampton, Virginia 23665, *U.S.A.*

AND

M. K. MYERS

Joint Institute for Advancement of Flight Sciences, The George Washington University, Hampton, Virginia 23665, *U.S.A.*

(*Received* 5 *May* 1987, *and in revised form* 15 *September* 1987)

Kirchhoff's formula for radiation from a closed surface has been used recently for prediction of the noise of high speed rotors and propellers. Because the closed surface on which the boundary data are prescribed in these cases is in motion, an extension of Kirchhoff's formula to this condition is required. In this paper such a formula, obtained originally by Morgans for the interior problem, is derived for regions exterior to surfaces moving at speeds below the wave propagation speed, by making use of some results of generalized function theory. It is shown that the usual Kirchhoff formula is a special case of the main result of the paper. The general result applies to a deformable surface. However, the special form it assumes for a rigid surface in motion is also noted. Some possible areas of application of the formula to problems of current interest in aeroacoustics are discussed.

1. INTRODUCTION

Kirchhoff's formula, published in 1882, is used in the theory of diffraction of light and in other electromagnetic problems [1, 2]. It also has many applications to problems of wave propagation in acoustics [3]. One of the novel uses of this formula was proposed by Hawkings for predicting the noise of high speed propellers and helicopter rotors [4]. His idea involves surrounding the rotating blades by a closed surface S which moves with the forward speed of the machine. Inside this surface, non-linear aerodynamic calculations are carried out which give the blade loads and the pressure history and its spatial and temporal derivatives on the surrounding surface S. In the exterior of this surface, it is proposed that a formula similar to Kirchhoff's be used to calculate propagation of sound in terms of these surface values. This necessitates extension of the Kirchhoff formula to apply to moving surfaces. In 1930, such an extension was derived for the interior problem by Morgans [5]. His analysis was lengthy and somewhat complicated and, in addition, it does not seem to be well known among acousticians. For these reasons, a modern derivation of a generalized Kirchhoff formula applicable to moving surfaces is presented here. It is very likely that specialized versions of this formula have been re-derived by many researchers in the context of specific applications. One such case known to the authors is discussed in the last section of the current paper.

In the following section the method used in the derivation of the main result is illustrated by deriving the Kirchhoff formula for radiation into the region exterior to a stationary

0022-460X/88/120451+10 $03.00/0 © 1988 Academic Press Limited

surface S. The method involves application of the wave operator to a function Φ which is set equal to zero outside the domain of interest. The function Φ is thus discontinuous across the surface S. The derivatives in the wave operator are considered as generalized derivatives [6–9] which are defined everywhere. The resulting expression then contains terms which involve the jumps in Φ and its derivatives multiplied by Dirac delta functions whose supports are on S. These terms can be viewed as source terms for a wave equation which is valid in the entire unbounded space. Kirchhoff's formula is then derived by using the Green function of the wave equation for unbounded space.

In the main section of this paper, this method is extended to a deformable piecewise smooth moving surface. It will be observed that essentially no major difficulties arise in this case. One thus avoids the conventional approach which can become complicated in the case of moving surfaces. The resulting general Kirchhoff formula is then written for piecewise smooth rigid surfaces. It is also shown that the usual formula for a stationary surface is a special case of the general result presented here.

In this paper the wave propagation problem is treated as an acoustic problem and the terminology of acoustics is used. The main result is of course applicable to many other wave propagation problems. Immediate applications to the problem of the prediction of the noise of high speed propellers and rotors are expected.

2. EXAMPLE OF THE MATHEMATICAL APPROACH

In this section the mathematical method of deriving the main result is illustrated by utilizing it to obtain the Kirchhoff formula for a stationary surface [1–3]. Consider the closed and bounded smooth surface S described by $f(\mathbf{x})=0$ such that $f>0$ in the exterior of this surface. Assume that Φ and its first derivatives are continuous in $f>0$, that Φ satisfies the wave equation

$$(1/c^2)\,\partial^2\Phi/\partial t^2-\nabla^2\Phi\equiv\Box^2\,\Phi=0 \tag{1}$$

in the exterior of surface S, and that Φ, Φ_t and Φ_n are given on S for $t\in(-\infty,\infty)$. Extend Φ to the interior of $S(f<0)$ by assuming that $\Phi=0$ inside S. To reduce confusion between Φ and this extended function, the latter function $\tilde{\Phi}(\mathbf{x},t)$ is defined as follows:

$$\tilde{\Phi}(\mathbf{x},t)=\begin{cases}\Phi(\mathbf{x},t) & f>0\ (\text{exterior of } S)\\ 0 & f<0\ (\text{interior of } S)\end{cases}. \tag{2}$$

The function $\tilde{\Phi}$ is a discontinuous function whose derivatives do not exist on $f=0$. One can, however, define generalized derivatives for such a function [6–9]. *In this paper operators involving generalized derivatives will be denoted by a bar over the operator symbol.* It follows from the definition of $\tilde{\Phi}$ that wherever ordinary derivatives of $\tilde{\Phi}$ exist (i.e., interior or exterior to S) one has

$$\Box^2\,\tilde{\Phi}=0. \tag{3}$$

However, one can show, as is done below, that

$$\bar{\Box}^2\,\tilde{\Phi}=(1/c^2)\,\bar{\partial}^2\tilde{\Phi}/\partial t^2-\bar{\nabla}^2\tilde{\Phi}\neq 0. \tag{4}$$

It will be seen that what appears on the right side of equation (4) leads to the Kirchhoff formula. For the reader who is not familiar with generalized function theory, it is mentioned that one requires considerable conceptual development in going from equation (3) to equation (4). Examples of applications given in references [7] and [8] may help in understanding the following steps.

One can always define the surface $f=0$ in such a way that $|\nabla f|=1$ on this surface. This is done by taking $\mathrm{d}f=\mathrm{d}n$ where $\mathrm{d}n$ is distance from the surface $f=0$ along its local

normal. With this definition one has $\nabla f = \mathbf{n}$, where $\mathbf{n}$ is the local unit normal pointing into the exterior region. Then, using generalized derivatives [8], one can write at once

$$\frac{\bar{\partial}\tilde{\Phi}}{\partial t} = \frac{\partial\tilde{\Phi}}{\partial t} + \tilde{\Phi}\frac{\partial f}{\partial t}\delta(f) = \frac{\partial\tilde{\Phi}}{\partial t}, \qquad \frac{\bar{\partial}^2\tilde{\Phi}}{\partial t^2} = \frac{\partial^2\tilde{\Phi}}{\partial t^2}, \tag{5a, b}$$

$$\bar{\nabla}\tilde{\Phi} = \nabla\tilde{\Phi} + \Phi\mathbf{n}\,\delta(f), \qquad \bar{\nabla}^2\tilde{\Phi} = \nabla^2\tilde{\Phi} + \Phi_n\,\delta(f) + \bar{\nabla}\cdot[\Phi\,\mathbf{n}\,\delta(f)], \tag{5c, d}$$

where in equation (5c) the function Φ on the right side is defined as

$$\Phi \equiv \lim_{f\to 0+} \Phi(\mathbf{x}, t). \tag{6}$$

The function Φ_n in equation (5d) is the normal derivative of Φ, and is defined similarly. The Dirac delta function is denoted $\delta(f)$. From equation (5) one obtains

$$\bar{\Box}^2\,\tilde{\Phi} = \Box^2\,\tilde{\Phi} - \Phi_n\,\delta(f) - \bar{\nabla}\cdot[\Phi\,\mathbf{n}\,\delta(f)] = -\Phi_n\,\delta(f) - \bar{\nabla}\cdot[\Phi\,\mathbf{n}\,\delta(f)]. \tag{7}$$

Here, equation (3) is used in the last step. This completes the determination of the right side of equation (4).

Equation (7) is valid in the entire unbounded space. One can now use the Green function for the wave equation in unbounded space, $\delta(g)/4\pi r$, where $g = \tau - t + r/c$ and $r = |\mathbf{x} - \mathbf{y}|$. The space–time variables of the observer and source are denoted $(\mathbf{x}, t)$ and $(\mathbf{y}, \tau)$, respectively. The speed of sound is c. Equation (7) then yields

$$4\pi\tilde{\Phi}(\mathbf{x}, t) = -\int \frac{\Phi_n}{r}\delta(f)\,\delta(g)\,\mathrm{d}\mathbf{y}\,\mathrm{d}\tau - \bar{\nabla}\cdot\int \frac{\Phi\,\mathbf{n}}{r}\delta(f)\,\delta(g)\,\mathrm{d}\mathbf{y}\,\mathrm{d}\tau. \tag{8}$$

The space integrals in equation (8) are over the entire unbounded space and the time integral is over $(-\infty, t]$. The divergence operator on the right acts on the variable $\mathbf{x}$. Use the fact that the volume element $\mathrm{d}\mathbf{y} = \mathrm{d}f\,\mathrm{d}S$, where $\mathrm{d}S$ is the element of area of the surface $S: f = 0$. Then let $\tau \to g$ noting that the Jacobian of the transformation $|\partial\tau/\partial g| = |\partial g/\partial\tau|^{-1}$ is unity. Integration over f, by virtue of the delta function $\delta(f)$, restricts the expressions to $f = 0$. Subsequent integration over g restricts the expressions to $g = 0$, which introduces the retarded time. Equation (8) thus becomes

$$4\pi\tilde{\Phi}(\mathbf{x}, t) = -\int_{f=0} \frac{[\Phi_n]}{r}\,\mathrm{d}S - \bar{\nabla}\cdot\int_{f=0} \frac{[\Phi]}{r}\,\mathbf{n}\,\mathrm{d}S. \tag{9}$$

Here the square backet stands for evaluation of the functions at the retarded time: i.e., $[\Phi] \equiv \Phi(\mathbf{y}, t - r/c)$.

Taking the gradient operator inside the second integral of equation (9) and collecting terms of $O(1/r)$ and $O(1/r^2)$, one gets

$$\begin{aligned} 4\pi\tilde{\Phi}(\mathbf{x}, t) &= \begin{Bmatrix} 4\pi\Phi(\mathbf{x}, t) & f > 0 \\ 0 & f < 0 \end{Bmatrix} \\ &= \int_{f=0} \frac{[c^{-1}\Phi_\tau\cos\theta - \Phi_n]}{r}\,\mathrm{d}S + \int_{f=0} \frac{[\Phi]\cos\theta}{r^2}\,\mathrm{d}S. \end{aligned} \tag{10}$$

Here $\Phi_\tau = \partial\Phi(\mathbf{y}, \tau)/\partial\tau$ and θ is the angle between $\mathbf{n}$ (pointing into the exterior region) and the radiation direction $\mathbf{r} = \mathbf{x} - \mathbf{y}$. For the exterior region $f > 0$, this is Kirchhoff's formula for a stationary surface S. The present method automatically shows that for the observer inside the surface S the integrals in Kirchhoff's formula yield a zero (null) field. This means that Φ, Φ_n and Φ_τ are not independent on the surface S. Equation (10) is an identity which may be utilized in various ways. As it stands it may be considered as an integral representation of Φ at points exterior to S in terms of surface quantities.

Another interpretation follows if the observer point $\mathbf{x}$ is taken on S itself; in that case, equation (10) becomes an integral equation governing Φ on S. This latter interpretation is the basis of modern boundary element methods. It is clear that equation (10) remains valid for a piecewise smooth surface S.

It is noted that in the usual applications of equation (10) Φ is taken as a complex harmonic function of time so that the temporal part of Φ disappears in equation (10); the resulting Kirchhoff formula pertains to the complex amplitude of Φ [1–3]. The amplitude satisfies Helmholtz' equation. In this case one could begin the above procedure from a Helmholtz equation rather than from the wave equation as is done above.

3. THE GENERAL KIRCHHOFF FORMULA

In this section, the Kirchhoff formula for moving surfaces will be derived. Let $f(\mathbf{x}, t) = 0$ describe the moving surface S which is assumed to be piecewise smooth. The function f is defined as before such that $f > 0$ outside S and $\nabla f = \mathbf{n}$ on $f = 0$. The function Φ and its first derivatives are assumed to be continuous, and Φ satisfies equation (1). This function is again extended to $\tilde{\Phi}$ by equation (2) so that equation (3) is satisfied both inside and outside S. The terms on the right side of equation (4) are found by the same technique as presented above.

Taking the generalized derivative of $\tilde{\Phi}$ with respect to time gives

$$\frac{\bar{\partial}\tilde{\Phi}}{\partial t} = \frac{\partial \tilde{\Phi}}{\partial t} + \Phi \frac{\partial f}{\partial t}\,\delta(f) = \frac{\partial \tilde{\Phi}}{\partial t} - \Phi v_n\,\delta(f), \tag{11}$$

where $v_n = -\partial f/\partial t$ is the local normal velocity of S with respect to the undisturbed medium. Differentiating both sides of equation (11) once more yields

$$\frac{\bar{\partial}^2\tilde{\Phi}}{\partial t^2} = \frac{\partial^2 \tilde{\Phi}}{\partial t^2} - \Phi_{t(x)} v_n\,\delta(f) - \frac{\bar{\partial}}{\partial t}[\Phi\, v_n\,\delta(f)], \tag{12}$$

where $\Phi_{t(x)} = \partial\Phi/\partial t|_{\mathbf{x}}$. The generalized Laplacian of Φ is given by equation (5d) as before. From this and equation (12), one obtains

$$\bar{\Box}^2\,\tilde{\Phi} = -\left(\Phi_n + \frac{1}{c} M_n \Phi_{t(x)}\right)\delta(f) - \frac{1}{c}\frac{\bar{\partial}}{\partial t}[M_n\,\Phi\,\delta(f)] - \bar{\nabla}\cdot[\Phi\,\mathbf{n}\,\delta(f)], \tag{13}$$

where $M_n = v_n/c$ is the local normal Mach number on S. In the following, partial derivatives with respect to time holding different sets of space variables fixed will appear. The notation introduced above (e.g., $\Phi_{t(x)}$) will be maintained wherever necessary in order to prevent confusion. The source terms in equation (13) can be written in other forms by performing the temporal and spatial derivatives in the second and third terms, respectively. The above form, however, seems to require the fewest algebraic manipulations in the following analysis.

Upon use of the Green function of the wave operator in unbounded space, equation (13) gives

$$4\pi\tilde{\Phi}(\mathbf{x}, t) = -\int \frac{1}{r}\left(\Phi_n + \frac{1}{c} M_n \Phi_{\tau(y)}\right)\delta(f)\,\delta(g)\,\mathrm{d}\mathbf{y}\,\mathrm{d}\tau - \frac{1}{c}\frac{\bar{\partial}}{\partial t}\int \frac{1}{r} M_n \Phi\,\delta(f)\,\delta(g)\,\mathrm{d}\mathbf{y}\,\mathrm{d}\tau$$
$$-\bar{\nabla}\cdot\int \frac{1}{r}\,\Phi\,\mathbf{n}\,\delta(f)\,\delta(g)\,\mathrm{d}\mathbf{y}\,\mathrm{d}\tau, \tag{14}$$

where $\Phi_{\tau(y)} = \partial\Phi(\mathbf{y}, \tau)/\partial\tau$.

If the spatial variables $\mathbf{y}$ are transformed to Lagrangian variables $\boldsymbol{\eta}$, and if the transformation $\tau \to g$ is employed and the delta functions integrated out, then equation (14) can immediately be written in the form of equation (5.3) of reference [10]. Such an approach leaves the divergence and the time derivative operators outside the integrals, however, which renders the resulting formula unsuitable for numerical application. In the current paper equation (14) will be manipulated differently to lead, as will be seen, to a more practically useful result.

Before interpreting the integrals in equation (14), the following relation is used to convert the space derivatives in the last integral to a time derivative:

$$\frac{\bar{\partial}}{\partial x_i}\left[\frac{\delta(g)}{r}\right] = -\frac{1}{c}\frac{\bar{\partial}}{\partial t}\left[\frac{\hat{r}_i\,\delta(g)}{r}\right] - \frac{\hat{r}_i\,\delta(g)}{r^2}, \tag{15}$$

where $\hat{\mathbf{r}} = (\mathbf{x}-\mathbf{y})/r$ is the unit radiation direction vector. Note that in this relation the source variables $(\mathbf{y}, \tau)$ are held fixed. Equation (14) can now be written as

$$4\pi\tilde{\Phi}(\mathbf{x}, t) = -\int \frac{1}{r}\left(\Phi_n + \frac{1}{c}M_n\Phi_{\tau(y)}\right)\delta(f)\,\delta(g)\,\mathrm{d}\mathbf{y}\,\mathrm{d}\tau + \int \frac{1}{r^2}\Phi\cos\theta\,\delta(f)\,\delta(g)\,\mathrm{d}\mathbf{y}\,\mathrm{d}\tau$$
$$+\frac{1}{c}\frac{\bar{\partial}}{\partial t}\int \frac{1}{r}(\cos\theta - M_n)\,\Phi\,\delta(f)\,\delta(g)\,\mathrm{d}\mathbf{y}\,\mathrm{d}\tau. \tag{16}$$

There are two types of integrals in equation (16), which will be denoted

$$I_1 = \int Q_1\,\delta(f)\,\delta(g)\,\mathrm{d}\mathbf{y}\,\mathrm{d}\tau, \qquad I_2 = \frac{1}{c}\frac{\bar{\partial}}{\partial t}\int Q_2\,\delta(f)\,\delta(g)\,\mathrm{d}\mathbf{y}\,\mathrm{d}\tau. \tag{17, 18}$$

The technique of evaluation of these integrals will be given below.

Although in many applications of the Kirchhoff formula in acoustics the surface S is taken as rigid, for completeness S is here assumed to be deformable. Let S be described by the surface co-ordinates (u^1, u^2) and assume $u^3 = f$. This mapping is required only in the vicinity of $f = 0$. Let the mapping $(u^1, u^2, u^3) \to \mathbf{y}$ be a differentiable function of time τ. Denote the determinant of the coefficients of the first fundamental form on S by $g_{(2)} = g_{11}g_{22} - g_{12}^2$, where the $g_{ij}(i, j = 1, 2)$ are the metric tensor components. Then $g_{(2)}$ is a function of time τ in addition to (u^1, u^2). For example, consider a sphere of radius $R(\tau)$ whose center is moving at speed $\mathbf{U}(\tau)$. Let (u^1, u^2) be the spherical surface co-ordinates on this sphere as shown in Figure 1. Then if at $\tau = 0$ the center of the sphere is at the origin of the $\mathbf{y}$-frame, it follows that

$$y_1 = y_1^0(\tau) + [u^3 + R(\tau)]\cos u^1 \sin u^2,$$
$$y_2 = y_2^0(\tau) + [u^3 + R(\tau)]\sin u^1 \sin u^2, \qquad y_3 = y_3^0(\tau) + [u^3 + R(\tau)]\cos u^2, \tag{19}$$

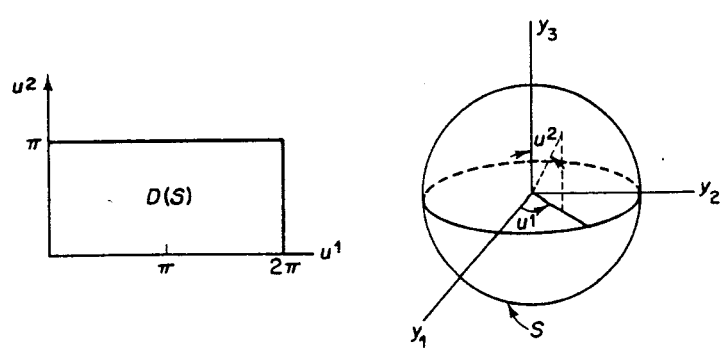

Figure 1. The mapping $\mathbf{y} \to (u^1, u^2)$. Domain $D(S)$ is independent of time.

where

$$\mathbf{y}^0(\tau) = \int_0^\tau \mathbf{U}(\tau')\,\mathrm{d}\tau'. \tag{20}$$

Also, it is seen that on S

$$\sqrt{g_{(2)}} = R^2(\tau)\sin u^2. \tag{21}$$

To evaluate I_1, the following successive transformations are carried out: $\mathbf{y} \to (u^1, u^2, u^3)$ and then $\tau \to g$. The Jacobians of the transformations are 1 and $1/(1-M_r)$, respectively, where $M_r = \mathbf{v}\cdot\hat{\mathbf{r}}/c$. Here $\mathbf{v} = \partial\mathbf{y}/\partial\tau$, holding (u^1, u^2, u^3) fixed. After the first transformation and integration with respect to f (i.e., u^3), I_1 is given by

$$I_1 = \int_{-\infty}^{t}\int_{D(S)} Q_1(u^1, u^2, 0, \tau)\,\delta(g)\sqrt{g_{(2)}}\,\mathrm{d}u^1\,\mathrm{d}u^2\,\mathrm{d}\tau, \tag{22}$$

where $D(S)$ is the domain of S in (u^1, u^2)-space. Note that even if S is deformable, the limits of the inner integrals can be made time independent and are assumed so here (see Figure 1). The deformation of S appears in the variation of $g_{(2)}$ with τ. The second transformation $\tau \to g$ and the subsequent integration with respect to g restrict the integrand to $g = 0$ and yield

$$I_1 = \int_{D(S)} \left[\frac{Q_1\sqrt{g_{(2)}}}{1-M_r}\right]_{g=0} \mathrm{d}u^1\,\mathrm{d}u^2. \tag{23}$$

The interpretation of the integrand is as follows. If the relation $g = 0$ is explicitly written (remembering that $u^3 = f = 0$ also in the integrand)

$$g = \tau - t + |\mathbf{x} - \mathbf{y}(u^1, u^2, 0, \tau)|/c = 0, \tag{24}$$

then the solution in source time, τ^*, of this equation is the emission time which must be used in the integrand of equation (23). Note that since $|\mathbf{v}| < c$ by assumption, equation (24) has a unique solution. Equation (23) will thus be written as

$$I_1 = \int_{D(S)} \left[\frac{Q_1\sqrt{g_{(2)}}}{1-M_r}\right]_{\tau^*} \mathrm{d}u^1\,\mathrm{d}u^2. \tag{25}$$

Since $D(S)$ is independent of t, I_2 follows immediately from equation (18) as

$$I_2 = \frac{1}{c}\int_{D(S)} \frac{\partial}{\partial t}\left[\frac{Q_2\sqrt{g_{(2)}}}{1-M_r}\right]_{\tau^*} \mathrm{d}u^1\,\mathrm{d}u^2 = \frac{1}{c}\int_{D(S)} \left[\frac{1}{1-M_r}\frac{\partial}{\partial\tau}\left\{\frac{Q_2\sqrt{g_{(2)}}}{1-M_r}\right\}\right]_{\tau^*} \mathrm{d}u^1\,\mathrm{d}u^2, \tag{26}$$

where the relation $\partial/\partial t = (1-M_r)^{-1}\partial/\partial\tau|_{\mathbf{u}}$, obtained from equation (24), is used in the last expression. Note carefully that in taking $\partial/\partial\tau$ the variables u^1 and u^2 are kept fixed.

After using the results of equations (25) and (26), equation (16) can be written as

$$\begin{aligned} 4\pi\tilde{\Phi}(\mathbf{x}, t) = &-\int_{D(S)} \left[\frac{(\Phi_n + c^{-1}M_n\Phi_{\tau(y)})\sqrt{g_{(2)}}}{r(1-M_r)}\right]_{\tau^*} \mathrm{d}u^1\,\mathrm{d}u^2 \\ &+\int_{D(S)} \left[\frac{\Phi\sqrt{g_{(2)}}\cos\theta}{r^2(1-M_r)}\right]_{\tau^*} \mathrm{d}u^1\,\mathrm{d}u^2 \\ &+\frac{1}{c}\int_{D(S)} \left[\frac{1}{1-M_r}\frac{\partial}{\partial\tau}\left\{\frac{(\cos\theta - M_n)\Phi\sqrt{g_{(2)}}}{r(1-M_r)}\right\}\right]_{\tau^*} \mathrm{d}u^1\,\mathrm{d}u^2. \end{aligned} \tag{27}$$

This result is equivalent to that of Morgans [5] and is referred to here as the general Kirchhoff formula. The notation of the present paper, however, differs from Morgans', who addressed the interior problem.

There is a somewhat subtle point which should be made, however, about the result given in reference [5]. The quantity $[\sqrt{g_{(2)}}]_{\tau^*}\,\mathrm{d}u^1\,\mathrm{d}u^2$ is there written $\mathrm{d}S$, but this is not the element of area of the physical surface S which is defined by fixing τ in $f(\mathbf{y}, \tau)=0$. That element is $\sqrt{g_{(2)}}\,\mathrm{d}u^1\,\mathrm{d}u^2$. The difference arises because as S deforms in space any element specified by (u^1, u^2) has different emission times τ^* for a fixed $\mathbf{x}$ and t. Corresponding to each τ^* the surface S has a different shape. Although the main result of Morgans is correct if interpreted as in the present paper, in some of his elementary examples there is an ambiguity in the meaning of $\mathrm{d}S$. It should be noted that Morgans' result (27) is claimed to be erroneous by the authors of reference [10]. However, they do not specifically point out the nature of the error. The modern derivation given above indicates that Morgans' formula is, in fact, correct, a conclusion which was made also by Munro [11].

Finally, it must be mentioned that the moving surface S in the above analysis can be unbounded provided that it divides the space into interior and exterior parts. An open bounded or unbounded surface can be considered as the limiting case of a closed surface of infinitely small thickness to which the Kirchhoff formula can be applied.

If S is stationary, then M_n and M_r are zero and $g_{(2)}$ is time independent. Also τ^* is simply $t-r/c$. Under these conditions, equation (27), reduces to the Kirchhoff formula for stationary surfaces, equation (10).

3.1. ALTERNATE FORM FOR APPLICATIONS

Because equation (27) contains $\Phi_{\tau(y)}$ and also a time derivative of a complicated function in the last integrand, it is still not in a form which is readily applied for numerical analysis. In order to obtain a result which is practically useful it is essential that the time derivative in the integrand of the last term be evaluated analytically and the entire result written in terms of geometric and kinematic quantities which are available or can be readily measured. To this end the following relations will be used:

$$\frac{1}{c}\frac{\partial r}{\partial \tau}=\frac{1}{c}\frac{\partial}{\partial \tau}|\mathbf{x}-\mathbf{y}(u^1, u^2, 0, \tau)|=-M_r, \qquad \frac{1}{c}\frac{\partial M_r}{\partial \tau}=\frac{1}{c}\dot{\mathbf{M}}\cdot\hat{\mathbf{r}}+\frac{1}{r}(M_r^2-M^2), \tag{28a, b}$$

$$\frac{1}{c}\frac{\partial \cos\theta}{\partial \tau}=\frac{1}{c}\dot{\mathbf{n}}\cdot\hat{\mathbf{r}}+\frac{1}{r}(M_r\cos\theta-M_n), \qquad \frac{1}{c}\frac{\partial M_n}{\partial \tau}=\frac{1}{c}(\dot{\mathbf{M}}\cdot\mathbf{n}+\mathbf{M}\cdot\dot{\mathbf{n}}). \tag{28c, d}$$

Here the dot over $\mathbf{M}$ and $\mathbf{n}$ denotes the source time derivative with (u^1, u^2) kept fixed. In addition, the following definitions are introduced:

$$\dot{M}_r=\dot{\mathbf{M}}\cdot\hat{\mathbf{r}}, \qquad \dot{n}_r=\dot{\mathbf{n}}\cdot\hat{\mathbf{r}}, \qquad \dot{M}_n=\dot{\mathbf{M}}\cdot\mathbf{n}, \tag{29a, b, c}$$

$$\dot{n}_M=\dot{\mathbf{n}}\cdot\mathbf{M}, \qquad (1/\sqrt{g_{(2)}})\partial\sqrt{g_{(2)}}/\partial\tau=\dot{\sigma}. \tag{29d, e}$$

Note that in the last integral of equation (27), a new time rate of change of Φ will appear when (u^1, u^2) is kept fixed. This is denoted $\dot{\Phi}$. The relation between $\Phi_{\tau(y)}$ and $\dot{\Phi}$ is obtained as follows:

$$\dot{\Phi}=\left\{\frac{\partial}{\partial\tau}\Phi[\mathbf{y}(\mathbf{u}, \tau), \tau]\right\}_{u_3=0}=\left\{\frac{\partial\Phi}{\partial y_i}\frac{\partial y_i}{\partial\tau}+\frac{\partial\Phi}{\partial\tau}\right\}_{u_3=0}$$
$$=\{\mathbf{v}\cdot\nabla\Phi+\Phi_{\tau(y)}\}_{u_3=0}=cM_n\Phi_n+c\mathbf{M}_t\cdot\nabla_2\Phi+\Phi_{\tau(y)}. \tag{30}$$

Here $\mathbf{u}=(u^1, u^2, u^3)$, $\mathbf{v}=\partial\mathbf{y}/\partial\tau|_{\mathbf{u}}$ and $\mathbf{M}_t$ is the tangential component of the Mach number vector $\mathbf{M}=\mathbf{v}/c$ on S. Also ∇_2 stands for the surface gradient operator.

Equation (27) can now be written as

$$4\pi\tilde{\Phi}(\mathbf{x}, t)=\int_{D(S)}\left[\frac{E_1\sqrt{g_{(2)}}}{r(1-M_r)}\right]_{\tau^*}\mathrm{d}u^1\,\mathrm{d}u^2+\int_{D(S)}\left[\frac{\Phi E_2\sqrt{g_{(2)}}}{r^2(1-M_r)}\right]_{\tau^*}\mathrm{d}u^1\,\mathrm{d}u^2, \tag{31}$$

where the expressions E_1 and E_2 are

$$E_1 = (M_n^2 - 1)\Phi_n + M_n \mathbf{M}_t \cdot \nabla_2 \Phi - c^{-1} M_n \dot{\Phi} + \frac{c^{-1}}{1 - M_r}[(\dot{n}_r - \dot{M}_n - \dot{n}_M)\Phi$$

$$+ (\cos\theta - M_n)\dot{\Phi} + (\cos\theta - M_n)\Phi\dot{\sigma}] + \frac{c^{-1}}{(1 - M_r)^2}[\dot{M}_r(\cos\theta - M_n)\Phi], \tag{32a}$$

$$E_2 = \cos\theta + \frac{1}{1 - M_r}[2M_r \cos\theta - M_n M_r - M_n] + \frac{1}{(1 - M_r)^2}[(\cos\theta - M_n)(M_r^2 - M^2)]. \tag{32b}$$

If the surface S is assumed rigid, then $g_{(2)}$ is independent of τ and

$$\dot{\mathbf{n}} = \boldsymbol{\omega} \times \mathbf{n}, \tag{33}$$

where $\boldsymbol{\omega}$ is the angular velocity of S. One can now write $\mathrm{d}S = \sqrt{g_{(2)}}\,\mathrm{d}u^1\,\mathrm{d}u^2$ for the element of area of S. Equation (31) can thus be written for a rigid surface as

$$4\pi\tilde{\Phi}(\mathbf{x}, t) = \int_S \left[\frac{E_1}{r(1 - M_r)}\right]_{\tau^*} \mathrm{d}S + \int_S \left[\frac{\Phi E_2}{r^2(1 - M_r)}\right]_{\tau^*} \mathrm{d}S, \tag{34}$$

where E_1 and E_2 are again given by equation (32) with equation (33) used where needed. The general Kirchhoff formula of equations (31) and (34) is now in a form which is suitable for practical applications. These results appear not to have been published elsewhere. Once more it can be checked that the Kirchhoff formula for stationary surfaces, equation (10), can be obtained from these equations.

3.2. REMARKS ON EXTENSION TO SUPERSONIC MOTION

A more general Kirchhoff formula can be derived which is valid for deformable, piecewise smooth surfaces in arbitrary motion (subsonic or supersonic). The derivation of this result is very lengthy and complicated, and it will not be written out here. It relies on the solution of the following wave equation given by the authors [12]:

$$\bar{\Box}^2 \Phi = \bar{\nabla}_4 \cdot [\mathbf{Q}|\nabla f|\,\delta(f)]. \tag{35}$$

In this equation $\nabla_4 = (\nabla, c^{-1}\partial/\partial t)$ and $\mathbf{Q}$ is a 4-vector. Note that $|\nabla f| = 1$ in the present paper. Equation (13) can be written as

$$\bar{\Box}^2 \tilde{\Phi} = -\left(\Phi_n + \frac{1}{c} M_n \Phi_{t(x)}\right)\delta(f) - \bar{\nabla}_4 \cdot [\mathbf{Q}\,\delta(f)], \tag{36}$$

where $\mathbf{Q} = \Phi(\mathbf{n}, M_n)$. Now the Green function of the wave equation can be applied to find $\tilde{\Phi}$ by utilizing the result of reference [12] for the second term of equation (36). The resulting Kirchhoff formula is more general than the formula presented here. However, the various forms of the general Kirchhoff formula of the current paper appear to be adequate for present applications in acoustics.

4. APPLICATIONS IN ACOUSTICS

As mentioned in the introduction, application of the Kirchhoff formula has been proposed for rotor noise prediction. Attempts have also been made by Forsyth and Korkan [13] to use this formula for high speed propeller noise calculation. These authors have proposed using the Kirchhoff formula for a stationary surface which, as shown above, is very different from the general Kirchhoff formula. The surface S in the work of Forsyth and Korkan is taken as a finite cylinder, fixed with respect to the propeller, with its axis along that of the propeller. This surface is therefore in motion with respect to the unbounded acoustic medium, and the general Kirchhoff formula must be applied to S.

One of the interesting applications of the general Kirchhoff formula may be in the prediction of the noise of high bypass ratio turbofans. These propulsors are currently favored in aircraft designs because of their high efficiency. By using a cylindrical surface S with its axis along the fan axis and its ends at the fan inlet and exhaust (see Figure 2) the main result of the present paper can be applied to predict the radiation pattern. There are several sophisticated turbomachinery aerodynamics codes which can supply the needed input data to the Kirchhoff formula.

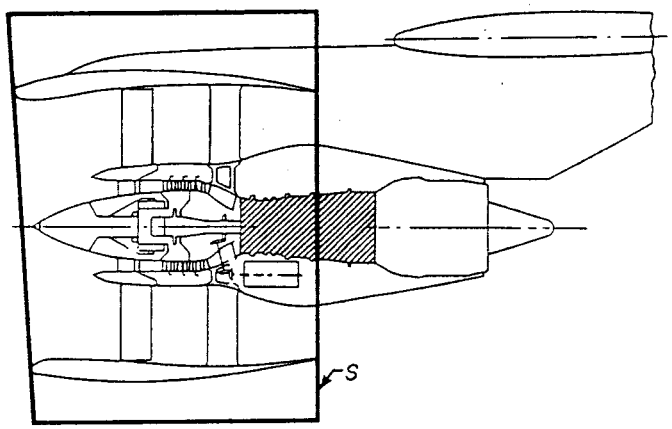

Figure 2. Illustrating a surface S appropriate for turbofan noise analysis.

Lyrintzis and George have developed a specialized Kirchhoff formula to calculate the far field noise from a single helicopter blade interacting with a vortex [14]. Their formula applies to uniform motion of a rigid surface and is derived by using Green's theorem. It is equivalent, in their special case, to the general Kirchhoff formula derived here, equation (34).

ACKNOWLEDGMENTS

The authors are indebted to Professor H. S. Ribner for numerous suggestions which greatly improved the presentation of the foregoing results. Thanks are also due to Professsor A. R. George for his useful comments. The work of the second author was supported by NASA under Cooperative Agreement NCCl-14.

REFERENCES

1. D. S. JONES 1964 *The Theory of Electromagnetism.* Oxford: Pergamon Press.
2. J. A. STRATTON 1941 *Electromagnetic Theory.* New York: McGraw-Hill.
3. A. D. PIERCE 1981 *Acoustics—An Introduction to Its Physical Principles and Applications.* New York: McGraw-Hill.
4. D. L. HAWKINGS 1979 *Westland Research Paper* 599. Noise generation by transonic open rotors.
5. W. R. MORGANS 1930 *Philosophical Magazine,* **9**, 141–161. The Kirchhoff formula extended to a moving surface.
6. I. M. GEL'FAND and G. E. SHILOV 1964 *Generalized Functions, Volume* **1**, *Properties and Operations.* New York: Academic Press.
7. R.P. KANWAL 1983 *Generalized Functions—Theory and Technique.* New York: Academic Press.
8. F. FARASSAT 1977 *Journal of Sound and Vibration* **55**, 165–193. Discontinuities in aerodynamics and aeroacoustics: the concept and applications of generalized derivatives.
9. D. S. JONES 1966 *Generalized Functions.* London: McGraw-Hill.
10. J. E. FFOWCS WILLIAMS and D. L. HAWKINGS 1969 *Philosophical Transactions of the Royal Society* **264A**, 321–342. Sound generation by turbulence and surfaces in arbitrary motion.

11. D. H. MUNRO 1980 *Ph.D. Dissertation, Massachusetts Institute of Technology*. The production of sound by moving objects.
12. F. FARASSAT and M. K. MYERS 1986 *First IMACS International Symposium on Computational Acoustics, Yale University*, 6–8 *August*. The moving boundary problem for the wave equation: theory and application.
13. D. W. FORSYTH and K. D. KORKAN 1987 *AIAA 25th Aerospace Sciences Meeting*, 12–15 *January, Reno, Nevada, AIAA*-87-0254. Computational aeroacoustics of propeller noise in the near and far field.
14. A. S. LYRINTZIS and A. R. GEORGE 1987 *American Helicopter Society National Specialists' Meeting on Aerodynamics and Aeroacoustics*, 25–27 *February, Arlington, Texas*. Transonic blade-vortex interactions: the far field.

Note: Unfortunately, owing to an oversight, the next two letters were originally published separately.—Hawkings in *JSV* **132**(1), 160 and Farassat and Myers in *JSV* **132**(3), 511. They are published again together in this issue, as originally planned.

COMMENTS ON "EXTENSION OF KIRCHHOFF'S FORMULA TO RADIATION FROM MOVING SURFACES" (by F. Farassat and M. K. Myers, *Journal of Sound and Vibration* **123**(3), 451–460).

The authors have discussed how Kirchhoff's formula can be extended to moving and deforming surfaces, and cited two previous papers covering this subject by Morgans (1930) [1] and Ffowcs Williams and Hawkings (1969) [2]. (Incidentally, another relevant paper not cited is that of Khromov (1963) [3], who used a novel four-dimensional method.) Farassat and Myers commented that Ffowcs Williams and Hawkings stated that the Morgans paper is in error without clarifying the nature of the error, whereas in their opinion it is correct.

In fact, the error mentioned by ourselves was just the same ambiguity of interpretation in the Morgans result that Farassat and Myers now spell out in their paper. The fact that the metric $g_{(2)}$ is a function of time and must lie within the retarded time operator is crucial. It cannot be taken outside the operation and converted back to an element of physical surface dS, as implied by Morgans. The difference would show up in numerical schemes for the direct computation of the integrals.

Thus both Farassat and Myers, and ourselves, have recognized the same defect in the Morgans paper; they regarded it as an ambiguity of interpretation, we regarded it as an error.

Westland System Assessment Limited,
*Yeovil, BA*21 4*DQ, UK*

D. L. HAWKINGS

(*Received* 10 *November* 1988)

REFERENCES

1. W. R. MORGANS 1930 *Philosophical Magazine* **9**, 141–161. The Kirchhoff formula extended to a moving surface.
2. J. E. FFOWCS WILLIAMS and D. L. HAWKINGS 1969 *Philosophical Transactions of the Royal Society, London* **264A**, 321–342. Sound generation by turbulence and surfaces in arbitrary motion.
3. V. A. KHROMOV 1963 *Soviet Physics—Acoustics* **9**, 68–71. Generalization of Kirchhoff's theorem for the case of a surface moving in an arbitrary way.

0022-460X/89/160189+01 $03.00/0

© 1989 Academic Press Limited

Journal of Sound and Vibration (1989) **133**(1), 190

AUTHORS' REPLY

The authors thank Dr Hawkings for clarifying the comment about Morgans' derivation of Kirchhoff's formula for moving surfaces in the joint paper with Ffowcs Williams (*Philosophical Transactions of the Royal Society*, 1969). We chose the word "ambiguity" rather than "error" because it is clear from Morgans' derivation that he was aware of the subtlety mentioned in our paper. Had he not known about it, his main result would have been erroneous, and it is not so. Furthermore, what Ffowcs Williams and Hawkings have presented as the correct general Kirchhoff formula requires considerable algebraic manipulation in order to be put into the form presented by Morgans. This makes it difficult to compare the two analyses. We feel that the use of the word "error" about a result that is fundamentally correct is likely to divert interested readers from studying Morgans' excellent and beautifully written article.

The authors also appreciate Dr Hawkings' calling their attention to Khromov's 1963 article. This paper was also commented upon in the 1969 joint papers of Ffowcs Williams and Hawkings. Khromov's method is based on converting the wave equation into a Laplace equation by taking $x_4 = \mathrm{i}ct$, where $\mathrm{i} = \sqrt{-1}$. We agree with Ffowcs Williams and Hawkings that there is a fundamental error in Khromov's work, early in the derivation. Since the nature of this error is also not pointed out in their paper, we take this opportunity to do so for completeness. In equation (19) of Khromov's paper an integration over a surface S in four dimensions is split into an integration on x_4 (essentially the source time) followed by one on the physical moving surface s. Since each element of the surface s emits a signal at a different source time, this interpretation of the surface integral over S is incorrect. This point is, of course, related to the ambiguity mentioned about some of Morgans' examples. The final result of Khromov's paper is therefore in error. The authors believe that, while Khromov's derivation may be corrected, his introduction of the imaginary time-like co-ordinate is counter-intuitive and can lead to errors such as that mentioned here.

NASA Langley Research Center,
Hampton, Virginia 23665, *U.S.A.*

F. FARASSAT

The George Washington University,
JIAFS,
Hampton, Virginia 23665, *U.S.A.*

M. K. MYERS

(*Received* 12 *January* 1989)

0022-460X/89/160190+01 $03.00/0

© 1989 Academic Press Limited

THE KIRCHHOFF FORMULA

FOR A

SUPERSONICALLY MOVING SURFACE

F. Farassat
Fluid Mechanics and Acoustics Division
NASA Langley Research Center, Hampton, Virginia

M. K. Myers
The George Washington University (JIAFS)
Hampton, Virginia

Presented at First Joint CEAS/AIAA
Aeroacoustics Conference (16th AIAA Conference)
June 12-15, 1995, Munich, Germany

THE KIRCHHOFF FORMULA FOR A SUPERSONICALLY MOVING SURFACE

F. Farassat
Fluid Mechanics and Acoustics Division
NASA Langley Research Center, Hampton, Virginia

M. K. Myers
The George Washington University (JIAFS)
Hampton, Virginia

ABSTRACT

The Kirchhoff formula for radiation from stationary surfaces first appeared in 1882, and it has since found many applications in wave propagation theory. In 1930, Morgans extended the formula to apply to surfaces moving at speeds below the wave propagation speed; we refer to Morgans' formula as the subsonic formulation. A modern derivation of Morgans' result was published by Farassat and Myers in 1988, and it has now been used extensively in acoustics, particularly for high speed helicopter rotor noise prediction. Under some common conditions in this application, however, the appropriate Kirchhoff surface must be chosen such that portions of it travel at supersonic speed. The available Kirchhoff formula for moving surfaces is not suitable for this situation. In the current paper we derive the Kirchhoff formula applicable to a supersonically moving surface using some results from generalized function theory. The new formula requires knowledge of the same surface data as in the subsonic case. Complications that arise from apparent singularities in the new formulation are discussed briefly in the paper.

1. INTRODUCTION

Since its first publication in 1882, the Kirchhoff formula has played a fundamental role in the study of optical, acoustic and electromagnetic wave propagation.[1-2] The formula provides a representation of solutions to the homogeneous wave equation in regions interior or exterior to a closed surface in terms of data specified on the surface itself. Here we will call this surface the Kirchhoff surface. The original formula applies only to a stationary Kirchhoff surface. In many circumstances, however, it is convenient to have an analogous formula applicable to a moving surface, and such a result was derived by Morgans,[3] who extended the original formula of Kirchhoff to include surfaces moving at speeds below the wave speed in the propagation medium; we refer to Morgans' result as the subsonic Kirchhoff formula. A modern derivation this formula based on generalized function theory and in a form suitable for application was given by the authors in 1988.[4]

In addition to the fact that representation formulas of the Kirchhoff type are of interest from a fundamental analytical standpoint, they have in recent years also assumed importance as computational tools for use in conjunction with CFD calculations. One illustration of the utility of the subsonic Kirchhoff formula is its successful application by Lyrintzis[5] to helicopter noise prediction. Here unsteady aerodynamic calculations were performed in the near field of a helicopter rotor in a reference frame fixed to the rotating blades (see fig. 1). These then provided data on a blade-fixed Kirchhoff surface like that indicated in fig. 1 for subsequent application of the subsonic Kirchhoff formula to determine the noise radiated by the blade. This particular application, however, is limited by the fact that under some commonly occurring conditions the shock system associated with a high speed helicopter rotor can extend well beyond the tip region, a phenomenon that has been called delocalization.[6] To apply a (linear) Kirchhoff formula in this case requires that the entire shock system be included inside the Kirchhoff surface. Because part of the surface thus travels at supersonic speed, the available Kirchhoff formula for moving surfaces is not suitable.

The primary difficulty with the subsonic formula is the appearance of the Doppler factor $1-M_r$ in the denominator of the integrands, where M_r is the component of the surface Mach number in the radiation direction. For supersonic surfaces, there exist directions in which $M_r=1$, and thus singularities appear in the subsonic Kirchhoff formula. Here we derive a new Kirchhoff formula that does not contain the Doppler singularity. The new formula is actually valid for all surface speeds, but, because it is somewhat complex to code for computer applications, its use is not recommended for Kirchhoff surfaces, or portions or Kirchhoff surfaces, moving subsonically. In this paper, therefore, we refer to the new formula as the supersonic Kirchhoff formula. The analysis is carried out with a view toward practical numerical implementation. Thus, the new formula is derived for an open surface panel considered as a portion of the closed Kirchhoff surface. This allows its use to be restricted to just those parts of the Kirchhoff surface that are actually moving at supersonic speed.

In the next section, the inhomogeneous source terms of the wave equation leading to the Kirchhoff formula are derived. In the following section, the solution of this wave equation is obtained which is valid for supersonically moving surfaces. This solution is the desired Kirchhoff formula. In the subsequent section the singularities associated with the new formula are briefly discussed. The main complications in the supersonic formulation are the existence of multiple emission times and the appearance of small or vanishing denominators in the algebraic expressions. We indicate how these complications can be overcome in applications.

2. THE INHOMOGENEOUS WAVE EQUATION

Our approach to deriving the supersonic Kirchhoff equation is similar to that of reference 4. The primary reference for the mathematics used in the derivation is a recent publication by the first author.[7] Let us assume that the

moving Kirchhoff surface is defined by $f(\vec{x},t)=0$ with $f>0$ in the exterior of the surface and $f<0$ in the interior. This function is selected in such a way that $|\nabla f|=1$ over the surface, which can always be done.[7] We are interested in radiation into the region exterior to the surface f=0. Let $\Phi(\vec{x},t)$ satisfy the homogeneous equation in this region:

$$\Box^2\Phi=\frac{1}{c^2}\frac{\partial^2\Phi}{\partial t^2}-\nabla^2\Phi=0 \tag{1}$$

in which c is the speed of sound. To find the inhomogeneous source terms of the wave equation leading to the Kirchhoff formula, we extend Φ to the entire three-dimensional space as follows:

$$\tilde{\Phi}(\vec{x},t)=\begin{cases}\Phi(\vec{x},t) & f>0\\ 0 & f<0\end{cases} \tag{2}$$

We now find $\bar{\Box}^2\tilde{\Phi}$ where $\bar{\Box}^2$ stands for the wave operator with generalized derivatives.

Using the rules of generalized differentiation,[7-10] we obtain

$$\frac{1}{c}\frac{\bar{\partial}\tilde{\Phi}}{\partial t}=\frac{1}{c}\frac{\partial\tilde{\Phi}}{\partial t}-M_n\Phi\,\delta(f) \tag{3-a}$$

$$\frac{1}{c^2}\frac{\bar{\partial}^2\tilde{\Phi}}{\partial t^2}=\frac{1}{c^2}\frac{\partial^2\tilde{\Phi}}{\partial t^2}-\frac{1}{c}M_n\frac{\partial\Phi}{\partial t}\delta(f)-\frac{1}{c}\frac{\partial}{\partial t}[M_n\Phi\,\delta(f)] \tag{3-b}$$

In eqs. (3) the bar over a derivative stands for generalized differentiation, and $M_n=v_n/c$ is the local normal Mach number of the surface f=0. The Dirac delta function with support on f=0 is denoted $\delta(f)$. The generalized Laplacian of $\tilde{\Phi}$ is similarly found as follows:

$$\bar{\nabla}\tilde{\Phi}=\nabla\tilde{\Phi}+\Phi\vec{n}\,\delta(f) \tag{4-a}$$

$$\bar{\nabla}^2\tilde{\Phi}=\nabla^2\tilde{\Phi}+\Phi_n\delta(f)+\nabla\cdot[\Phi\vec{n}\,\delta(f)] \tag{4-b}$$

Here $\vec{n}=\nabla f$ is the local unit outward normal and $\Phi_n=\vec{n}\cdot\nabla\Phi$ on $f=0$. From eqs. (3) and (4), and the fact that $\Box^2\tilde{\Phi}=0$, we find

$$\begin{aligned}\bar{\Box}^2\tilde{\Phi}&=\frac{1}{c^2}\frac{\bar{\partial}^2\tilde{\Phi}}{\partial t^2}-\bar{\nabla}^2\tilde{\Phi}\\ &=-\left(\frac{M_n}{c}\frac{\partial\Phi}{\partial t}+\Phi_n\right)\delta(f)-\frac{1}{c}\frac{\partial}{\partial t}[M_n\Phi\,\delta(f)]-\nabla\cdot[\Phi\vec{n}\,\delta(f)]\end{aligned} \tag{5}$$

The last two terms of this equation need further manipulations to make them suitable for the derivation of the supersonic Kirchhoff formula. We perform these manipulations below.

In applications, the Kirchhoff surface is first divided into panels (Fig. 2-a). Some of these panels travel at supersonic speed, so that the subsonic Kirchhoff formula is not suitable. We therefore, derive the new formula for a single panel. Let us assume that a panel on f=0 is defined by the equation of its edge curve, $\tilde{f}=0$. We assume that $\tilde{f}>0$ on the panel. We can always define $\tilde{f}$ in such a way that $\nabla\tilde{f}=\vec{v}$ where $\vec{v}$ is the local unit inward geodesic normal at the edge of the panel. The geodesic normal is tangent to the surface f=0 and is normal to the edge of the panel $f=\tilde{f}=0$ (see Fig. 2-b). For the open surface at this panel, the source terms of the wave equation in eq. (5) must be modified by the Heaviside function $H(\tilde{f})$ as follows:

$$\begin{aligned}\bar{\Box}^2\tilde{\Phi}&=-\left(\frac{M_n}{c}\frac{\partial\Phi}{\partial t}+\Phi_n\right)H(\tilde{f})\,\delta(f)\\ &-\frac{1}{c}\frac{\partial}{\partial t}[M_n\Phi H(\tilde{f})\,\delta(f)]-\nabla\cdot[\Phi\vec{n}H(\tilde{f})\,\delta(f)]\end{aligned} \tag{6}$$

Now we carry out the time differentiation and divergence in the last two terms of eq. (6). We have

$$\begin{aligned}\frac{1}{c}\frac{\partial}{\partial t}[M_n\Phi H(\tilde{f})\,\delta(f)]&=\frac{1}{c}\frac{\partial}{\partial t}(\underset{\sim}{M}_n\underset{\sim}{\Phi})H(\tilde{f})\,\delta(f)\\ &-M_nM_v\Phi\,\delta(f)\,\delta(\tilde{f})-\underset{\sim}{M}_n^2\underset{\sim}{\Phi}H(\tilde{f})\,\delta'(f)\end{aligned} \tag{7}$$

where a tilde under a function stands for the restriction of the function to the surface f=0.[7] The symbol $M_v=v_v/c$ is the local Mach number of the edge $f=\tilde{f}=0$ in the direction of the geodesic normal. Similarly, the last term in eq. (6) can be written as

$$\nabla\cdot[\Phi\vec{n}H(\tilde{f})\,\delta(f)]=-2H_f\Phi H(\tilde{f})\,\delta(f)+\underset{\sim}{\Phi}H(\tilde{f})\,\delta'(f) \tag{8}$$

where H_f is the local mean curvature of the surface f=0. After substituting eqs. (7) and (8) into eq. (6) and collecting terms, we get

$$\begin{aligned}\bar{\Box}^2\tilde{\Phi}&=-\left[\Phi_n+\frac{M_n}{c}\frac{\partial\Phi}{\partial t}+\frac{1}{c}\frac{\partial}{\partial t}(\underset{\sim}{M}_n\underset{\sim}{\Phi})-2H_f\Phi\right]H(\tilde{f})\,\delta(f)\\ &-(1-\underset{\sim}{M}_n^2)\underset{\sim}{\Phi}H(\tilde{f})\,\delta'(f)+M_nM_v\Phi\,\delta(f)\,\delta(\tilde{f})\end{aligned} \tag{9}$$

This is the desired form of the inhomogeneous source terms of the wave equation. In the next section, we give the solution of eq. (9) which is the supersonic Kirchhoff formula.

3. THE SUPERSONIC KIRCHHOFF FORMULA

Equation (9) is now written as

$$\begin{aligned}\bar{\Box}^2\tilde{\Phi}&=q_1(\vec{x},\tau)H(\tilde{f})\,\delta(f)+\underset{\sim}{q}_2(\vec{x},\tau)H(\tilde{f})\,\delta'(f)\\ &+q_3(\vec{x},\tau)\,\delta(\tilde{f})\,\delta(f)\end{aligned} \tag{10}$$

Note that q_2 is restricted to f=0 and hence is written as $\underset{\sim}{q}_2$.

Next we write $\tilde{\Phi}$ as the sum of three functions

$$\tilde{\Phi} = \Phi_1 + \Phi_2 + \Phi_3 \tag{11}$$

where these functions are the solutions of the wave equations

$$\bar{\Box}^2 \Phi_1 = q_1(\vec{x},t) H(\tilde{f})\, \delta(f) \tag{12-a}$$
$$\bar{\Box}^2 \Phi_2 = \underset{\sim}{q_2}(\vec{x},t) H(\tilde{f})\, \delta'(f) \tag{12-b}$$
$$\bar{\Box}^2 \Phi_3 = q_3(\vec{x},t)\, \delta(\tilde{f})\, \delta(f) \tag{12-c}$$

The solutions of these equations are given fully in reference 7 (see solutions of eqs. 4.23-b, e, f in Ref. 7). Here we utilize these results directly and refer readers to the original source.

The solution of eq. (12-a) is given by eq. (4.34) of reference 7 as follows:

$$4\pi\, \Phi_1(\vec{x},t) = \int_{\substack{F=0 \\ \tilde{F}>0}} \frac{Q_1}{r\Lambda} d\Sigma \tag{13}$$

where $Q_1 = [q_1(\vec{y},\tau)]_{ret} = q_1(\vec{y}, t - r/c)$, $r = |\vec{x} - \vec{y}|$, $F(\vec{y};\vec{x},t) = [f(\vec{y},\tau)]_{ret}$, $\tilde{F}(\vec{y};\vec{x},t) = [\tilde{f}(\vec{y},\tau)]_{ret}$ and

$$\Lambda^2 = 1 + M_n^2 - 2M_n \cos\theta \tag{14}$$

Here M_n is local normal Mach number on the panel and $\cos\theta = \vec{n}\cdot\hat{f}$, where $\vec{\hat{f}} = (\vec{x} - \vec{y})/r$ is the unit radiation vector. In eq. (13) $d\Sigma$ is the element of surface area of the surface $F=0, \tilde{F}>0$. This is the surface formed by the curves of intersection of the collapsing sphere $r = c(t-\tau)$, $(\vec{x},t)$ fixed, with the panel in motion as the source time τ increases from $-\infty$ to t. Figure 3 illustrates the construction of the Σ-surface for a panel.

The solution of eq. (12-b) is given by eq. (4.42) of reference 7 in the form

$$4\pi\, \Phi_2(\vec{x},t) = \int_{\substack{F=0 \\ \tilde{F}>0}} \left[-\frac{1}{\Lambda}\frac{\partial}{\partial N}\left(\frac{\underset{\sim}{Q_2}}{r\Lambda}\right) + \frac{2H_F Q_2}{r\Lambda^2} \right] d\Sigma - \int_{\substack{F=0 \\ \tilde{F}=0}} \frac{Q_2 \cot\theta'}{r\Lambda^2} dL \tag{15}$$

where $Q_2 = [q_2(\vec{y},\tau)]_{ret}$ and we have introduced the following symbols:

$$\frac{\partial}{\partial N} = \vec{N}\cdot\nabla, \qquad \vec{N} = \frac{\vec{n} - M_n \vec{\hat{f}}}{\Lambda} = \frac{\nabla F}{|\nabla F|} \tag{16-a,b}$$

$$\cos\theta' = \vec{N}\cdot\vec{N}', \qquad \vec{N}' = \frac{\vec{v} - M_v \vec{\hat{f}}}{\tilde{\Lambda}} = \frac{\nabla \tilde{F}}{|\nabla \tilde{F}|} \tag{16-c,d}$$

$$\tilde{\Lambda}^2 = 1 + M_v^2 - 2M_v \cos\tilde{\theta} \tag{16-e}$$

$$\cos\tilde{\theta} = \vec{v}\cdot\vec{\hat{f}} \tag{16-f}$$

In eq. (15) we have also denoted the mean curvature on the Σ-surface by H_F, and dL is the element of the length of the edge of the Σ-surface. Below we will see why we must retain the restriction sign (~) in $\underset{\sim}{Q_2}$ in the integrand of the surface integral.

The solution of eq. (12-c) is given by eq. (4.49) of reference 7 as follows:

$$4\pi\, \Phi_3(\vec{x},t) = \int_{\substack{F=0 \\ \tilde{F}=0}} \frac{Q_3}{r\Lambda_0} dL \tag{17}$$

where $Q_3 = [q_3(\vec{y},\tau)]_{ret}$ and

$$\Lambda_0 = |\nabla F \times \nabla \tilde{F}| = \Lambda\tilde{\Lambda}\sin\theta' \tag{18}$$

After combining the eqs. (13), (15) and (17) we get

$$4\pi\tilde{\Phi}(\vec{x},t) = \int_{\substack{F=0 \\ \tilde{F}>0}} \frac{1}{r\Lambda}\left[Q_1 + \frac{2H_F}{\Lambda} Q_2 + \frac{\vec{N}\cdot\nabla\Lambda}{\Lambda^2} Q_2 - \frac{\vec{N}\cdot\nabla \underset{\sim}{Q_2}}{\Lambda} \right] d\Sigma + \int_{\substack{F=0 \\ \tilde{F}>0}} \frac{\vec{N}\cdot\nabla r}{r^2\Lambda^2} Q_2\, d\Sigma + \int_{\substack{F=0 \\ \tilde{F}=0}} \frac{1}{r\Lambda_0}\left[Q_3 - \frac{\tilde{\Lambda}\cos\theta'}{\Lambda} Q_2 \right] dL \tag{19}$$

In eq. (19) we have explicitly performed the derivative $\partial/\partial N$ in eq. (15) and separated the near and far field surface integrals. We note that

$$\vec{N}\cdot\nabla \underset{\sim}{Q_2} = \left[\vec{N}\cdot\nabla \underset{\sim}{q_2}\right]_{ret} - \frac{1}{c}\left[\vec{N}\cdot\nabla r \dot{q}_2\right]_{ret} \tag{20}$$

where the symbol $\dot{q}_2$ is used for $\partial q_2(\vec{y},\tau)/\partial\tau$. From eq. (16-b), we have

$$\vec{N} = \frac{1}{\Lambda}\left[\vec{n} - M_n(\vec{n}\cos\theta + \vec{t}_1 \sin\theta)\right] = \frac{1}{\Lambda}(1 - M_n\cos\theta)\vec{n} + \frac{M_n \sin\theta}{\Lambda}\vec{t}_1 \tag{21}$$

in which $\vec{t}_1$ is the unit vector along the projection of $\vec{\hat{f}}$ on the local tangent plane of f=0. Since $\partial \underset{\sim}{q_2}/\partial n = 0$ (this a property of the restriction[7]), we get

$$\vec{N}\cdot\nabla q_2 = \frac{M_n \sin\theta}{\Lambda}\frac{\partial q_2(\bar{y},\tau)}{\partial \sigma_1} \tag{22}$$

where $\partial/\partial\sigma_1$ is the directional derivative in the direction of $\vec{t}_1$ (keeping τ fixed). We also have

$$\vec{N}\cdot\nabla r = \frac{M_n - \cos\theta}{\Lambda} \tag{23}$$

which, when substituted in eq. (20), gives

$$\vec{N}\cdot\nabla Q_2 = \frac{M_n \sin\theta}{\Lambda}\frac{\partial Q_2}{\partial \sigma_1} + \frac{\cos\theta - M_n}{c\Lambda}\dot{Q}_2 \tag{24}$$

In eq. (24), $\dot{Q}_2$ stands for $(\partial q_2/\partial\tau)_{ret}$ and the directional derivative again is calculated keeping τ fixed. Finally, after using eqs. (23) and (24) in eq. (19), we get

$$\begin{aligned} 4\pi\,\tilde{\Phi}(\vec{x},t) = &\int_{\substack{F=0\\ \dot{F}>0}} \frac{1}{r\Lambda}\left[Q_1 + \left(\frac{2H_F}{\Lambda} + \frac{\vec{N}\cdot\nabla\Lambda}{\Lambda^2}\right)Q_2 \right. \\ &\left. - \frac{M_n \sin\theta}{\Lambda^2}\frac{\partial Q_2}{\partial \sigma_1} - \frac{\cos\theta - M_n}{c\Lambda^2}\dot{Q}_2\right] d\Sigma \\ &- \int_{\substack{F=0\\ \dot{F}>0}} \frac{\cos\theta - M_n}{r^2\Lambda^3} Q_2\, d\Sigma + \int_{\substack{F=0\\ \dot{F}=0}} \frac{1}{r\Lambda_0}\left[Q_3 - \frac{\tilde{\Lambda}\cos\theta'}{\Lambda} Q_2\right] dL \end{aligned} \tag{25}$$

Equation (25) is the supersonic Kirchhoff formula and is the main result of this paper. We will discuss the above result further below.

First, however, we remark on the significance of utilizing the restriction of the function q_2 to the surface f=0 in the derivation of eq. (25). The key property of the restriction is that $\partial q_2/\partial n = 0$, which allows the derivative in the direction $\vec{N}$ in eq. (15-b) to be evaluated very simply (see eq. (22)). If we had not introduced the restriction, the ultimate result would still be eq. (25), but it would contain a number of extra terms arising from unnecessary differentiation of q_2 in the direction $\vec{n}$. The extra terms, of course, cancel one another, but is difficult to recognize the cancellation in the form in which the terms arise in eq. (25). Using q_2 leads directly to the above result which the authors believe is the simplest possible expression of the supersonic Kirchhoff formula.

One important fact that we point out here is that eq. (25) is valid for a Kirchhoff surface in arbitrary motion, including motion at subsonic speed. However, we do not recommend its use for subsonic speeds because the formula presented by the authors in reference 4 is much more efficiently applied for computation.

4. ANALYSIS OF THE MAIN RESULT

We first check to see if we recover the classical Kirchhoff formula from eq. (25) when the surface is stationary. We assume a closed surface described by $f(\bar{y}) = 0$. In this case there is no line integral and we have

$$F(\bar{y};\vec{x},t) = f(\bar{y}) = 0 \tag{26-a}$$

$$M_n = 0\,, \qquad \Lambda = 1 \tag{26-b,c}$$

$$H_F = H_f\,, \qquad q_1 = -\Phi_n - 2H_f\Phi \tag{26-d,e}$$

$$q_2 = \Phi\,, \qquad q_3 = 0\,, \qquad d\Sigma = dS \tag{26-f,g,h}$$

where dS is the element of the surface area of f=0. Substitution of these results in eq. (25), yields

$$4\pi\,\tilde{\Phi}(\vec{x},t) = \int_{f=0} \frac{1}{r}\left[c^{-1}\cos\theta\,\dot{\Phi} - \Phi_n\right]_{ret} dS + \int_{f=0} \frac{\Phi\cos\theta}{r^2} dS \tag{27}$$

This is the classical Kirchhoff formula.[1,2] Thus this aspect of consistency of our main result has been established. It is evident that eq. (25) depends on Φ, Φ_n and $\dot{\Phi}$ on the Kirchhoff surface f=0. This is, of course, expected. Note that $\partial Q_2/\partial\sigma_1$ involves $\partial\Phi/\partial\sigma_1$, which is obtained from knowledge of Φ on f=0.

We will now discuss the problem of singularities of eq. (25). The quantity Λ appears in every term of the denominator and produces a singularity when Λ=0. The singularity $\Lambda_0 = 0$ appears in the line integral of eq. (25) if the conditions discussed in reference 11 are satisfied. When Λ=0, the collapsing sphere is tangent to the Kirchhoff surface f=0 at a point where M_n=1. The Σ surface in the vicinity of this point is very complicated with a possible mean curvature singularity. This case requires further analysis which we will not pursue at present. For now we will indicate a practical method to get around this problem. Assume that the Kirchhoff surface is chosen to have a shape like that of a biconvex airfoil such that there are no points on the surface at which M_n=1. Then we only have to be concerned with the singularities of the line integral in eq. (25) on the leading and trailing edges of the Kirchhoff surface. However, the integrand of the line integral of eq. (25) is precisely eq. (17-c) of reference 11 with $\rho' c^2$ replaced by Φ. An analysis identical to that of reference 11 shows that the singularity of the line integral in eq. (25) is integrable so long as Φ is continuous in the vicinity of the singular point. But this condition is always satisfied in practice so that there will be no numerical problems in using eq. (25) for the proposed Kirchhoff surface.

5. CONCLUDING REMARKS

In this paper we have derived a Kirchhoff formula that describes solutions of the homogeneous wave equation exterior to a surface in arbitrary motion. The formula is specifically designed for practical computation of radiation from surfaces in supersonic motion. Because surfaces moving at subsonic speeds are more efficiently treated using an earlier result, the new formula is derived for an open surface; it is recommended that it be used only on surface

panels that are actually moving supersonically. The new formula is expressed in a relatively simple form in terms of surface data and of easily calculated geometric and kinematic properties of the moving Kirchhoff surface. It is complicated somewhat by the existence of singularities that occur under certain conditions in supersonic motion, but these singularities are shown to present no difficulties in numerical implementation of the formula.

REFERENCES

1. D. S. Jones: *The Theory of Electromagnetism*, 1964, Pergamon Press, Oxford.
2. A. D. Pierce: *Acoustics - An Introduction to Its Physical Principles and Applications*, 1981, McGraw Hill, New York.
3. W. R. Morgans: "The Kirchhoff Formula Extended to a Moving Surface," *Philosophical Magazine*, 1930, Vol. 9, pp. 141-161.
4. F. Farassat and M. K. Myers: "Extension of Kirchhoff's Formula to Radiation from Moving Surfaces," *Journal of Sound and Vibration*, 1988, Vol. 123(3), pp. 451-460.
5. Y. Xue and A. S. Lyrintzis: "Rotating Kirchhoff Method for Three-Dimensional Transonic Blade-Vortex Interaction Hover Noise," *AIAA Journal*, 1994, Vol. 32(7), pp. 1350-1359.
6. F. H. Schmitz: Rotor Noise, Chap. 2 of *Aeroacoustics of Flight Vehicles: Theory and Practice, Vol. 1, Noise Sources*, NASA RP-1258, 1991, pp. 65-149.
7. F. Farassat: "An Introduction to Generalized Functions with Applications in Aerodynamics and Aeroacoustics," NASA TP-3428, 1994.
8. D. S. Jones: *The Theory of Generalised Functions*, 2nd Ed., 1982, Cambridge University Press.
9. I. M. Gel'fand and G. E. Shilov: *Generalized Functions*, Vol. 1, *Properties and Operations*, 1964, Academic Press.
10. R. P. Kanwal: *Generalized Functions-Theory and Technique*, 1983, Academic Press.
11. F. Farassat and M. K. Myers: "Line Source Singularity in the Wave Equation and Its Removal by Quadrupole Sources - A Supersonic Propeller Noise Problem," *Theoretical and Computational Acoustics*, Vol. 1, D. Lee, J. E. Ffowcs Williams, A. D. Pierce and M. H. Schultz (Eds.), 1994, World Scientific Publishing.

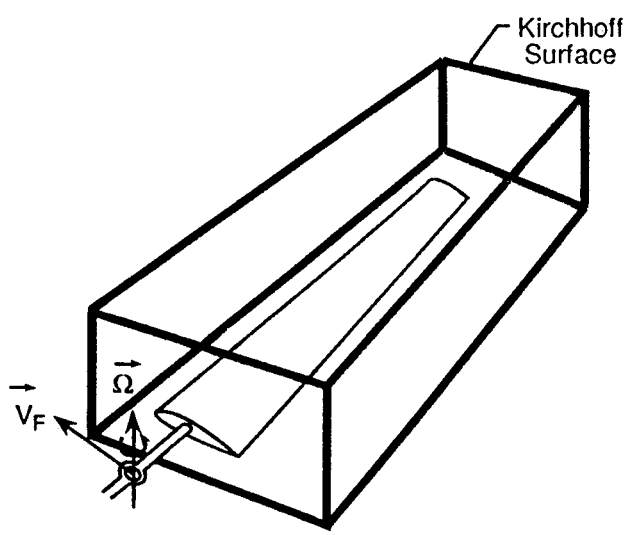

Fig. 1 Rotating Kirchhoff surface for helicopter blade.

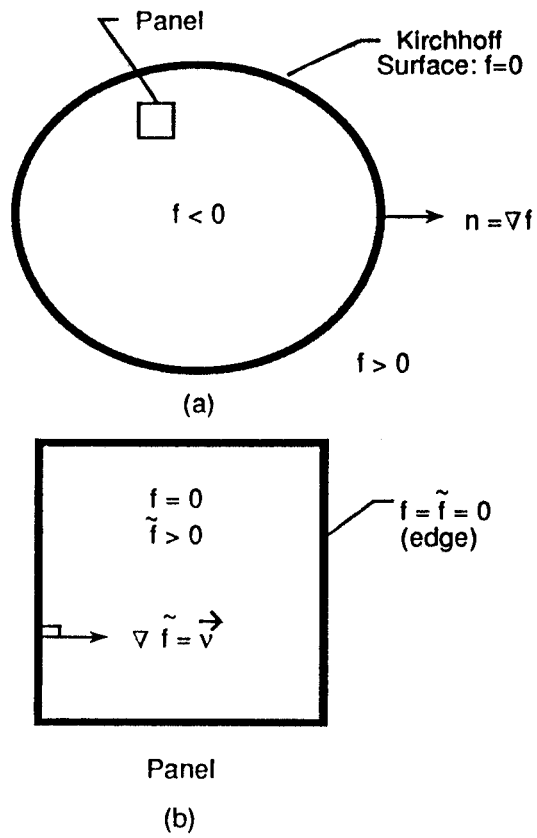

Fig. 2 Open panel on Kirchhoff surface.

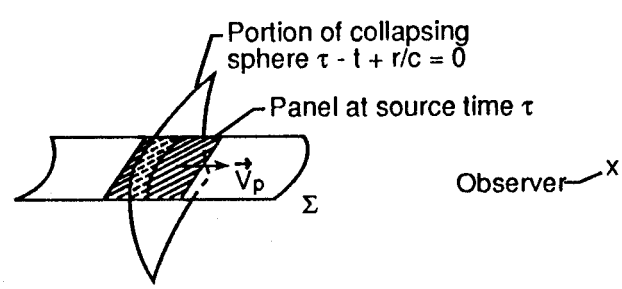

Fig. 3 Construction of Σ-surface for panel.

Appendix B

The Mean Curvature of Σ-Surface Needed in the Supersonic Kirchhoff Formula

The Mean Curvature H_F of Σ-Surface

$$H_F = -\frac{M_n}{r\Lambda}\left(1-\frac{\sin^2\theta}{2\Lambda^2}\right)+\frac{(1-M_r)^2}{\Lambda^3}H_f+\frac{1-M_r}{2\Lambda^3}(2\vec{\hat{r}}_t\cdot\vec{q}+\kappa_1\tilde{\lambda}^1\tilde{\gamma}^1+\kappa_2\tilde{\lambda}^2\tilde{\gamma}^2)$$
$$+\frac{\sin^2\theta}{2\Lambda^3}\left(\frac{1}{c}\dot{M}_n+M^2\kappa_r\right)+\frac{1}{2\Lambda^3}(\vec{\gamma}\cdot\vec{q})(\vec{\lambda}\cdot\vec{\hat{r}}_t)$$

$\Lambda = (1+M_n^2-2M_n\cos\theta)^{1/2}$, $\cos\theta = \vec{n}\cdot\vec{\hat{r}}$, $\vec{\hat{r}} = \frac{\vec{x}-\vec{y}}{r}$, $M = |\vec{M}|$,

$\vec{\hat{r}}_t = \vec{\hat{r}}-\vec{n}\cos\theta$, $\vec{M}_t = \vec{M}-M_n\vec{n}$ ($\vec{\hat{r}}_t$ and $\vec{M}_t$ are projections of $\vec{\hat{r}}$ and $\vec{M}$ on local tangent plane to $f=0$), κ_1 and κ_2 local principal curvatures of $f=0$, κ_r local normal curvature of $f=0$ along $\vec{\hat{r}}_t$, H_f local mean curvature of $f=0$,

$\vec{q} = \vec{n}\times\vec{\omega}$, $\vec{\omega}$ angular velocity, $\vec{\gamma} = \vec{n}\times\vec{\hat{r}}_t$, $\vec{\lambda} = \vec{n}\times\vec{M}_t$,

$\dot{M}_n = \vec{n}\cdot\dot{\vec{M}}$, $(\tilde{\lambda}^1,\tilde{\lambda}^2)$ and $(\tilde{\gamma}^1,\tilde{\gamma}^2)$ components of $\vec{\lambda}$ and $\vec{\gamma}$ in principal directions with respect to unit basis vectors, respectively.

F. Farassat, Aeroacoustics Branch
Fluid Mechanics and Acoustics Division
NASA Langley Research Center
Hampton, Virginia